ITEM	PART NO.	DESCRIPTION	QTY
1	E11865	WASHER, SPRING, M6, PHOS. BRONZE	2
2	E11887	SCREW, M/C, PAN HD, M6 x 1 x 15, BRASS	1
3	E11889	NUT, HEX, M6 x 1, BRASS	2
4	KI10304	WASHER, SPRING, 5/16" A2-70SS	4
5	KI11071	SCREW, SOCKET SET,10-32 x 3/8" Lg. A4-70SS	1
6	KI12300	O-RING	1
7	KI13226	MOUNTING, SHOCK, DH21 MOTOR	4
8	KI13821	NUT, 5/16"-18, A2-70SS	4
9	KI14742	DH21, HTR/SCRUBBER FRAME	1
10	KI14749	BLADE, FAN, 3.75" OD	1
11	KI14783	GUARD ASSEMBLY, FAN	1
12	KI14792	GROMMET, SCRUBBER, DH21	1
13	KI14904RF	MOTOR ASSEMBLY, DH21 SCRUBBER/HEATER	1
14	KI17215	GASKET, NEW TYPE, DH21	1
15	FB275	SCREW, GRUB, M4 x 10 LG.	1
16	KI17170	NAMEPLATE, KINERGETICS/DIVEX, 70mm x 40mm	1
17	FB35260	SCREW, HAMMER DRIVE, NO.4 x 3/16" LNG, A2 STAINLESS	4

ISOMETRIC VIEW

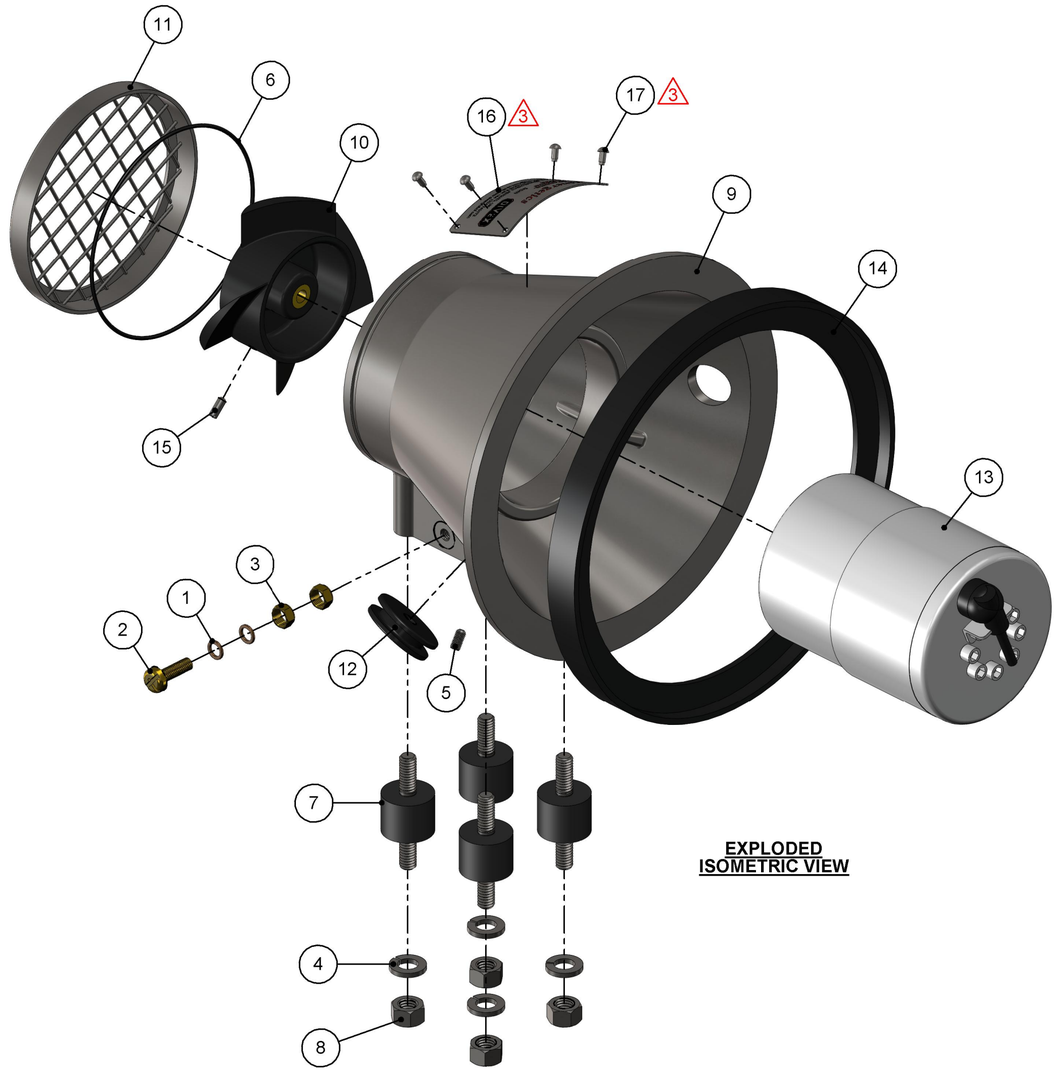

EXPLODED ISOMETRIC VIEW

DIVEX OWNS THE COPYRIGHT OF THIS DOCUMENT AND ANY DESIGN RIGHT HEREIN. IT IS SUPPLIED IN CONFIDENCE AND MUST NOT BE USED FOR ANY PURPOSE OTHER THAN THAT FOR WHICH IT IS SUPPLIED AND MUST NOT BE REPRODUCED WITHOUT PERMISSION IN WRITING FROM THE OWNERS.

NOTES

NAMEPLATE TO BE POSITIONED CENTRALLY ON CONICAL SURFACE.

3 - DENOTES CHANGES MADE AT THIS REVISION.

ALL DIMENSIONS SHOWN ARE IN MM (UOS)
ALL DIMENSIONS BEFORE PLATING (UOS)
REMOVE ALL SHARP EDGES AND BURRS

DIMENSIONAL TOLERANCES

MACHINING		FABRICATION	
NO DECIMAL PLACES	±1.0	SIZE >0 <100	±0.5
ONE DECIMAL PLACE	±0.2	SIZE >100 <500	±1.5
TWO DECIMAL PLACE	±0.05	SIZE >500	±3.0
ANGULAR TOLERANCE	±0.5°	ANGULAR TOLERANCE	±0.5°

MATERIAL: REFER TO PARTS LIST

FINISH: N/A

THIRD ANGLE PROJECTION

REV	DESCRIPTION	ECN No	BY	DATE	AUTH.BY
R06					
R05					
R04					
R03	NAMEPLATE ADDED	13430	DR	20/10/10	GMcC
R02	KI12514 REPLACED WITH FB275	13179	SJ	22/01/10	GMcC
R01	CONNECTOR REMOVED. EARTHING COMPONENTS ADDED	10574	GR	12/05/08	RTW
R00	ISSUED FOR MANUFACTURE		KB	17/04/08	RTW

DO NOT SCALE DRAWING

TITLE: **BLOWER HOUSING ASSEMBLY, 4300 RPM, 1A MOTOR, DH21, DIRECT MOUNTING**

DRAWING No.: **KI170221S1** REV: **R03**

PART No.: KI17022RD PRODUCT / PROJECT No.: KINERGETICS

SIZE: A2 SCALE: 1:2 SHT 1 OF 1

DIVEX
DIVEX LIMITED
ENTERPRISE DRIVE
WESTHILL
ABERDEEN
AB32 6TQ
UNITED KINGDOM
Tel : +44(0)1224 740145
Fax : +44(0)1224 740172
email : info@divexglobal.com
www.divexglobal.com