ITEM NO.	PART NO.	DESCRIPTION	QTY.
1	FN136	NUT, CLINCH, CSK, SERRATED, 2.5-4MM, ST.STEEL, M6	15
2	KI10633301	LATCH, CAM, ADJUSTABLE TENSION, STAINLESS STEEL	6
3	E15602	RIVET,POP, 3.2 DIA X 2.5-4.5 GRIP	16
4	KI13475	PLATE,SUPPORT,HCU	3
5	KI14513	FRAME, PLENUM, HORIZONTAL, HCU 3/6	1
6	KI14655	GASKET, PLENUM, HCU 3/6	1
7	KI40036312	FRAME, PLENUM, VERTICAL, 3/4 & 3/6	1
8	KI40036313	SLIDE ASSEMBLY, BY-PASS	1
9	KI40036305	BOSS, VALVE MOUNTING, CONDENSATE DRAIN, HCU 3/*	1
10	KI40036316	PAD, RUBBER, SCRUBBER BOX LOCATION	1

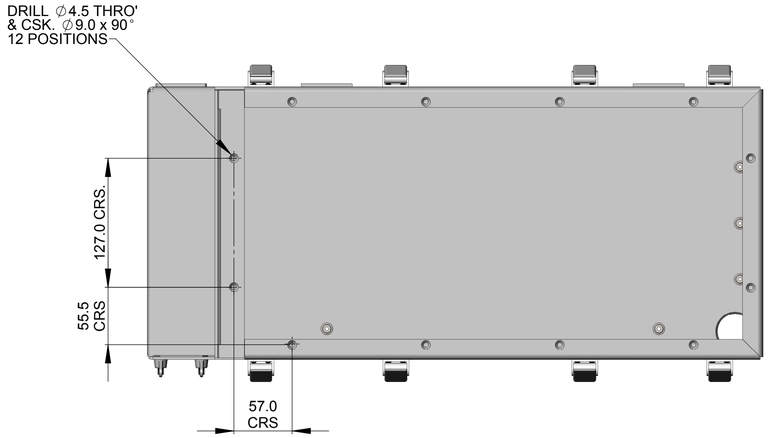

GASKET HIDDEN FOR CLARITY

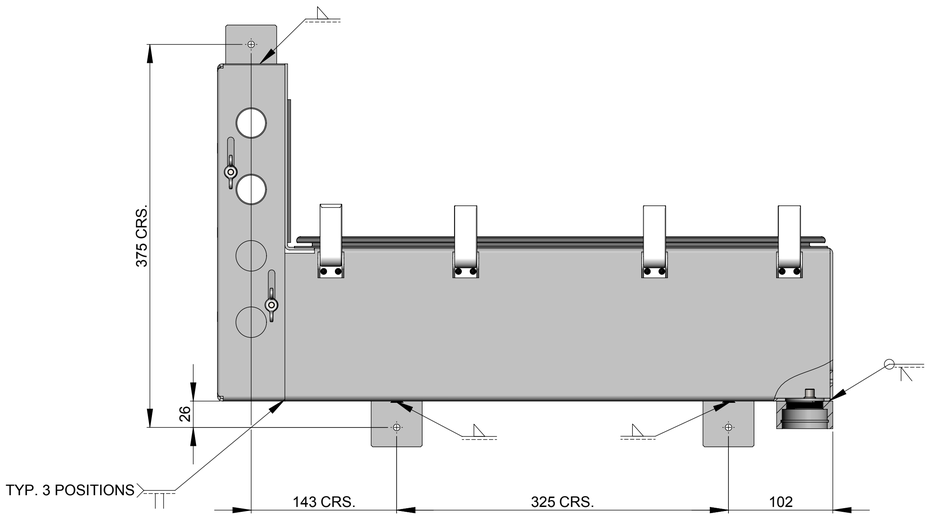

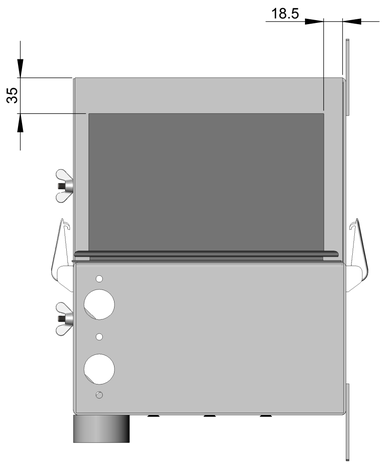

WELDING DETAIL/SUPPORT PLATE POSITION

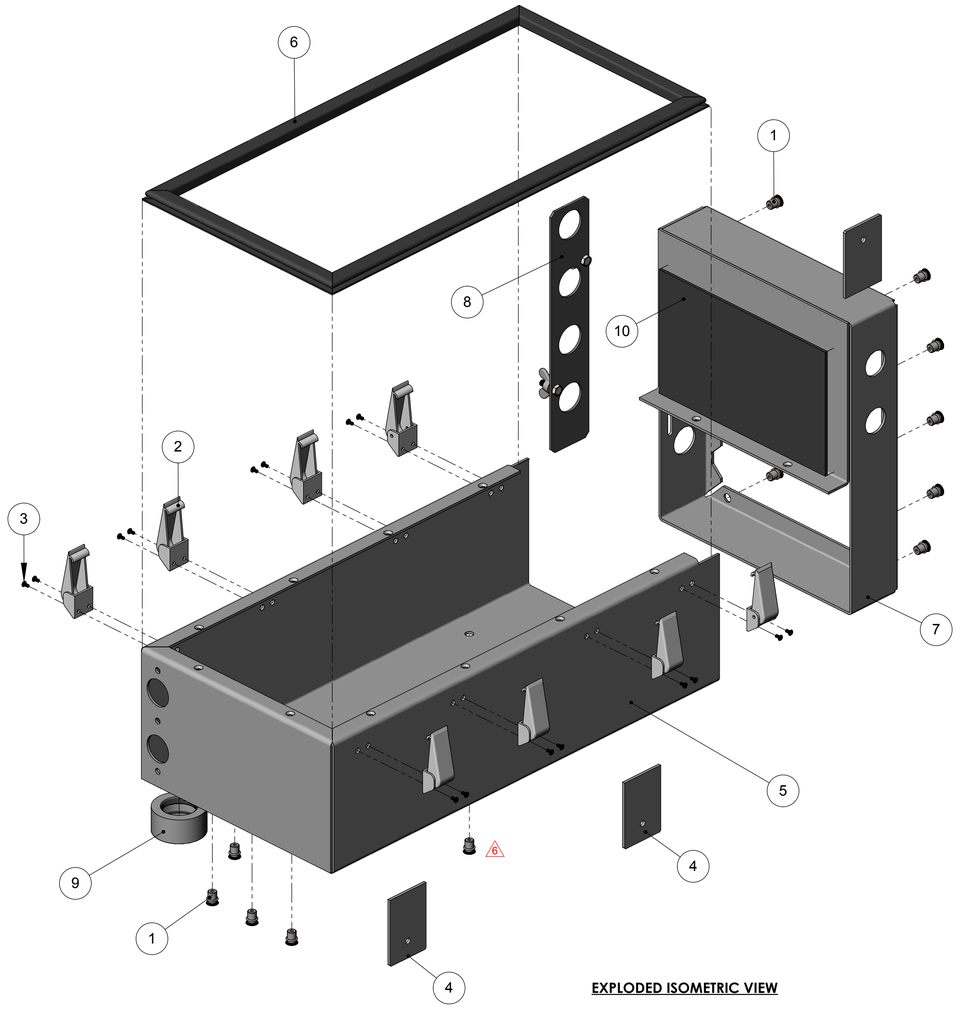

EXPLODED ISOMETRIC VIEW

NOTES:

MATERIAL: REFER TO PARTS LIST

FINISH: N/A

ALL DIMENSIONS ARE IN mm (UOS)
ALL DIMENSIONS BEFORE PLATING (UOS)
REMOVE ALL SHARP EDGES AND BURRS

MACHINING TOLERANCE		FABRICATION TOLERANCE	
NO DECIMAL PLACE	±1.0	>0 <100	±0.5
ONE DECIMAL PLACE	±0.2	>100 <500	±1.5
TWO DECIMAL PLACE	±0.05	>500	±3.0
ANGULAR TOLERANCE	±0.5°		

DENOTES CHANGES MADE AT THIS REVISION

REV	DESCRIPTION	ECN	BY	DATE	AUTH.
R06	FB113 & FW123 REMOVED & ITEMS 1, & 5 QTYS UPDATED	20182	ZD	08/11/16	AN
R05	K110875 REPLACED WITH E15602	16264	MJ	14/02/14	MS
R04	RUBBER PAD ADDED	12310	GC	07/04/09	RTW
R00	ISSUED FOR MANUFACTURE		GC	23/05/06	RTW

THIRD ANGLE PROJECTION

DO NOT SCALE DRAWING

JFD OWNS THE COPYRIGHT OF THIS DOCUMENT AND ANY DESIGN RIGHT HEREIN. IT IS SUPPLIED IN CONFIDENCE AND MUST NOT BE USED FOR ANY PURPOSE OTHER THAN THAT FOR WHICH IT IS SUPPLIED AND MUST NOT BE REPRODUCED WITHOUT PERMISSION IN WRITING FROM THE OWNERS.

TITLE: **PLENUM ASSEMBLY, HCU 3/6**

DRAWING NO: **P21717S1** REV: **R06**

PART NO: KI40036101

PRODUCT / PROJECT No.: KINERGETICS

SIZE: A1 SCALE (UOS): 1:3 SHEET: 1 of 1

JFD
JFD WESTHILL
ENTERPRISE DRIVE,
WESTHILL, ABERDEEN,
AB32 6TQ, UK
TEL: +44 (0)1224 740145
E: enquiries@jfdglobal.com
W: jfdglobal.com