ITEM NO.	PART No.	DESCRIPTION	Qty.
1	LA220100	BODY, MEDICAL LIGHT, OVER HEAD ANODISED	2
2	LA220121	DISC, LAMPHOLDER SUPPORT	2
3	LA220109	RING,RETAINING, SUPPORT DISC	2
4	LA084	LENS O-RING	2
5	LA083	LENS, ECON 50 / MINI VIKING	2
6	LA220125	RING,LENS RETAINING,CDL 50 LAMPHEAD	2
7	LA104	RELIEF VALVE	2
8	LA220104	RING,LOCKING, PENETRATOR, ANODISED	2
9	RN6169-7	O-RING	2
10	LA220101	PLATE, BACK, ANODISED	2
11	LA220130	PENETRATOR, TWIN, C/W WIRE SPLICE & 3MTR CABLE TL	1
12	LA220102	PILLAR, BACK PLATE, ANODISED	4
13	LA220105	PIN, LOCK, LAMPHOLDER ASSY, ANODISED	2
14	LA220106	CAP, LOCK PIN LOCATION, ANODISED	2
15	LA220107	CAP, END, LOCK PIN, ANODISED	2
16	LA220327	SPRING, OVERHEAD MEDICAL LIGHT	2
17	LA158309	LAMPHOLDER, DHL2	2
18	FB204	SCREW, M/C, CSK, SLOTTED, M3X0.5X12, NYLON	4
19	LA041	YOKE	2
20	LA220111	SPACER,YOKE, INTERNAL, ANODISED	4
21	LA220115	MOUNT, YOKE, ANODISED	1
22	LA220116	SUPPORT, MAIN, ANODISED	1
23	LA220114	KNOB, SCREW,YOKE, MOUNT, CLAMP, OVER HEAD MEDICAL	2
24	LA220118	BASE, ANODISED	1
25	LA220117	CLAMP,MAIN SUPPORT, ANODISED	1
26	FB330	SCREW,CAP,SCKT, M8 X 1.25 X 30 LG	1
27	LA177	BULB, MINI-VIKING, EXT 12V/50W, OPEN	2
28	LA220112	SPACER,YOKE, EXTERNAL, ANODISED	4
29	LA220324	WASHER,LENS, 64 O/DIA X 56 I/DIA X 2.0MMTK.	2
30	LA220113	KNOB, SCREW,YOKE, CLAMP, OVER HEAD MEDICAL	4
31	FB325	SCREW,CAP,SCKT, M6 X 1 X 10 LG	1
32	RN022-7	O-RING	2
33	EM22107	PLUG, CABLE, SEACON, MIN-M, 4PIN, 12AWG	1
34	EM22108	CAP, SEALING, FOR EM22107	1
35	FW107	WASHER,PLAIN, SS316, M3	2
36	EM3615	CRIMP, RING, M3, RED, 16 TO 22 AWG	1
37	FB501	SCREW, M3 X 10MM LG, PAN HD, POZIDRIVE, SS316	1
38	MC146	CRIMP, ST. ST. 3MM,OVAL TYPE, FOR DIA. 3MM CABLE	1
39	DD030092	CABLE, STAINLESS STEEL, 2.5MM DIA	0.1M

SEE SHEET 2 △2

△2

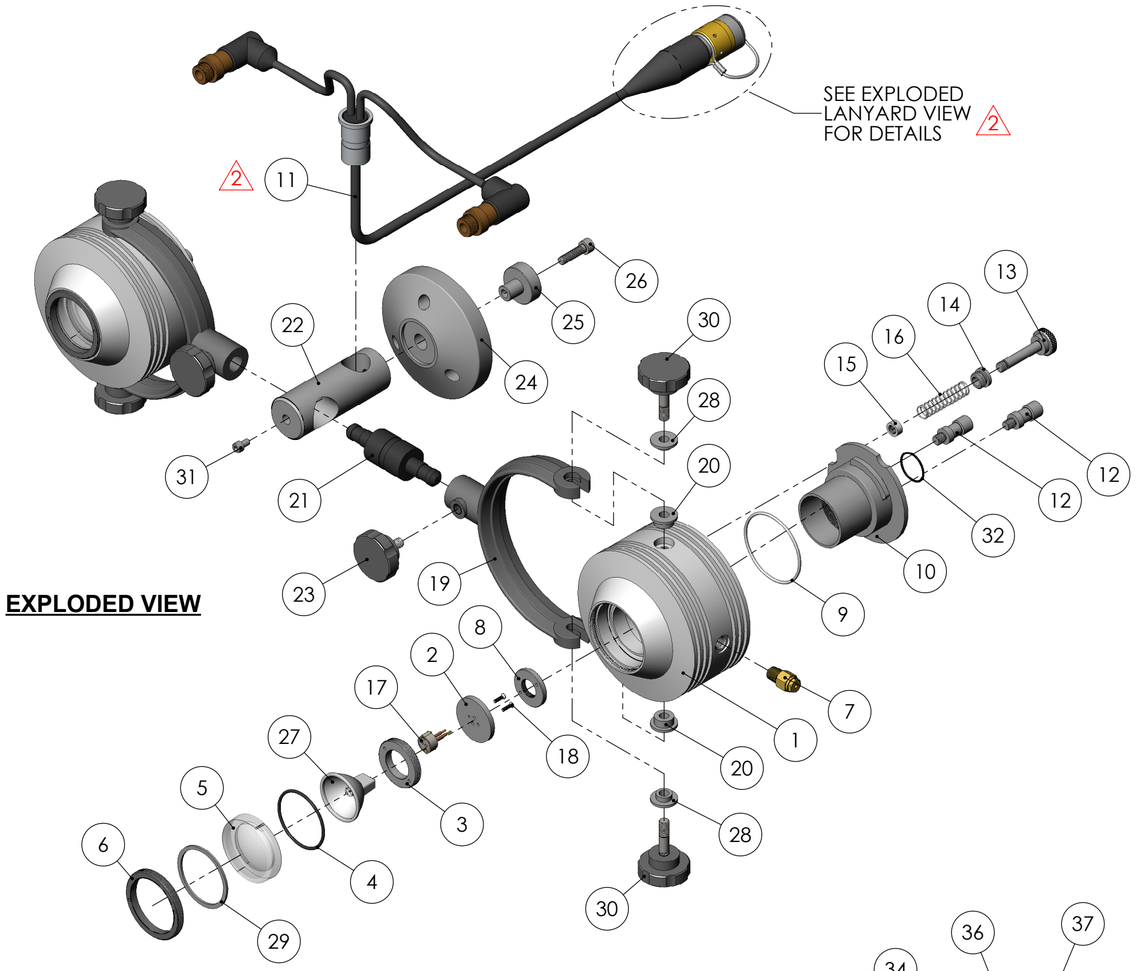

EXPLODED VIEW

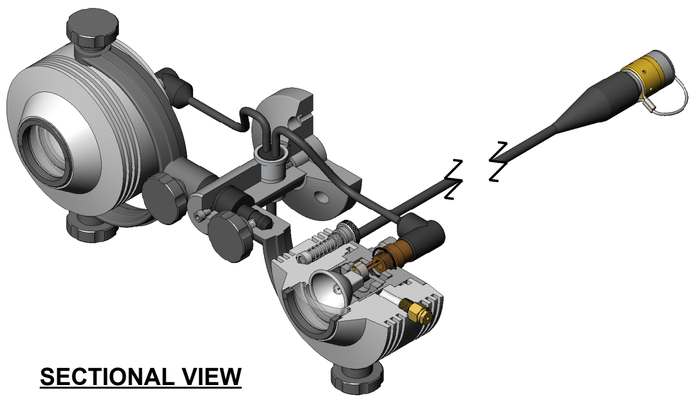

SECTIONAL VIEW

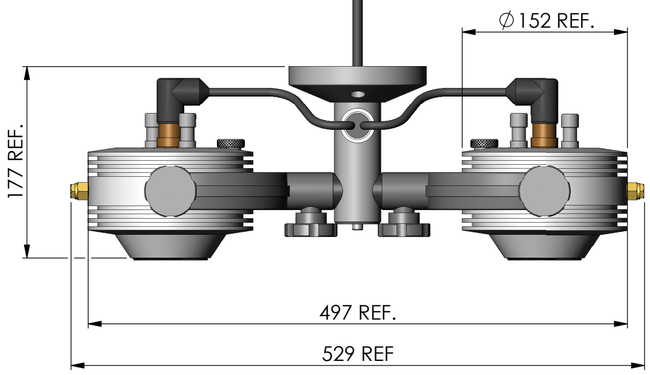

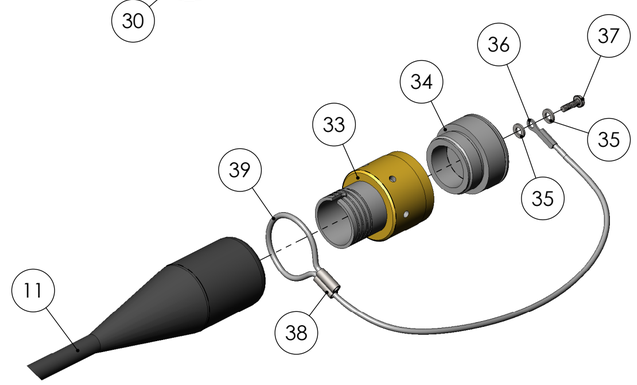

△2 **EXPLODED LANYARD VIEW**

DIVEX OWNS THE COPYRIGHT OF THIS DOCUMENT AND ANY DESIGN RIGHT HEREIN. IT IS SUPPLIED IN CONFIDENCE AND MUST NOT BE USED FOR ANY PURPOSE OTHER THAN THAT FOR WHICH IT IS SUPPLIED AND MUST NOT BE REPRODUCED WITHOUT PERMISSION IN WRITING FROM THE OWNERS.

NOTES

△2 - DENOTES CHANGES MADE AT THIS REVISION.

ALL DIMENSIONS SHOWN ARE IN MM (UOS)
ALL DIMENSIONS BEFORE PLATING (UOS)
REMOVE ALL SHARP EDGES AND BURRS

DIMENSIONAL TOLERANCES

MACHINING		FABRICATION	
NO DECIMAL PLACES	±1.0	SIZE >0 <100	±0.5
ONE DECIMAL PLACE	±0.2	SIZE >100 <500	±1.5
TWO DECIMAL PLACE	±0.05	SIZE >500	±3.0
ANGULAR TOLERANCE	±0.5°	ANGULAR TOLERANCE	±0.5°

MATERIAL: SEE PARTS LIST

FINISH: N/A

THIRD ANGLE PROJECTION

REV	DESCRIPTION	ECN No	BY	DATE	AUTH.BY
R06					
R05					
R04					
R03					
R02	BOM & VIEWS UPDATED	19121	ZD	24/03/16	MH
R01	BOM UPDATED & CONNECTION DETAILS ADDED	18956	ZD	10/02/16	MH
R00	ISSUED FOR MANUFACTURE		SJ	18/04/08	RTW

DO NOT SCALE DRAWING

TITLE: **LIGHT, MEDICAL, HYPERBARIC, TWIN, C/W SEACON**

DRAWING No.: **LA22012S1** REV: **R02**

PART No.: LA220AB PRODUCT / PROJECT No.: AQUABEAM

SIZE: A2 SCALE: NTS SHT 1 OF 2

DIVEX LIMITED
ENTERPRISE DRIVE
WESTHILL
ABERDEEN
AB32 6TQ
UNITED KINGDOM

Tel : +44(0)1224 740145
Fax : +44(0)1224 740172
email : info@divexglobal.com
www.divexglobal.com