OPERATING AND MAINTENANCE MANUAL

for the

TWO DIVER, SURFACE CONTROL, HP/LP AIR IN TRANSIT CASE, HINGED LID

(Part No: PP033AA)

(Intentionally Blank)

APPROVAL SHEET

DIVEX					
MANUAL NUMBER:	OM338				
ADVITIUM NUMBER:	PP-OM-794				
DOCUMENT TITLE:	Two Diver, Surface Control, HP/LP Air in Transit Case, Hinged Lid				
REV	**DATE**	**BY**	**CHECK**	**APP**	**COMMENTS**
0	11 October 2006	Christine Bain			Original Issue
1	28 August 2012	Debbie Allan	Simon Bryce	Mark Stevens	ECN:15335
2					
3					
4					
5					
6					
7					
ORIGINAL ISSUE DATE:	11 October 2006				
ORIGINAL DOCUMENT BY:	Christine Bain				
CHECKED BY:					
APPROVED BY:					

(Intentionally Blank)

TABLE OF CONTENTS

CHAPTER 1 - SAFETY NOTICE 1

CHAPTER 2 - TECHNICAL SPECIFICATION 3

CHAPTER 3 - GENERAL DESCRIPTION 5

CHAPTER 4 - INSTALLATION 7

CHAPTER 5 - PRE-DIVE CHECK 9

CHAPTER 6 - OPERATION 11

CHAPTER 7 - PNEUMO OPERATION 13

CHAPTER 8 - CYLINDER CHANGE OVER 15

CHAPTER 9 - AUXILIARY LOW PRESSURE INLET 17

CHAPTER 10 - LOW H.P. WARNING 19

CHAPTER 11 - MAINTENANCE 21

CHAPTER 12 - MAINTENANCE SCHEDULE - 6 MONTHLY 23

CHAPTER 13 - APPENDICES 25

(Intentionally Blank)

CHAPTER 1 SAFETY NOTICE

1.1 This unit must only be operated by suitably qualified personnel.

1.2 Read the instructions thoroughly before operating this equipment.

1.3 Only genuine manufacturer's spare parts may be used and the substitution of parts from other manufacturers will invalidate the warranty and may cause damage to the equipment. When ordering spare parts, please quote the serial number of the assembly and the part numbers required.

1.4 This panel has been designed to supply air to breathing apparatus, for diving, and the manufacturers will not be responsible for its use for any other purpose.

1.5 The user must make him/herself familiar with and observe national legal requirements concerning the safe use and maintenance of the equipment. The manufacturers ensure that the equipment complies with such regulations on delivery but it remains the responsibility of the user to comply with the legal requirements in use.

1.6 It is the responsibility of the user to establish the flow and pressure of air required for the breathing apparatus to be employed and to ensure that the supply is adequate for the use envisaged. This responsibility includes the provision of an adequate reserve air supply.

CAUTION

COMPRESSED AIR IS POTENTIALLY DANGEROUS THIS EQUIPMENT MUST BE USED CORRECTLY MISUSE COULD CAUSE SERIOUS INJURY.

(Intentionally Blank)

CHAPTER 2 TECHNICAL SPECIFICATION

Inlet Pressure	L.P. 15 BAR maximum (220 psi)	
	H.P. 350 BAR maximum (5075 psi)	
Hose Connections	LP inlet 3/8" BSP male	
	HP inlet 1/4" BSP male	
	Diver supply 3/8" BSP male	
	Pneumo 1/4" BSP male	
Overall External Dimensions	Length	730mm (29”)
	Width	610 mm (24”)
	Height	380 mm (16”)
	Weight approximately 40 kg (88lbs)	
Pipework	H.P. 8mm x 1mm stainless steel	
	L.P. 10mm x 1mm stainless steel	

(Intentionally Blank)

CHAPTER 3 GENERAL DESCRIPTION

3.1 The DIVEX two-diver, Surface Control, H.P./L.P. air panel will supply low pressure breathing air to two divers working simultaneously, to a depth of 60 metres in fresh or salt water.

3.2 The panel contains four completely separate high pressure lines, two for each diver. Non-return valves ensure that the air to one diver cannot be diverted to the other. As a back-up, one L.P. inlet line is fitted, which can supply either diver with air.

3.3 Each diver's depth can be monitored using the pneumo gauges which measure the hydrostatic pressure in an open ended hose from the panel to each diver.

3.4 The controls are packaged within a strong plastic transit case.

(Intentionally Blank)

CHAPTER 4 INSTALLATION

(Refer to Drawing PP33110S1

Using a high pressure air supply.

4.1 Ensure all on/off valves are in the OFF position.

4.2 Ensure the H.P. / L.P. regulator controls are turned fully anti-clockwise.

4.3 Connect the H.P. hose assembly to the high pressure air cylinders, ensuring that the cylinder valves remain in the OFF position.

4.4 Connect the diver's air line from the umbilical to the diver’s L.P. outlet on the panel.

4.5 Connect the diver's Pneumo hose from the umbilical to the panel pneumo connection.

4.6 Connect the diver's end of the umbilical to the appropriate breathing apparatus.

(Intentionally Blank)

CHAPTER 5 PRE-DIVE CHECK

5.1 With all lines connected and the diver dressed in all his equipment but holding the face/mask helmet, turn on the H.P. cylinder.

5.2 Turn on the H.P. inlet valve slowly (3).

5.3 Read the H.P. inlet pressure (4). Ensure that there is adequate cylinder pressure.

5.4 Use the H.P./ L.P. regulator (1) to set the correct L.P. pressure for the diver's breathing apparatus.

5.5 Slowly open the 1/4 turn diver supply outlet valve (2).

5.6 Confirm with the diver that an adequate air supply is being received at the mask/helmet.

(Intentionally Blank)

CHAPTER 6 OPERATION

6.1 The panel works automatically but the operator should continuously monitor the H.P. / L.P. air supply and the L.P. supply to the diver (s).

6.2 When the diver is descending and ascending, the control panel operator may have to adjust the H.P. / L.P. regulator (1) depending on the mask/helmet configuration.

6.3 Under conditions of very low ambient temperature or when using inadequately filtered "wet" air, icing could occur within the H.P./L.P. regulator. This could be indicated by fluctuating or falling low pressure as shown on the LP gauge (5). If any signs of icing are noticed diving should be terminated immediately.

(Intentionally Blank)

CHAPTER 7 PNEUMO OPERATION

7.1 The divers' depths can be read from the pneumo gauges (13).

7.2 Turn on the pneumo valve (6) to supply air to the pneumo hose in the umbilical and allow the air to flow for enough time to ensure it is bubbling out of the open, diver end.

7.3 When the air has bubbled out of the hose end, close off the supply valve (6) and read the hydrostatic pressure (shown as diver depth) on the pneumo gauge (13).

7.4 The depth must be checked periodically using the above method, particularly if the diver is changing depth whilst working. When his work is completed and the diver is returning to the surface, the gauge will automatically read his decreasing depth without the operator supplying more air to the pneumo hose.

(Intentionally Blank)

CHAPTER 8 CYLINDER CHANGE OVER

8.1 Slowly turn on the reserve air supply via the H.P. inlet valve (7). Confirm there is an increase in pressure on the H.P. gauge (4).

8.2 Turn off the original air supply at the H.P. inlet valve (3).

8.3 Purge the H.P. hose to the cylinder to be removed. Disconnect the cylinder and replace it with a charged H.P. air cylinder.

8.4 Slowly turn on the new air cylinder.

NOTE

Items 3 and 7 are identical and serve the same purpose. They are separately identified here only to illustrate the cylinder changing procedure.

(Intentionally Blank)

CHAPTER 9 AUXILIARY LOW PRESSURE INLET

9.1 The panel has the facility for an auxiliary low pressure inlet. This low pressure air supply must not exceed 15 Bar. To use, connect the supply hose to the L.P. inlet and direct the supply to the appropriate diver using one of the red-handled auxiliary valves (8).

NOTE

It is not advisable to use the L.P. supply for both divers at once as the deeper diver could experience a shortage of gas.

(Intentionally Blank)

CHAPTER 10 LOW H.P. WARNING

10.1 The system comprises a battery pack (9), pressure switch, warning On/Off switch (10), red warning LED (11) and a high frequency buzzer (12). During normal operation, the On/Off switch (10) must be in the on position. The pressure switch is set to operate when the H.P. supply pressure falls below 50 Bar. When this occurs, the pressure switch illuminates the warning LED (11) and the buzzer (12) sounds continuously. The panel operator will establish which H.P. supply is low by finding the illuminated LED (11). The buzzer (12) may then be cancelled by switching the warning switch (10) Off while supply cylinders are changed over. It is important that the warning switch (10) is returned to the on position after completion of the cylinder change.

(Intentionally Blank)

CHAPTER 11 MAINTENANCE

11.1 Very little maintenance is required and with the exception of the H.P. inlet valves (3 & 7) all components are factory assembled with no user serviceable parts.

11.2 Periodically inspect the panel for damage or signs of wear.

11.3 Check for air leaks by listening or by pressurising the panel, closing the valves and observing any pressure drop on the gauges. If a leak is suspected, remove the panel from its case and test for the leak with a liquid soap and water solution. Tighten any pipe connections only with the panel de-pressurised.

11.4 General Instructions for the Removal of any Component

Depressurise the system. Remove panel from case. Undo nut unions and remove the relevant piping. Remove the component. Repair or replace component. Remake all threaded joints using Locite 542 Hydraulic Seal or equivalent. Ensure that all mating surfaces and olives are clean. Do not over tighten the nut unions. Test for leaks. Return panel to case.

11.5 H.P. Panel Valve. Refer to drawing U1011.

These can be serviced in situ. Remove rubber handle by releasing the retaining nut. Unscrew the spindle nut and retract the spindle complete. Remove and inspect the valve seat. If it is undamaged, refit, If damaged, renew. Clean all items with a high quality industrial wiper. Re-assemble the valve, fitting a new Teflon spindle seal, O Ring and Copper Washer. Lubricate with light a smear of Molybdenum-Disulphide grease or any acceptable breathing air quality grease (e.g. Vaseline).

H.P. valve recommended spares (Service kit DD051201)

11.6 H.P. Non-Return Valve. Refer to drawing PP33004S1.

Test the HP non-return valves by pressurising the panel then disconnecting one H.P. hose at a time and opening the corresponding valve checking for air loss from the inlet connection. If there is any air escaping, the faulty non-return valve should be replaced.

11.7 H.P. Regulator

Servicing must be carried out by an approved engineer, trained by the manufacturer in the correct maintenance of the regulator (4). If no local approved engineer is available, the units must be returned to DIVEX for service.

The only permissible routine service is to clean the filter, located between the regulator and the H.P. inlet.

Remove the panel from the case. Locate and remove the filter. Unscrew the end pieces and remove the filter element. Clean and replace all items in reverse order.

Ensure spill valve exhaust port is kept open.

11.8 Gauges

These should be inspected on a regular basis to check for fluid loss. Also ensure that the pointer returns to zero when the pressure is released. The gauges should be calibrated in accordance with national regulations.

Damaged gauges should be replaced.

CAUTION

When replacing any components ensure that the previously noted procedures regarding cleanliness, sealants and re-assembly of nut unions are adhered to.

CHAPTER 12 MAINTENANCE SCHEDULE - 6 MONTHLY

12.1 Inspect lid and outer casing for damage. Check hinges and catches for correct operation.

12.2 Remove H.P. Panel Valve. Disassemble as described in Section 11.5 Inspect. Wipe clean with a high quality industrial wiper, lubricate with approved grease and re-assemble.

12.3 Check for free movement of 90° Diver Outlet Valves, Pneumo Valves and L.P. Isolator Valve. Section 11 for replacement.

12.4 Test H.P. Regulator by pressurising the system until the safety relief valve "blows" at 300 PSI. When reducing pressure (turning valve anti-clockwise) listen for the release of air through the Spill Valve.

12.5 Inspect all gauges for leakage of fluid and check that the needle returns to zero when the system is depressurized.

12.6 Pressurise complete system and listen for leaks.

(Intentionally Blank)

CHAPTER 13 APPENDICES

Drawing:	PP33004S1	Fit-Out Schematic
	PP33110S1	Diver Air Panel Assembly
	U1011	H.P. Control Valve spare parts

(Intentionally Blank)

ITEM	PART No.	DESCRIPTION	QTY.	
1	GP341HC	GAUGE, DEPTH, 6" DIA, PB, 230FT/70M, 0.25% ACC	2	
2	DD320003	GAUGE,63MM,CLAMP FIX,400B/6000PSI 1/4"BSP BK ENTRY	2	
3	DD320007	GAUGE, 63MM, CLAMP, 25BAR/370PSI, BACK ENTRY	3	
4	RP308	REG,3/8"NPT ,350BAR,2 OFF 1/4"NPT GA,0-30BAR OUT	2	
5	PP032901	ADAPTOR, BULKHEAD, 1/4" NPT(M) X 1/4" NPT (F)	6	
6	PP032902	ADAPTOR, BULKHEAD, 10L TUBE X 3/8" NPT(F)	3	
7	FP339	NUT, 10 L TUBE, S316	3	
8	FP340	FERRULE, 10 L TUBE, S316	3	
9	DD310312	VALVE, NEEDLE(N), P/M, 1/4" NPTF, BRASS, WP 207BAR	2	
10	VB214	VALVE,BALL, 3/8" BSP FEMALE, LG HANDLE, PANEL MNT	2	4
11	DD360135	VALVE, RISING STEM, 1/4"NPTF, SOFT SEAT, WP 350BAR	4	
12	VR208	VALVE,RELIEF, ATM DIST, 20.0 BAR, 1/4" NPT	2	
13	FP202	TEE, FEMALE PIPE, 1/4" FNPT, BRASS, WP220BAR	2	
14	DD310384/1	TUBE, 10MM X 1.0 W.T. ST.STEEL, /1M, SS 316	AS REQ	
15	DD310389/1	TUBE,8MM X 1.0 W.T. ST.STEEL, /1M, SS 316	AS REQ	
16	DD400914	TEE, EQUAL, 10L	2	
17	F28865	FILTER, INLINE, 1/4"FNPT, SS, WP344BAR, NO ELEMENT	2	
18	DD310319	VALVE, CHECK/NON-RETURN, 1/4" NPTF, SS, WP 413BAR	4	
19	DD401087	ELBOW, STUD, 8S X 1/4" NPT M	12	
20	DD401128	SEAL,BONDED, 1/4" BSP ST. STEEL, SELF CENTRING	2	4
21	DD401073	EBLOW. STUD, 10L X 3/8" BSPT M	7	
22	DD401075	ELBOW, STUD, 6L X 1/4" NPT M	8	
23	PP032905	CROSS, 3 X 3/8" BSPT MALE, 1 X 1/8" NPT FEMALE	1	
24	FJ203	CONNECTOR, MALE, 4-JIC X 1/4MNPT, BRASS, WP227BAR	2	
25	DD400220	COUPLING, STRAIGHT, 6S	2	4
26	DD400820	COUPLING, GAUGE, 1/4" BSP X 6S STANDPIPE	2	
27	FJ303	CONNECTOR, MALE, 6-JIC X 3/8"MNPT, BRASS, WP227BAR	3	
28	FP397	NIPPLE, RED, HEX, 3/8"MNPT-1/4"MNPT, SS, WP 500BAR	2	
29	DD360328-1	SWITCH,PRESSURE, LP.OIL PRESS. C/W DIN CAP	2	
30	DD400680	CROSS, EQUAL, 8S	2	
31	DD310323/1	TUBE, 6MM X 1.0 W.T., ST.STEEL 316, /1M	AS REQ	
32	DD400801	COUPLING, GAUGE, 1/4" BSP X 6L	3	
33	DD400157	TEE, SWIVEL RUN, 6L	2	
34	DD400293	STUD, 10L X 3/8" BSPT M	4	
35	DD400573	STUD, 8S X 1/4" NPT M	2	
36	DD400681	STANDPIPE, 10L X 6L	2	
37	FP215	ELBOW, FEMALE-FEMALE, 1/4" NPT, BRASS	2	
38	FJ299	FTG,CONNECTOR,MALE, 4JIC-1/4"MNPT, C/W N&F, S316	4	
39	DD310312-PN	NUT,PANEL MOUNTING	2	
40	FE034	FILTER, ELEMENT, 40-55 MICRON, SS	2	
41	FP290	PLUG, HEX HEAD, 1/4"MNPT, SS, WP551BAR	6	4
42	DD400795	WASHER, 1/4" BSPP GAUGE SEAL, MAV STYLE, STEEL	5	
43	DD400518	STUD, 6L X 1/4" NPT M	2	
44	DD400148	STUD, STANDPIPE, 8S X 1/4" BSP M	2	
45	DD401029	ELBOW, STUD, 10L X 3/8" NPT M	2	
46	DD310393	VALVE, NON-RETURN, BRASS, 3/8 BSP(F), 25 BAR MWP	3	4
47	FN102	LOCKNUT, M20 X 1.5, 5MM THICK, S316	9	
48	FW130	WASHER, FORM A, M20	9	
49	DD400149	TEE, SWIVEL RUN, 10L	2	
50	DD403011	ADAPTOR,BRASS,1/4"BSPPM CONED X1/4"NPTM HEX NIPPLE	2	
51	DD403015	ADAPTOR, BRASS, 3/8" BSP M X 3/8" NPT M	3	
52	DD405005	ADAPTOR,1/4"NPT(M) X 1/4"BSP(M),6000 PSI MAX	4	
53	DD401080	ELBOW, STUD, 6S X 1/4" NPT M	2	
54	FP342	TEE, FORGED BODY, 3/8" BSPT FEMALE	2	
55	FP325	FTG,NIPPLE, HEX, BRASS, 3/8" BSPT M	2	
56	FP344	BUSH, REDUCING, 3/8" BSPT(M) X 1/4" NPT(F)	2	
57	DD401076	ELBOW, STUD, 6L X 1/8" NPT M	1	
58	VB314	VALVE, BALL, 3/8"BSP FEMALE, RED HANDLE, PANEL MNT	2	4

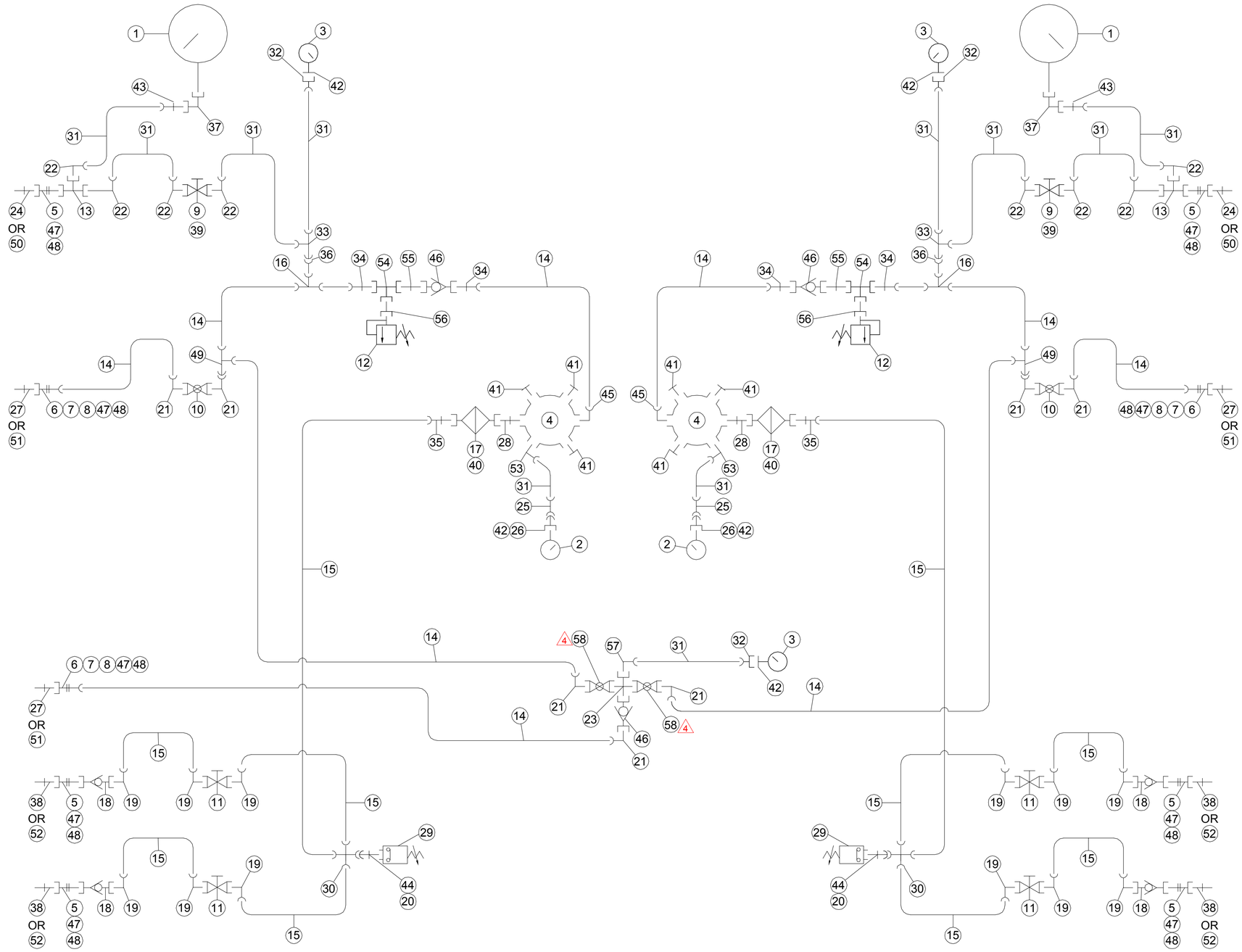

DIVEX OWNS THE COPYRIGHT OF THIS DOCUMENT AND ANY DESIGN RIGHT HEREIN. IT IS SUPPLIED IN CONFIDENCE AND MUST NOT BE USED FOR ANY PURPOSE OTHER THAN THAT FOR WHICH IT IS SUPPLIED AND MUST NOT BE REPRODUCED WITHOUT PERMISSION IN WRITING FROM THE OWNERS.

NOTES

4 DENOTES CHANGES MADE AT THIS REVISION

ALL DIMENSIONS SHOWN ARE IN MM (UOS)

ALL DIMENSIONS BEFORE PLATING (UOS)

REMOVE ALL SHARP EDGES AND BURRS

DIMENSIONAL TOLERANCES

MACHINING		FABRICATION	
NO DECIMAL PLACES	±1.0	SIZE >0 <100	±0.5
ONE DECIMAL PLACE	±0.2	SIZE >100 <500	±1.5
TWO DECIMAL PLACE	±0.05	SIZE >500	±3.0
ANGULAR TOLERANCE	±0.5°	ANGULAR TOLERANCE	±0.5°

MATERIAL: REFER TO PARTS LIST

FINISH: N/A

THIRD ANGLE PROJECTION

REV	DESCRIPTION	ECN No	BY	DATE	AUTH. BY
R06					
R05					
R04	BOM UPDATED	14288	JJM	13/09/11	MS
R03	UPDATED TO SHOW L.P. SUPPLY PRESSURE GAUGE	9342	GR	09/04/09	RTW
R02	RE-POSITION RELIEF VALVES	6750	GR	20/11/06	RTW
R01	REFER TO ECN	8865	GR	11/10/06	RTW
R00	ISSUED FOR MANUFACTURE		-	-	-

DO NOT SCALE DRAWING

TITLE: FIT-OUT SCHEMATIC, SURFACE CONTROL PANEL

DRAWING No. PP33004S1 — REV R04

PART No. N/A — PRODUCT / PROJECT No. PP

SIZE A1 — SCALE NTS — SHT 1 OF 1

DIVEX

DIVEX LIMITED
ENTERPRISE DRIVE
WESTHILL
ABERDEEN
AB32 6TQ
UNITED KINGDOM

Tel : +44(0)1224 740145
Fax : +44(0)1224 740172
email : info@divexglobal.com
www.divexglobal.com

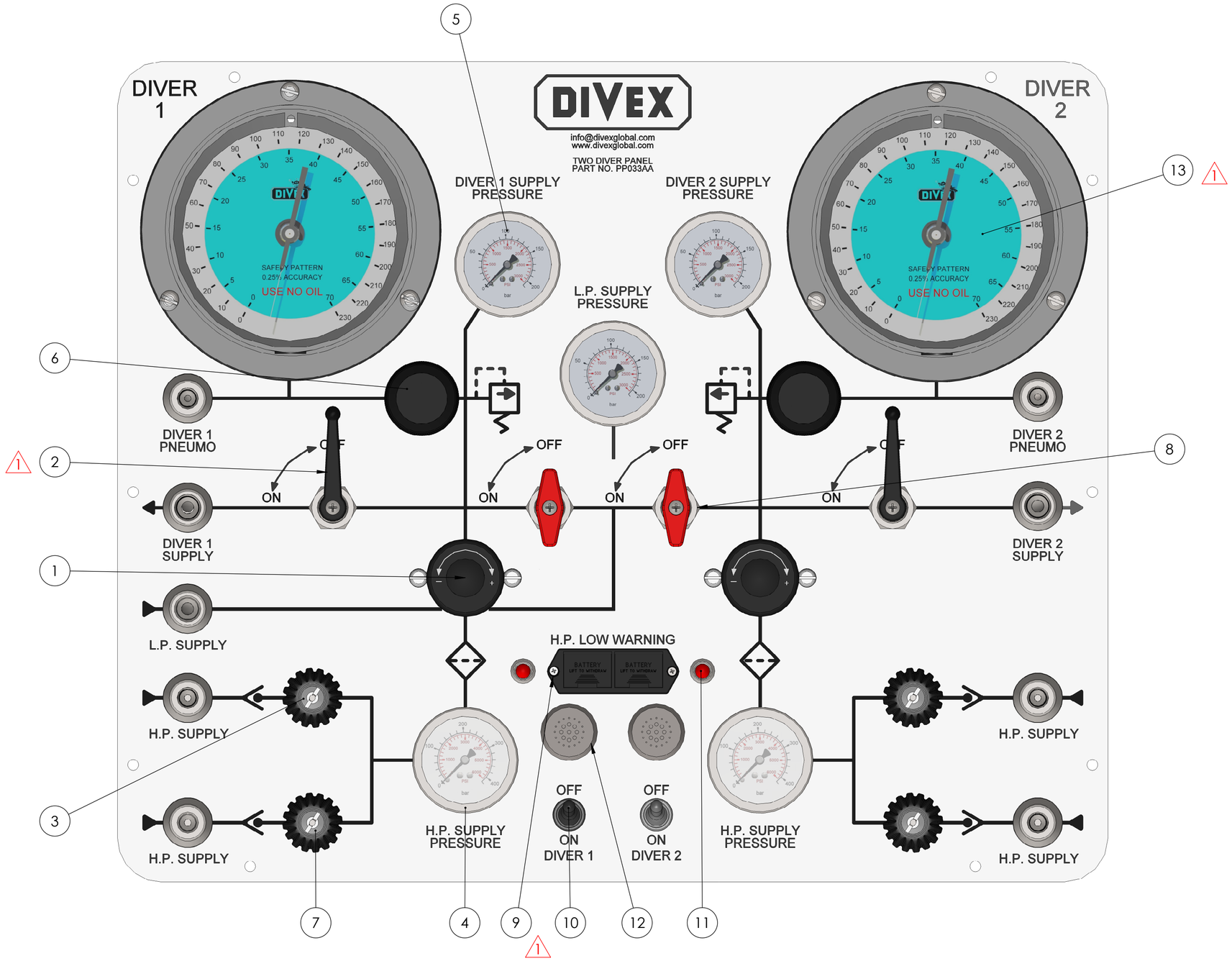

DIVEX OWNS THE COPYRIGHT OF THIS DOCUMENT AND ANY DESIGN RIGHT HEREIN. IT IS SUPPLIED IN CONFIDENCE AND MUST NOT BE USED FOR ANY PURPOSE OTHER THAN THAT FOR WHICH IT IS SUPPLIED AND MUST NOT BE REPRODUCED WITHOUT PERMISSION IN WRITING FROM THE OWNERS.

NOTES

1 DENOTES CHANGE MADE AT THIS REVISION

ALL DIMENSIONS SHOWN ARE IN MM (UOS)
ALL DIMENSIONS BEFORE PLATING (UOS)
REMOVE ALL SHARP EDGES AND BURRS

DIMENSIONAL TOLERANCES

MACHINING		FABRICATION	
NO DECIMAL PLACES	±1.0	SIZE >0 <100	±0.5
ONE DECIMAL PLACE	±0.2	SIZE >100 <500	±1.5
TWO DECIMAL PLACE	±0.05	SIZE >500	±3.0
ANGULAR TOLERANCE	±0.5°	ANGULAR TOLERANCE	±0.5°

MATERIAL: N/A

FINISH: N/A

THIRD ANGLE PROJECTION

REV	DESCRIPTION	ECN No	BY	DATE	AUTH.BY
R06					
R05					
R04					
R03					
R02					
R01	UPDATED BALLOONS	15335	SB	29/10/2012	MS
R00	ISSUED FOR MANUFACTURE		GR	21/07/2008	SW

DO NOT SCALE DRAWING

TITLE: **DIVER AIR SUPPLY, AA VARIANT, GENERAL ASSEMBLY**

DRAWING No. **PP33110S1** REV **R01**

PART No. PP033AA PRODUCT / PROJECT No. PANELS

SIZE A2 SCALE 1:2 SHT 1 OF 1

DIVEX LIMITED
ENTERPRISE DRIVE
WESTHILL
ABERDEEN
AB32 6TQ
UNITED KINGDOM
Tel : +44(0)1224 740145
Fax : +44(0)1224 740172
email : info@divexglobal.com
www.divexglobal.com

ITEM	Qty.	PART No.	DESCRIPTION
1	1	DD360331	BODY, DD ROUND VALVE
2	1	DD051305	VALVE SEAT
3	1	DD051306	SPINDLE
4	1	DD051308	'O'-Ring
5	1	DD051312	WASHER, COPPER
6	1	DD051323	NUT, STEM
7	2	DD310307	WASHER, St. St.
8	2	DD310302	NUT, HEX, PANEL MOUNT
9	1	DD051322	Handle
10	1	DD051310	SPRING
11	1	DD051311	NUT, HANDLE
12	1	DD051309	Washer, Nylon
13	1	DD051307	WASHER, TEFLON

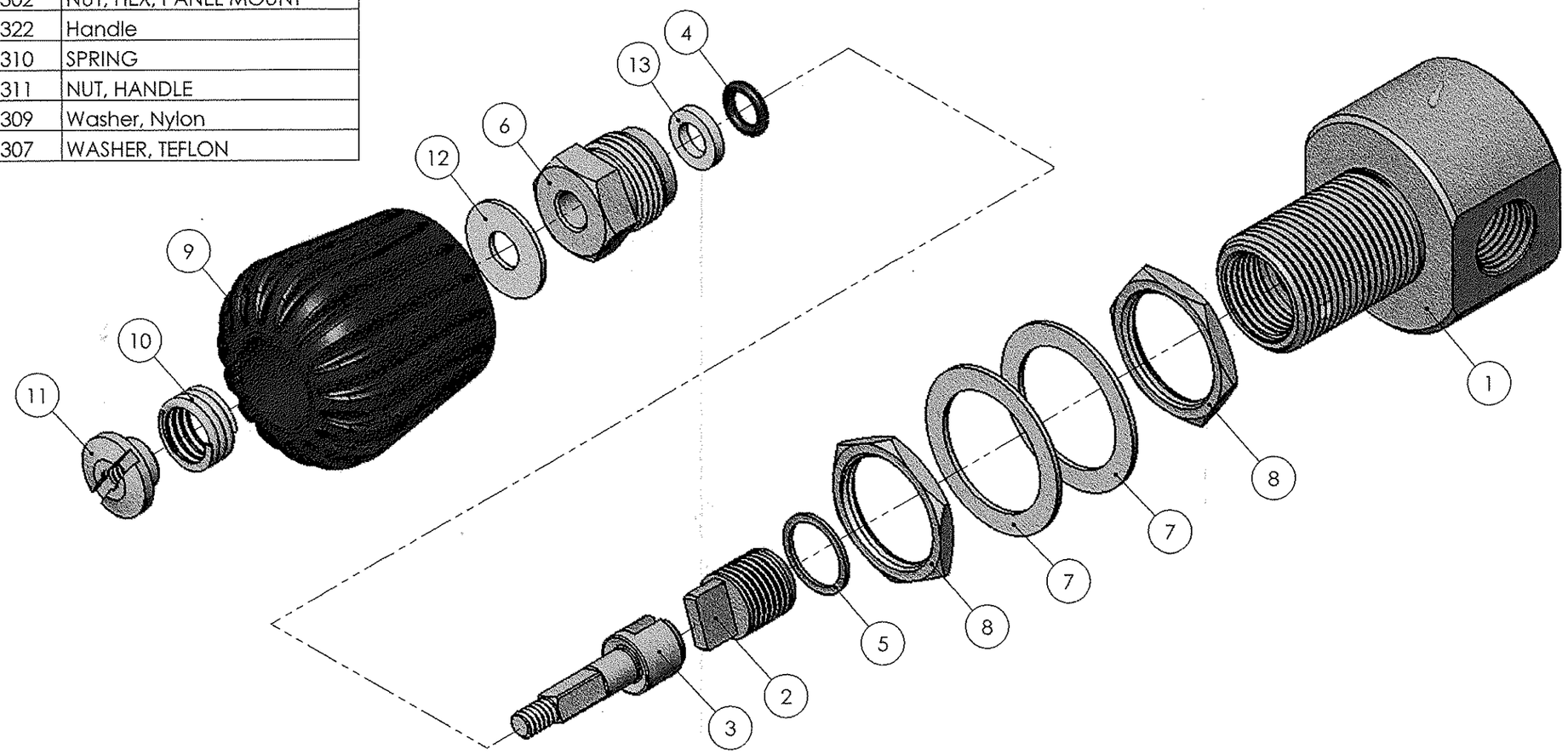

THIRD ANGLE PROJECTION

MATERIAL: SEE ABOVE

FINISH: -

DIVEX OWNS THE COPYRIGHT OF THIS DOCUMENT AND ANY DESIGN RIGHT EMBODIED HEREIN. IT IS SUPPLIED IN CONFIDENCE AND MUST NOT BE USED FOR ANY PURPOSE OTHER THAN THAT FOR WHICH IT IS SUPPLIED AND MUST NOT BE REPRODUCED WITHOUT PERMISSION IN WRITING FROM THE OWNERS

DIVEX LIMITED
ENTERPRISE DRIVE
WESTHILL
ABERDEEN. AB32 6TQ
UNITED KINGDOM.
TEL : +44 (0)1224 740145
FAX : +44 (0)1224 740172
email : info@divex.co.uk
www.divex.co.uk

A3

REV	DESCRIPTION OF REVISION	ECN	DRAWN BY	DATE	DRAFTING CHECK BY	DATE	ENGINEER CHECK BY	DATE	APPROVAL BY	DATE
6	ITEM 7 QUANTITY INCREASED	5003	PW	01.06.2004	WJW	1.6.04	WJW	1.6.04	WJW	1.6.04
5	COMPONENT PART No. CHANGE	3887	KB	29.07.2002	RTW	29.07.2002	RTW	29.07.2002	RTW	29.07.2002
4	REDRAWN ON SOLIDWORKS	3716	AJB	12.02.2002	RTW	12.02.2002	RTW	12.02.2002	RTW	12.02.2002
0	ISSUED FOR MANUFACTURE	N/A	RTW	01.12.2000	GG	07.12.2000	GG	07.12.2000	GG	07.12.2000

ALL DIMENSIONS IN MM (UOS)

ALL DIMENSIONS BEFORE PLATING (UOS)

REMOVE SHARP EDGES & BURRS

DIMENSIONAL TOLERANCES:
NO DECIMAL PLACES ±1.0
ONE DECIMAL PLACE ±0.2
TWO DECIMAL PLACES ±0.05
ANGULAR TOLERANCE ±0.5°

SCALE: NTS

PRODUCT: DD ROUND VALVE

PART No.: DD360135

CAD REF No.: 20271-6

TITLE: **PANEL CONTROL VALVE ASSEMBLY, 1/4" NPT(F) PORTS**

DRG No.: U1011 SHT: 1 REV: 6