ITEM NO.	PART NUMBER	DESCRIPTION	QTY.
1	DD310312	VALVE, NEEDLE(N), P/M, 1/4" NPTF, BRASS, WP 207BAR	2
2	DD310312-PN	NUT,PANEL MOUNTING	2
3	DD310319	VALVE, CHECK/NON-RETURN, 1/4" NPTF, SS, WP 413BAR	4
4	DD310321	VALVE,NON-RETURN, L.P. BRASS, 3/8 BSP(F)	3
5	DD310323/1	TUBE, 6MM X 1.0 W.T. ST.STEEL 316, /1M	AS REQ.
6	DD310365	LED, RED, P/M, 12VDC, IP40 - Ø14MM	2
7	DD310369	SWITCH, TOGGLE SPST, P/M, 6A@250V AC/DC	2
8	DD310384/1	TUBE, 10MM X 1.0 W.T. ST.STEEL, /1M, SS 316	AS REQ.
9	DD310389/1	TUBE, 10MM X 1.0 W.T. ST.STEEL, /1M, SS 316	AS REQ.
10	DD320003	GAUGE,63MM,CLAMP FIX,400B/6000PSI 1/4"BSP BK ENTRY	2
11	DD320007	GAUGE, 63MM, CLAMP, 25BAR/370PSI, BACK ENTRY	3
12	DD322353	TWIN BATTERY HOLDER PP3	1
13	DD360135	VALVE,DD ROUND, 2 x 1/4" NPT-F PORTS	4
14	DD360328-1	PRESSURE SWITCH, 35-120 BAR, PRESET	2
15	DD400034	OLIVE, 10MM	3
16	DD400148	STUD, STANDPIPE, 8S x 1/4" BSP M	2
17	DD400149	TEE, SWIVEL RUN, 10L	2
18	DD400157	TEE, SWIVEL RUN, 6L	2
19	DD400220	COUPLING, STRAIGHT, 6S	2
20	DD400293	STUD, 10L X 3/8" BSPT M	4
21	DD400573	STUD, 8S x 1/4" NPT M	2
22	DD400680	CROSS, EQUAL, 8S	2
23	DD400681	STANDPIPE, 10L x 6L	2
24	DD400771	NUT, 10L, M16 X 1.5	3
25	DD400795	WASHER, MAV, 1/4" BSP	1
26	DD400801	COUPLING, GAUGE, 1/4" BSP x 6L	3
27	DD400820	COUPLING, GAUGE, 1/4" BSP x 6S STANDPIPE	2
28	DD400914	TEE, EQUAL, 10L	2
29	DD401029	ELBOW, STUD, 10L x 3/8" NPT M	2
30	DD401073	ELBOW, STUD, 10L x 3/8" BSPT M	7
31	DD401075	ELBOW, STUD, 6L x 1/4" NPT M	6
32	DD401076	ELBOW, STUD, 6L x 1/8" NPT M	1
33	DD401080	ELBOW, STUD, 6S x 1/4" NPT M	2
34	DD401087	ELBOW, STUD, 8S x 1/4" NPT M	12
35	DD401128	SEAL,BONDED, 1/4" BSP ST. STEEL, SELF CENTRING	2
36	DD500012	COVER, TOGGLE SWITCH, FULL	2
37	DD500023	BUZZER, CONTINUOUS TONE, IP67	2
38	F28865	FILTER, INLINE, 1/4"FNPT, WITH 40-55 MICRON ELEM	2
39	FB502	SCREW, M3 X 12MM LG, CSK HD, POZIDRIVE, SS316	2
40	FJ250	ELBOW, MALE, 4-JIC X 1/4"NPT(M), BRASS, MWP227BAR	2
41	FN089	NUT, NYLOC, M3, 316 ST STEEL	2
42	FN102	LOCKNUT, M20 X 1.5, 5MM THICK, S316	9
43	FP202	TEE, FEMALE PIPE, 1/4" FNPT, BRASS, WP220BAR	2
44	FP290	PLUG, HEX HEAD, 1/4"MNPT, SS, WP551BAR	6
45	FP325	FTG,NIPPLE, HEX, BRASS, 3/8" BSPT M	2
46	FP342	TEE, FORGED BODY, 3/8" BSPT FEMALE	2
47	FP344	BUSH, REDUCING, 3/8" BSPT(M) X 1/4" NPT(F)	2
48	FP397	NIPPLE, RED, HEX, 3/8"MNPT-1/4"MNPT, SS, WP 500BAR	2
49	FW107	WASHER,PLAIN, SS316, M3	2
50	FW130	WASHER, FORM A, M20, 316 SS	9
51	KI10226	GROMMET ,RUBBER 7/8"HOLE	2
52	PP032301	FASCIA, DIVER AIR, AA VARIANT	1
53	PP032901	ADAPTOR, BULKHEAD, 1/4" NPT(M) X 1/4" NPT (F)	6
54	PP032902	ADAPTOR, BULKHEAD, 10L TUBE X 3/8" NPT(F)	3
55	PP032905	CROSS,3x3/8" BSPT MALE & 1x1/8" NPT FEMALE,BRASS	1
56	RP44102	REGULATOR, 0-35BAR, 3/8" NPT, MRIP - 414BAR, 316SS	2
57	VB214	VALVE,BALL, 3/8" BSP FEMALE, LG HANDLE, PANEL MNT	2
58	VB314	VALVE, BALL, 3/8"BSP FEMALE, RED HANDLE, PANEL MNT	2
59	VR208	VALVE,RELIEF, ATM DIST, 20.0 BAR, 1/4" NPT	2
60	RK45564	NUT, MOUNTING, PANEL (NOT SHOWN)	2

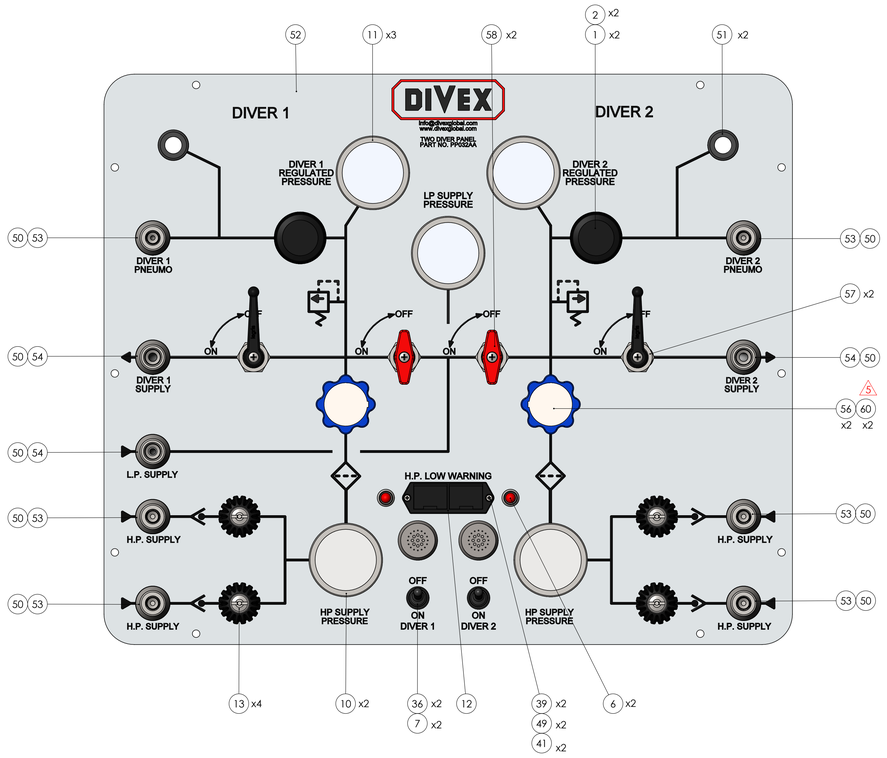

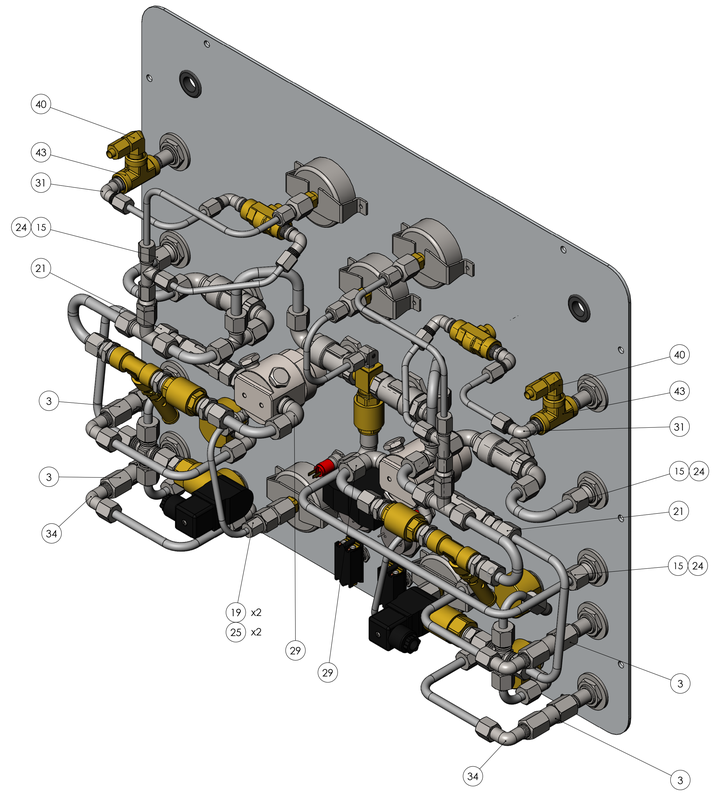

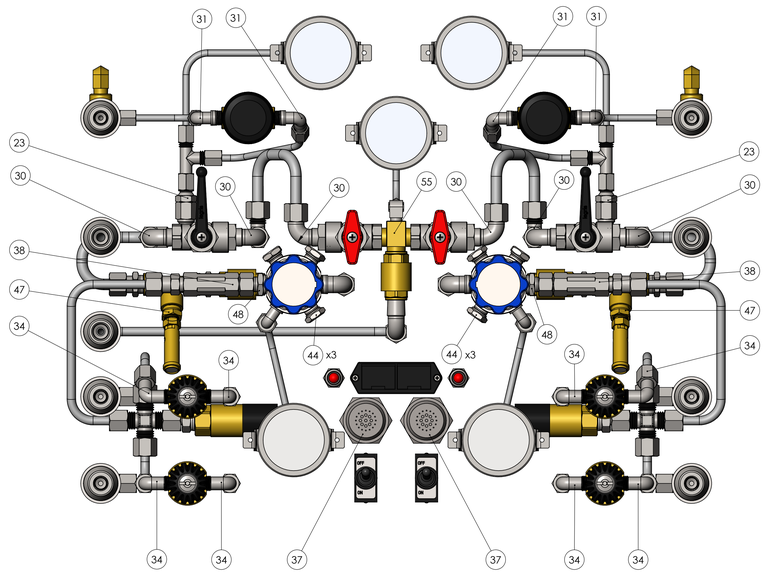

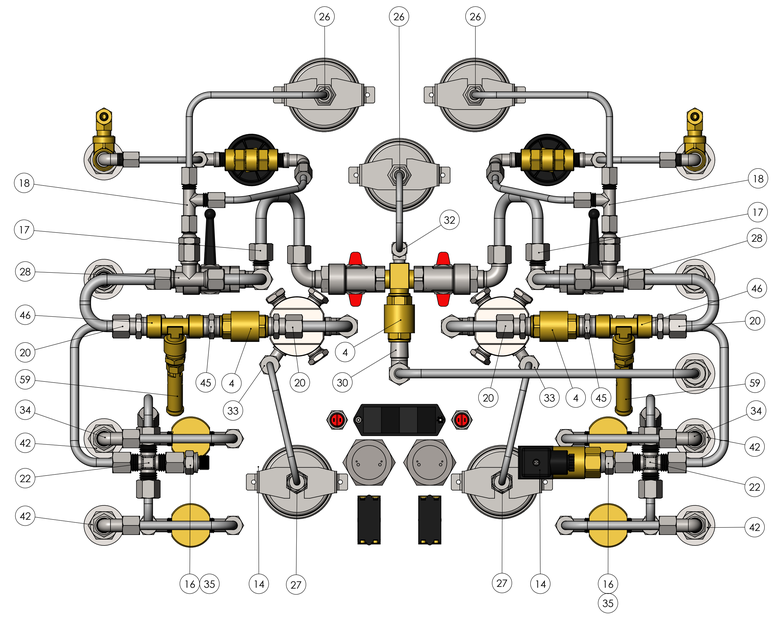

DIVEX OWNS THE COPYRIGHT OF THIS DOCUMENT AND ANY DESIGN RIGHT HEREIN. IT IS SUPPLIED IN CONFIDENCE AND MUST NOT BE USED FOR ANY PURPOSE OTHER THAN THAT FOR WHICH IT IS SUPPLIED AND MUST NOT BE REPRODUCED WITHOUT PERMISSION IN WRITING FROM THE OWNERS.

NOTES

5 DENOTES CHANGES MADE AT THIS REVISION

ALL DIMENSIONS SHOWN ARE IN MM (UOS)
ALL DIMENSIONS BEFORE PLATING (UOS)
REMOVE ALL SHARP EDGES AND BURRS

DIMENSIONAL TOLERANCES

MACHINING		FABRICATION	
NO DECIMAL PLACES	±1.0	SIZE >0 <100	±0.5
ONE DECIMAL PLACE	±0.2	SIZE >100 <500	±1.5
TWO DECIMAL PLACE	±0.05	SIZE >500	±3.0
ANGULAR TOLERANCE	±0.5°	ANGULAR TOLERANCE	±0.5°

MATERIAL: SEE PARTS LIST

FINISH: N/A

THIRD ANGLE PROJECTION

REV	DESCRIPTION	ECN No	BY	DATE	AUTH.BY
R06					
R05	RK45564 ADDED	17896	MJ	21/07/15	SC
R04	RP308 REPLACED WITH RP44102 & MODEL UPDATED	15519	MJ	03/02/15	SC
R03	RUBBER BOOT COVER ADDED, TOGGLE SWITCH LEGEND REMOVED. LP SUPPLY PRESSURE GAUGE ADDED	10544	GR	10/07/08	RTW
R02	REFER TO ECN	6608	GC	09/08/07	RTW
R01	UPDATED	4533	PW	16/10/03	RTW
R00	ISSUED FOR MANUFACTURE		KB	12/08/02	RTW

DO NOT SCALE DRAWING

TITLE: **KIT, PIPEWORK, PP032 DIVER AIR PANEL, ALL VARIANTS**

DRAWING No.: **PP32101S1** REV: **R05**

PART No.: PP032101 PRODUCT / PROJECT No.: PP

SIZE: A0 SCALE: 1:2 SHT 1 OF 1

DIVEX
DIVEX LIMITED
ENTERPRISE DRIVE
WESTHILL
ABERDEEN
AB32 6TQ
UNITED KINGDOM
Tel : +44(0)1224 740145
Fax : +44(0)1224 740172
email : info@divexglobal.com
www.divexglobal.com