ITEM NO.	PART NUMBER	DESCRIPTION	QTY
1	CO437300	ENCLOSURE, ST ST 316, 140 x 140 x 85, PRE DRILLED	1
2	EM906	END STOP	1
3	FN078	NUT, NYLOC, M4, 316 ST STEEL	4
4	FB250	SCREW,M/C,PAN HD, M4 X 0.7 X 16	4
5	EM3237	SPEAKER, FULL RANGE, 4 OHM, 25W, WEATHER RESISTANT	1
6	EM22462	STANDARD DIN 2.5MM TERMINALS	2
7	EM3691	END COVER, TERMINAL, 2.5MM	1
8	EM3123	TERMINAL, EARTH, DIN,WPE 2.5	1

3

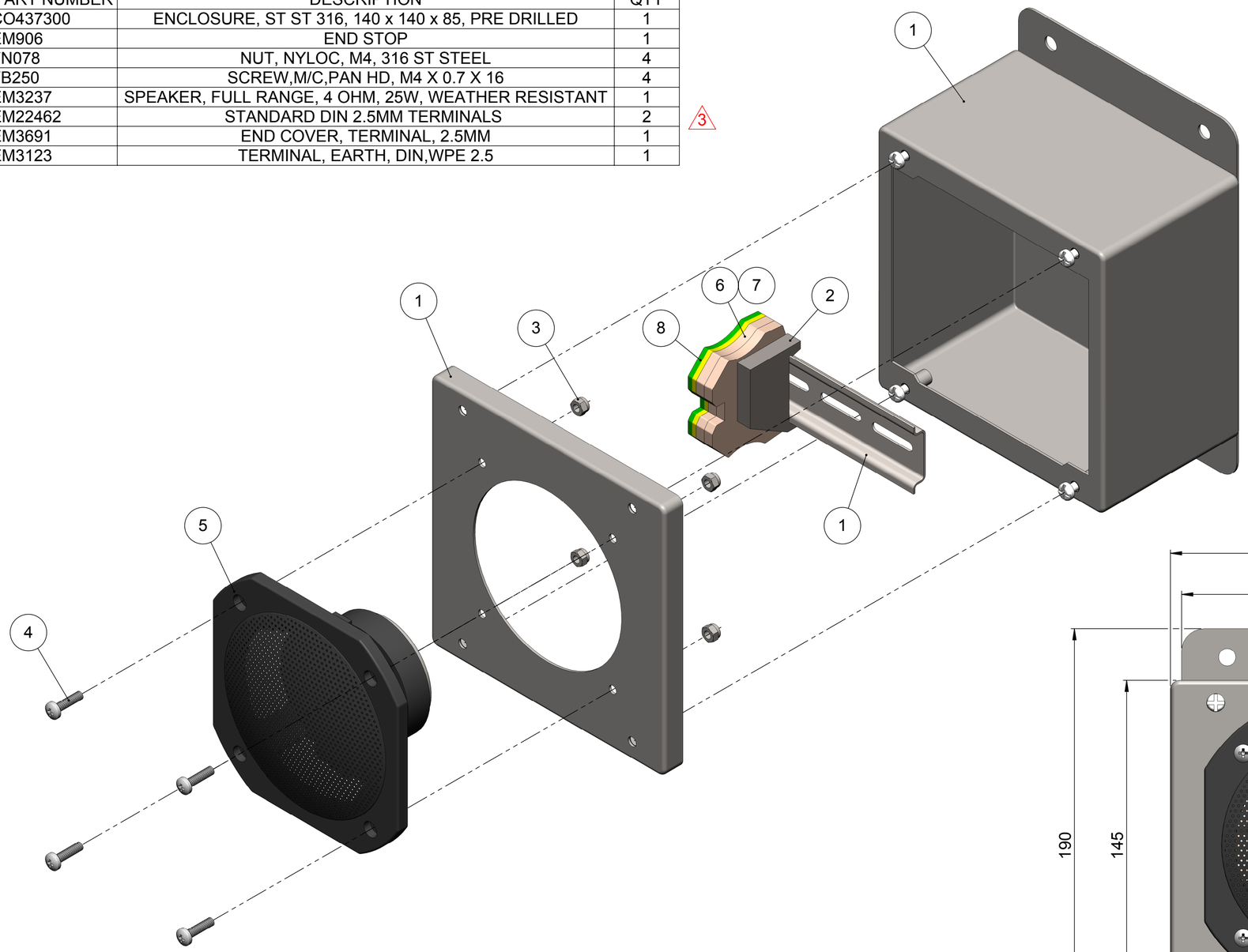

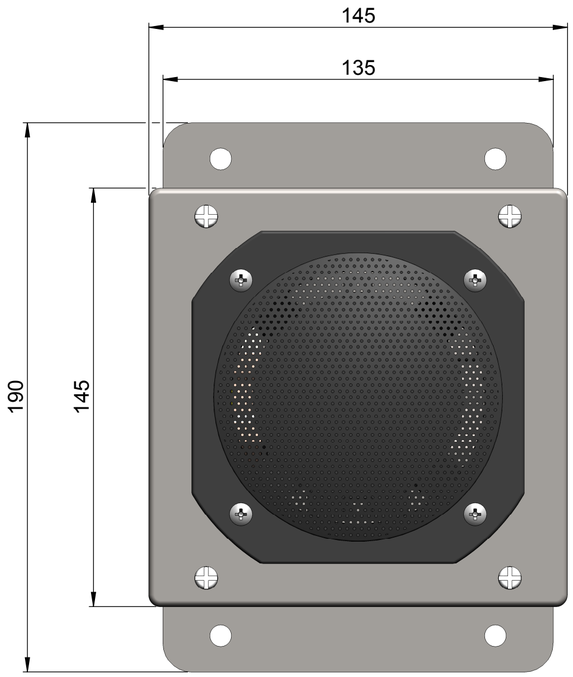

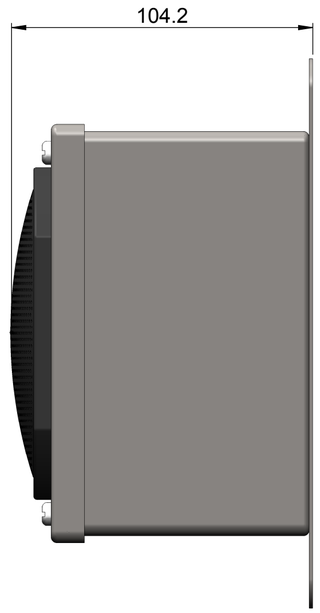

DIVEX OWNS THE COPYRIGHT OF THIS DOCUMENT AND ANY DESIGN RIGHT HEREIN. IT IS SUPPLIED IN CONFIDENCE AND MUST NOT BE USED FOR ANY PURPOSE OTHER THAN THAT FOR WHICH IT IS SUPPLIED AND MUST NOT BE REPRODUCED WITHOUT PERMISSION IN WRITING FROM THE OWNERS.

NOTES

3 - DENOTES CHANGES MADE AT THIS REVISION.

ALL DIMENSIONS SHOWN ARE IN MM (UOS)
ALL DIMENSIONS BEFORE PLATING (UOS)
REMOVE ALL SHARP EDGES AND BURRS

DIMENSIONAL TOLERANCES

MACHINING		FABRICATION	
NO DECIMAL PLACES	±1.0	SIZE >0 <100	±0.5
ONE DECIMAL PLACE	±0.2	SIZE >100 <500	±1.5
TWO DECIMAL PLACE	±0.05	SIZE >500	±3.0
ANGULAR TOLERANCE	±0.5°	ANGULAR TOLERANCE	±0.5°

MATERIAL: SEE PARTS LIST

FINISH: N/A

THIRD ANGLE PROJECTION

REV	DESCRIPTION	ECN No	BY	DATE	AUTH.BY
R06					
R05					
R04					
R03	EM3689 REPLACED WITH EM22462	17640	ZD	18/03/2015	SC
R02	BOM & ITEM 8 POSITION UPDATED	16570	ZD	19/05/2014	SW
R01	MOUNTING BRACKET ADDED	13752	ZD	27/08/2010	IB
R00	ISSUED FOR MANUFACTURE		DR	30/06/2010	CST

DO NOT SCALE DRAWING

TITLE: **ENCLOSURE, SPEAKER, COMMS**

DRAWING No.: **CO437S1** REV: **R03**

PART No.: CO437 PRODUCT / PROJECT No.: COMMS

SIZE: A2 SCALE: NTS SHT 1 OF 1

DIVEX
DIVEX LIMITED
ENTERPRISE DRIVE
WESTHILL
ABERDEEN
AB32 6TQ
UNITED KINGDOM

Tel : +44(0)1224 740145
Fax : +44(0)1224 740172
email : info@divexglobal.com
www.divexglobal.com