INSTALLATION, OPERATING AND MAINTENANCE MANUAL

TYPE PWS-RM2 POTABLE WATER SYSTEM RING MAIN

Divex SA Document No. 05287-805
Divex UK Document No. PWS100-OM-280

Divex SA Part No. KI04900
Divex UK Part No. PWS100AA

ENGINEERING DOCUMENT FRONT SHEET

DOCUMENT NUMBER	:	05287-805
DOCUMENT TITLE	:	Installation, Operating & Maintenance Manual Type PWS-RM2 Potable Water System – Ring Main

REV.	DATE	BY	CHK	APP	COMMENTS
00	27/11/2008	DP-R	NM	NM	First Issue
01	11/5/2009	DP-R	CG	DH	Statutory info & warning notices update Formatting update
02					
03					
04					
05					
06					
07					
08					
09					

ORIGINAL ISSUE DATE	:	**27/11/2008**
ORIGINAL DOCUMENT BY	:	**David Park-Ross**
CHECKED BY	:	**Nicholas Maske**
APPROVED BY	:	**Nicholas Maske**

DATA SHEET

INSTRUCTION & MAINTENANCE MANUAL No.: 05287-805

FILENAME AND PATH: \\Milkyway\Products\Kinergetics\PWS Ring Main PWS-RM2\Manual\05287-805

* **EQUIPMENT TYPE :** PWS-RM2 Potable Water System – Ring Main

* **EQUIPMENT SERIAL No.:** .....

* **CUSTOMER:** .....

* **VESSEL/LOCATION: (if known)** .....

DATE OF ISSUE: .....

NOTE:

Please quote the information identified above with an asterisk when contacting Divex for technical support or spare parts ordering.

DISCLAIMER

Whilst every effort has been made to ensure the accuracy of the information provided in this document, Divex makes no guarantees therefore.

Misuse of the equipment described in this manual could result in injury. It is the responsibility of the user to ensure that the equipment is used and maintained correctly and in accordance with the instructions provided in this manual in order to ensure safety of life and to prevent injury.

CONFIDENTIAL INFORMATION

This document is confidential and is the property of Divex Ltd. It may not be distributed to persons or organisations other than the intended recipient without the prior written consent of the owner.

WARRANTY

Divex Ltd warrants that its Type PWS-RM2 Potable Water System conforms to the current product specification at the date of delivery and that the product will be free of patent defects in materials or workmanship for a period of twelve months from the date of delivery or for the first 3,000 operating hours, whichever occurs first.

Any component or sub-system which is established by Divex to be patently defective will, at Divex's option, be repaired or replaced on condition that such defective equipment is returned to Divex's manufacturing facility in Cape Town, South Africa, freight pre-paid. On completion of any repair or replacement, the equipment will be returned to the customer FOB Cape Town, South Africa. By agreement and upon prepayment by the customer of any transportation, on-site accommodation and subsistence expenses, Divex may dispatch personnel to perform on-site repairs.

The product specification and warranty terms are subject to alteration without prior notice and do not form part of any contract made between Divex and its customer.

This equipment should only be operated by suitably qualified persons conversant with the operation and maintenance of environmental conditioning equipment used in saturation dive systems. Before operating the equipment, the user must be fully acquainted with the instructions contained in this manual, as well as the individual component manufacturer's operating and maintenance information provided in the Appendixes.

Only genuine manufacturer's spare parts may be used in this Divex product. Use of other manufacturer's parts may cause degradation of performance or failure and will invalidate the warranty.

The following information is required by Divex when ordering spare parts:

- Customer's / owner's name
- Equipment serial number
- Spare part type / description
- Part number

CONTENTS

ENGINEERING DOCUMENT FRONT SHEET 2
DATA SHEET 3
DISCLAIMER 4
CONFIDENTIAL INFORMATION 4
WARRANTY 4
1.0 SYSTEM OVERVIEW 7
1.1 Applications 7
1.2 General Description 7
1.3 Principle of Operation 9
1.4 Medium or High Demand Configuration Options 10
2.0 MAJOR COMPONENTS IDENTIFICATION 11
2.1 Introduction 11
2.2 Pipe Schematic 12
2.3 Left Side Layout 13
2.4 Right Side Layout 14
2.5 Rear Layout 15
2.6 Control Panel 16
3.0 INSTALLATION AND COMMISSIONING 17
4.0 START-UP & OPERATION 22
4.1 Start-Up Sequence 22
4.2 During Operation 23
5.0 AFTER USE 24
6.0 MAINTENANCE 25
7.0 SERVICING 26
8.0 FAULT FINDING 28
9.0 TECHNICAL SPECIFICATION 30
10.0 RECOMMENDED SPARE PARTS LISTS 32
10.1 Recommended Electrical Spare Parts 32
10.2 Recommended Mechanical Spare Parts 34
COMPONENT MANUFACTURER'S INFORMATION MATRIX 35

APPENDIX 1 Berson UV Techniek – UV Sterilizer 37

APPENDIX 2 CAT Pumps – Booster Pump & Thermal Expansion Accumulator 39

APPENDIX 3 Divex – Zinc Anode 41

APPENDIX 4 Flotect® - Level Switch 43

APPENDIX 5 Ham-Let – Non-Return Valve 45

APPENDIX 6 HB Systems – Electrical Control Panel 47

APPENDIX 7 Honeywell – Pressure Regulating Valve 49

APPENDIX 8 Hydac Technology – Hydraulic Accumulator 51

APPENDIX 9 Leser – Safety Valve 53

APPENDIX 10 Pall Corporation – Water Filter 55

APPENDIX 11 Shinko – Temperature & Pressure Controllers 57

APPENDIX 12 Siemens – Motor Variable Speed Drive 59

APPENDIX 13 Watlow – Immersion Heaters 61

APPENDIX 14 Wika – Pressure Gauge, Pressure Sensor & Resistance Thermometer 63

APPENDIX 15 Worcester Controls – Quarter-Turn Valves 65

ILLUSTRATIONS

Figure 1: PWS-RM2 Potable Water System - Ring Main **7**

Figure 2: Pump Start/Stop Pressure Set-Points for Master/Slave Configuration **10**

Figure 3: Left Side View **13**

Figure 4: Right Side View **14**

Figure 5: Rear View **15**

Figure 6: Control Panel Layout **16**

1.0 SYSTEM OVERVIEW

1.1 Applications

The PWS-RM2 Potable Water Supply Skid is designed to provide an automatically controlled ring main supply of hot and cold potable water for domestic use in large saturation diving systems.

Figure 1: PWS-RM2 Potable Water System - Ring Main

1.2 General Description

The system is installed on a robust, welded channel section Grade 316 stainless steel base with a Grade 316 stainless steel angle section upper framework providing mounting points and support for system components, pipe-work, the electrical switchboard and wiring runs.

The PWS-RM2 comprises the following major components:

- Incoming water supply pressure reducing valve, 12 bar inlet, 6 bar regulated outlet
- Incoming water supply filtration and UV sterilization system

- 60 litre/minute positive displacement triplex booster pump with a variable speed drive (VSD) to maintain a constant ring main pressure and a 12 litre accumulator to minimise hydraulic pulsing and stop-start pump cycling
- Piping system configured such that the booster pump provides system pressure to both the hot and cold potable water ring main supplies
- Calorifier tank (or heating vessel) of 150 litres volume & 43 bar MWP, equipped with three 6 kW immersion heating elements, a process temperature digital controller, a safety temperature digital controller and a 0.75 litre thermal expansion accumulator.
- Thermo-syphon return piping system which maintains ring main hot water supply temperature to provide consumers in the chambers with near instant hot water.
- Electrical control panel.
- Stainless steel skid frame.

1.2.1 Booster Pump

The booster pump comprises the following components:

- A water supply low pressure switch, which shuts the pump down to prevent it cavitating in the event of a pressure drop due to a clogged water supply inlet filter or failure of the ship's cold potable water supply to the skid. The factory-set cut-out pressure is 2 bar.
- Filtration and UV Sterilization system for the incoming ship's water supply.
- CAT triplex pump, belt-driven by a 7.5 kW 440V 60Hz 3 phase electric motor.
- Siemens variable speed motor drive.
- 12 Litre hydraulic accumulator.
- Pressure sensor/transmitter and pressure controller with digital pressure readout at the control panel, which provides a feedback signal to the VSD for pump control.
- 1″ Nominal supply and discharge Grade 316 stainless steel pipe-work.

1.2.2 Calorifier

The calorifier comprises the following components:

- Stainless steel calorifier tank (or pressure vessel) of 150 litre water capacity, with a 43 bar maximum working pressure and a 45 bar design pressure.
- Three 6 kW immersion heater elements with bolt-on flanges.
- Process temperature sensor and controller, factory set at 55°C, to control the working temperature of the water in the calorifier and display the temperature at the control panel.
- Safety temperature sensor and controller, factory set at 75°C, to control the water temperature in the unlikely event of failure of the process thermostat. The controller is mounted inside the control panel.
- Low water level switch to isolate power to the heating elements in the event of low water level in the tank.
- Water thermal expansion accumulator of 0.75 litre volume.
- Water inlet non-return valve.
- Air vent valve and pipe-work.
- Water drain valve and pipe-work.
- Safety valve capable of relieving the full 60 litre/minute flow, set to open at 45 bar.
- Zinc anodes to prevent galvanic corrosion of the heating elements and/or the pressure vessel.

1.3 Principle of Operation

1. Cold potable water from the ship's supply (at a supply pressure of between 4 and 12 bar) entering the skid is regulated at the inlet manifold to 6 bar. It is then filtered to remove particulate contaminants to 5 μm, followed by a UV sterilization process, where after it is fed to the pump.
2. The triplex pump boosts the pressure to a maximum pressure of 43 bar at a variable delivery rate of up to 60 litres/minute. The actual pumped flow depends on demand – the greater the demand, the faster the VSD makes the pump work. A pressure sensor/transmitter (in the pump outlet manifold) and digital pressure controller provides a feedback signal to the VSD which starts the pump at 35 bar and cuts it out at 43 bar.

IMPORTANT
When two units are used in master/slave configuration for high demand applications, the master unit's pump control pressures are left at the factory settings to start @ 35 bar and stop @ 43 bar, while the slave unit's pump control pressures are re-set to start @ 30 bar and stop @ 38 bar.

3. Supply pressure to individual chamber consumers is reduced to 3 bar over chamber bottom pressure by local pressure-tracking regulators installed at each chamber lock.

IMPORTANT
The regulators are not included in the standard PWS-RM2 scope of supply and are available from Divex on request.

4. A 12 litre hydraulic accumulator installed downstream of the pump protects the system from hydraulic pulsing and stop-start pump cycling and consequent overheating.
5. From the pump the water is split into hot and cold streams.
6. The stream for the hot water system enters the calorifier tank through a non-return valve and is heated by the immersion heater elements to 55°C. Temperature is controlled by a process temperature sensor and programmable digital temperature controller and display at the control panel. From the calorifier the hot potable water is piped into the saturation system's hot water ring main for use by the various chamber consumers.
7. A safety temperature sensor and programmable digital temperature controller set at 75°C provides a backup in the unlikely event of failure of the process sensor and controller. The safety temperature controller is mounted inside the control panel where it is not readily accessible to prevent inadvertent adjustment of the safety temperature settings.
8. The ring main hot water piping system has a return piping system configured to create a thermo-syphon effect to re-heat hot water that has cooled in the ring main. This arrangement is designed to automatically maintain the hot water supply temperature close to the set level at all times and provide all chamber consumers with near instant hot water at all times.

9. The cold water supply is pumped directly into the cold water ring main for distribution to chamber consumers.
10. As the downstream pressure in the hot or cold or both supplies drops due to usage by the occupants of the dive system, the hydraulic accumulator compensates for the initial pressure drop and, when the pressure drops to 35 bar, the pressure controller sends a signal to the VSD to start the booster pump to make up pressure. When the pressure reaches 43 bar, the pressure controller shuts the pump down again. The VSD determines the rate of make-up by controlling pump speed.

1.4 Medium or High Demand Configuration Options

The PWS- RM2 may be configured for medium or high potable water demand applications.

1.4.1 Medium Demand Applications - Up To 60 Litres/Minute

For applications where peak demand does not exceed 60 litres/minute, it is recommended that the PWS- RM2 Potable Water Supply is configured as a single unit to deliver a variable supply of 0 to 60 litres/minute of hot and cold potable water. Standard factory settings for pump start and stop pressures are used.

1.4.2 High Demand Applications - Up To 120 Litres/Minute

For large dive systems where peak demand may be as high as 120 litres/minute, it is recommended that two PWS- RM2 Potable Water Supply skids are configured in a master/slave arrangement. In this configuration, the slave unit supplements the output of the master unit as required when potable water demand exceeds 60 litres/minute.

The slave unit's pump start/stop pressure set-points must be re-set to 5 bar below the start/stop set-points of the master unit. The factory start/stop set-points for single unit configuration are 35 bar and 48 bar respectively. The Master Unit/Slave Unit differential set points are illustrated in Figure 2 below.

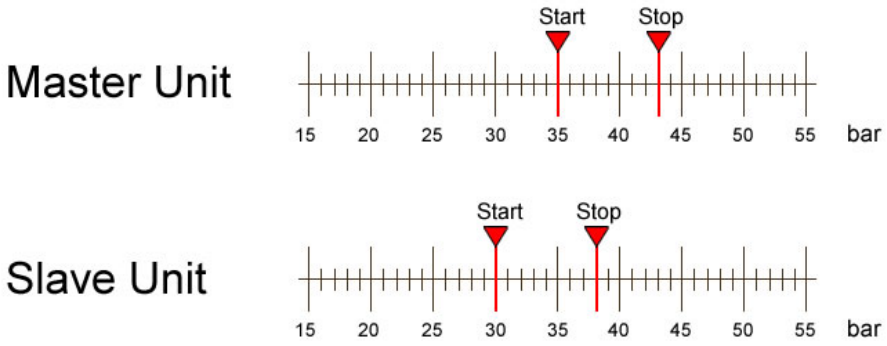

Figure 2: Pump Start/Stop Pressure Set-Points for Master/Slave Configuration

Consumer demand will cause the ring main pressure to decrease. The accumulator will compensate for the initial pressure drop. When the ring main pressure decreases to 35 bar, the master unit's pump starts pumping. If ring main pressure continues to decrease, the slave unit's pump is automatically started when the pressure drops to 30 bar. The slave unit then supplements the delivery of the master unit until such time as ring main pressure increases to 38 bar (within the master unit's set-points), whereupon the slave unit's pump shuts down and the master unit's pump continues delivery as required.

2.0 MAJOR COMPONENTS IDENTIFICATION

2.1 Introduction

This section helps the user to visually identify all sub-systems, components and connections of the PWS-RM2. A piping schematic diagram, followed by left, rear and right side views, with position identifier balloons, are provided of the system overleaf. A close up view of the control panel is also provided to help the user identify the various controls described in the text.

2.2 Pipe Schematic

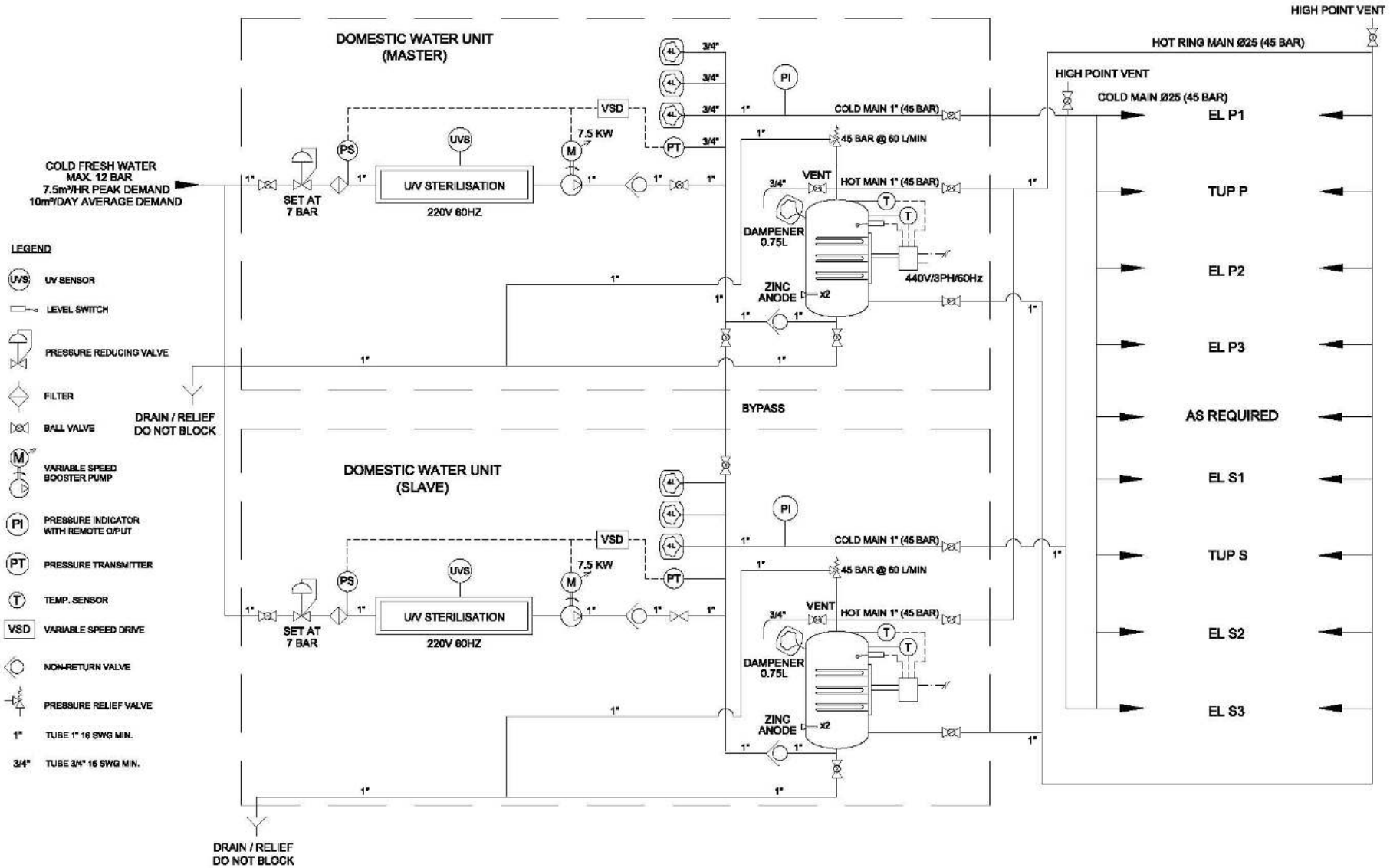

2.3 Left Side Layout

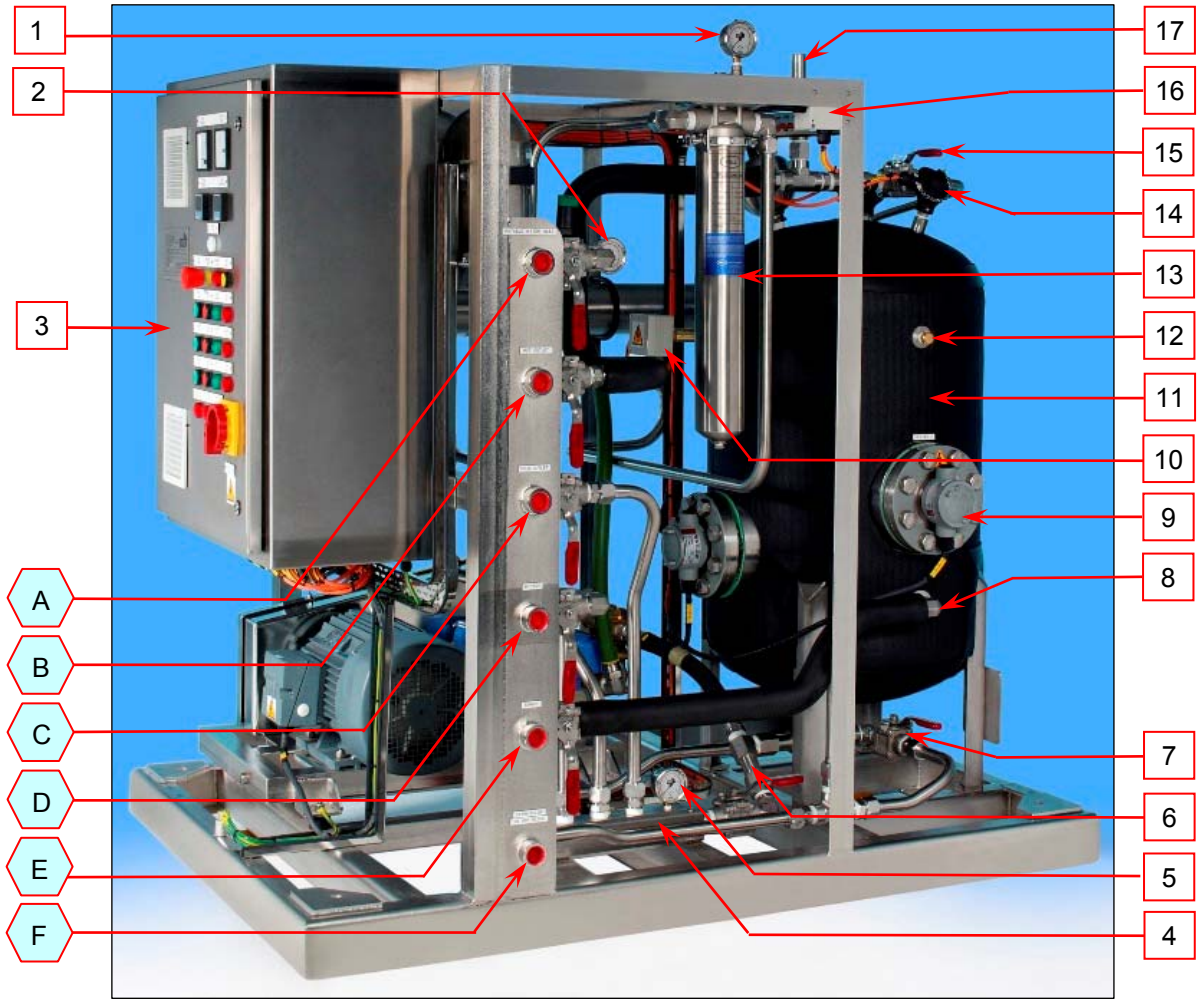

Figure 3: Left Side View

No	Description	Divex P/No.
A	Ship's LP potable water supply inlet	-
B	HP hot water outlet connection	-
C	HP cold water outlet connection	-
D	HP bypass, 1" NPT connection	-
E	HP hot water syphon return connection	-
F	Tank drain & safety valve discharge	-
1	Filter element differential pressure gauge	PBBA63BB02QJ2A
2	Potable water supply pressure gauge	PBBA63BB02QJ2A
3	Control panel	04946
4	Booster pump HP manifold	04962
5	Pressure gauge, booster pump delivery	PSBA63BB02QJ3A
6	Non-return valve, HP manifold inlet	04349
7	Calorifier tank drain valve	04335
8	Thermo-syphon return to calorifier tank	-
9	Heater element ass'y, 3 off 6 kW 440 V 60 Hz	00121
10	Calorifier tank water level switch	04281
11	Calorifier pressure vessel, 150 litre	04199
12	Zinc anodes, 2 off	02369
13	Inlet water particle filter	04874
14	Temperature probe, safety, PT 100	04434
15	Calorifier tank air vent valve	04335
16	Filter pressure sensor termination enclosure	02667
17	Calorifier tank safety valve, set 45 bar	04404

2.4 Right Side Layout

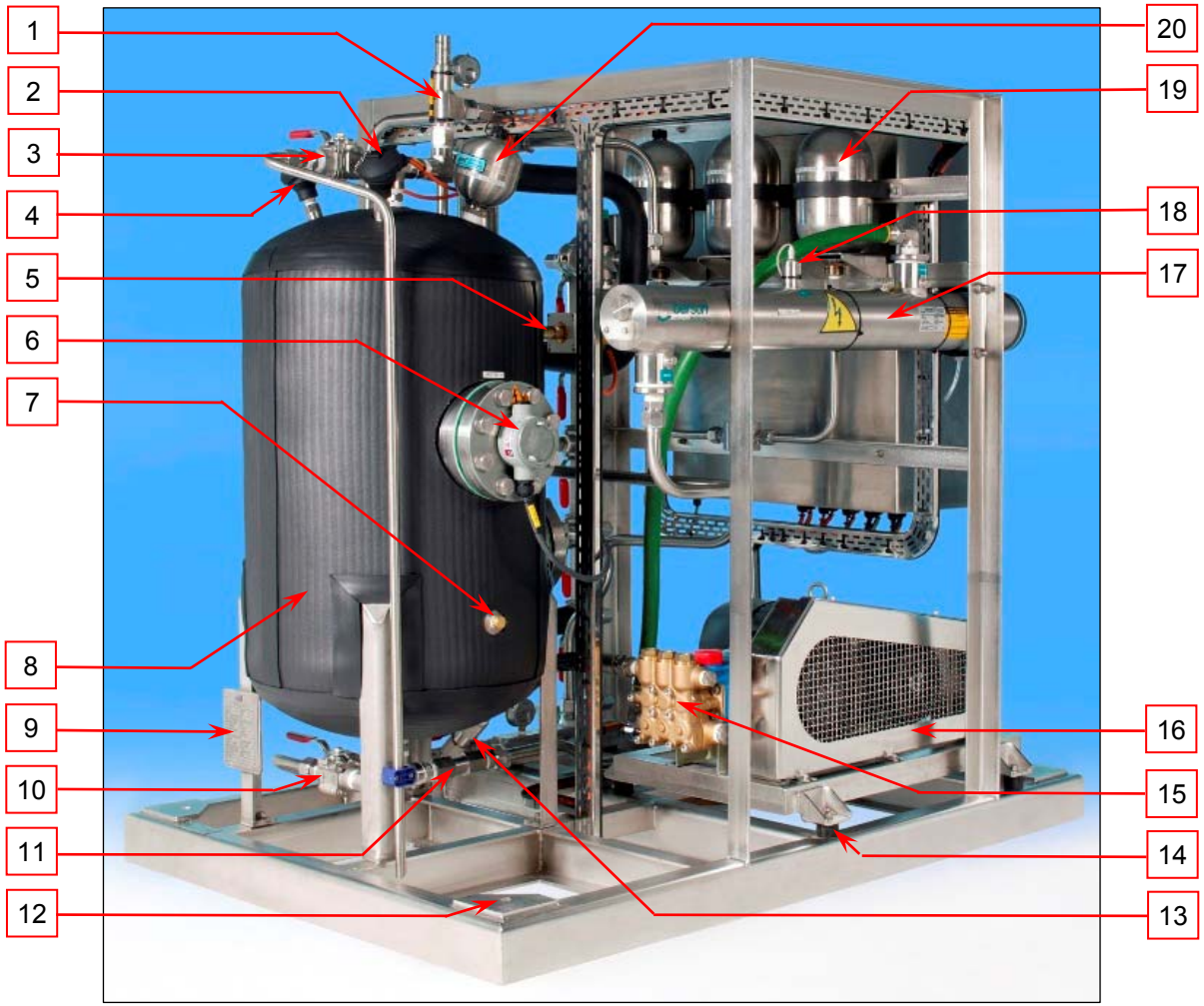

No.	Description	Divex P/No.
1	Calorifier tank safety valve, set 45 bar	04404
2	Temperature probe, process control, PT 100	04434
3	Calorifier tank air vent valve	04335
4	Temperature probe, safety, PT 100	04434
5	Calorifier tank water level switch	04281
6	Heater element ass'y, 3 off 6 kW 440 V 60 Hz	00121
7	Zinc anodes, 2 off	02369
8	Calorifier pressure vessel, 150 litre.	04199
9	Data plate, calorifier pressure vessel	05004
10	Calorifier tank drain valve	04335
11	Non-return valve, calorifier tank inlet	04349
12	Lifting eye bolt-hole, M16	-
13	Non-return valve, HP manifold inlet	04349
14	Vibration mounting, pump & motor sub-frame	04973
15	Booster pump, triplex	04303
16	Belt guard	04950 & 04951
17	UV water sterilizer	00155
18	UV sensor	00155
19	Hydraulic accumulators, booster pump, 3 off	04889
20	Thermal expansion accumulator	04370

Figure 4: Right Side View

2.5 Rear Layout

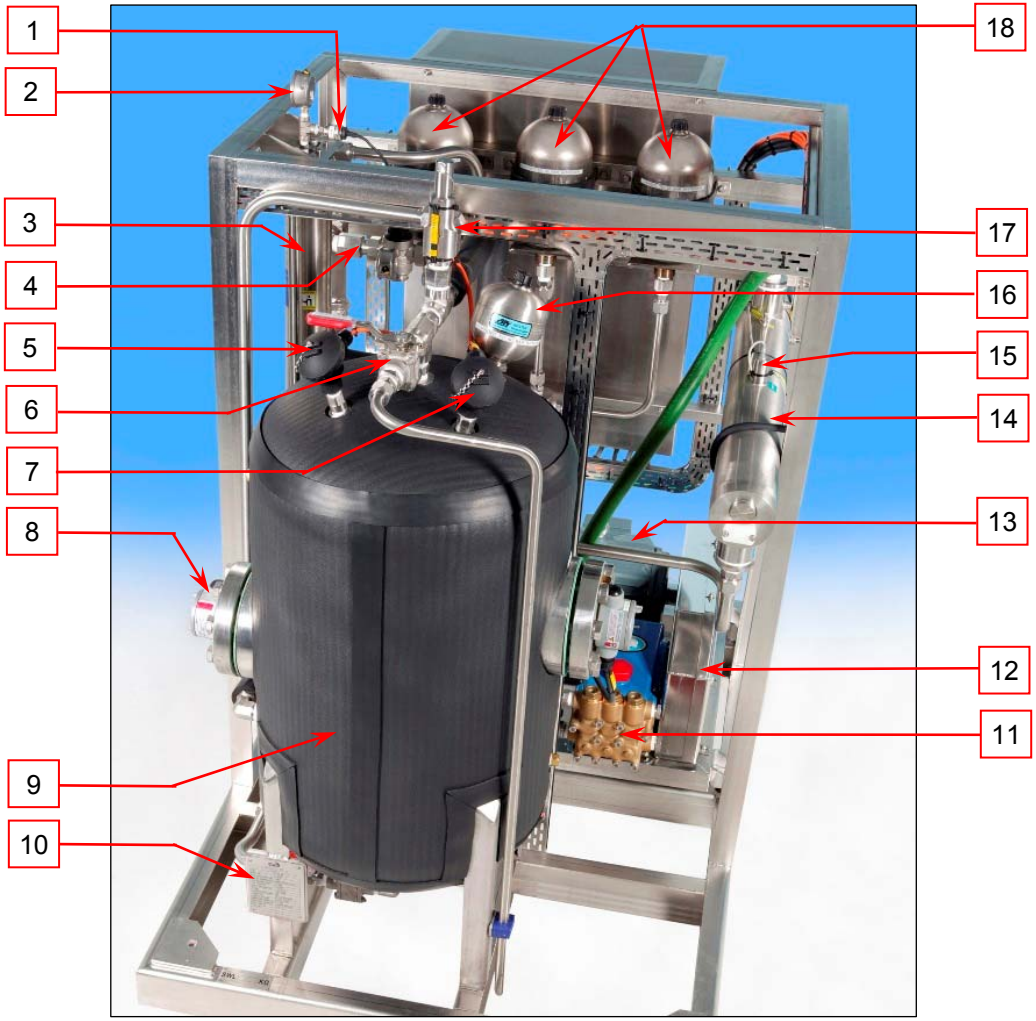

Figure 5: Rear View

No.	Description	Divex P/No.
1	Inlet water low pressure cut-out switch	03723
2	Filter element differential pressure gauge	PBBA63BB02QJ2A
3	Inlet potable water filter	04874
4	Inlet water pressure reducing valve	04998
5	Temperature probe, safety, PT 100	04434
6	Calorifier tank air vent valve	04335
7	Temperature probe, process control, PT 100	04434
8	Heater element ass'y, 3 off 6 kW 440 V 60 Hz	00121
9	Calorifier pressure vessel, 150 litre.	04199
10	Data plate, calorifier pressure vessel	05004
11	Booster pump, triplex	04303
12	Belt guard	04950 & 04951
13	Electric motor, 7.5 kW, 440 V 3 phase, 132 M	02777
14	UV water sterilizer	00155
15	UV sensor	00155
16	Thermal expansion accumulator	04370
17	Calorifier tank safety valve, set 45 bar	04404
18	Hydraulic accumulators, booster pump, 3 off	04889

2.6 Control Panel

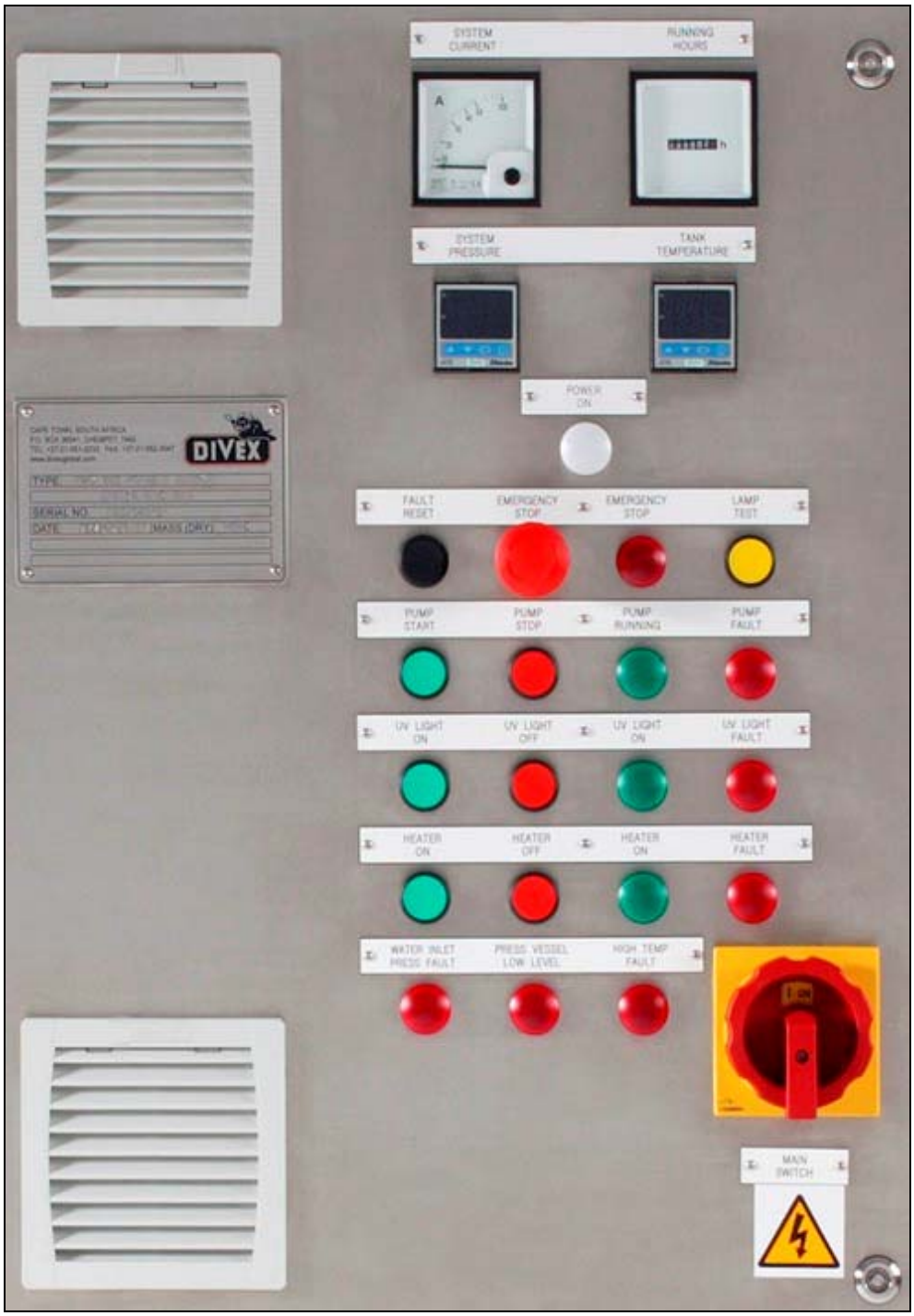

Figure 6: Control Panel Layout

3.0 INSTALLATION AND COMMISSIONING

Installation

3.1 Lifting should only be carried out by competent persons.

	CAUTION
	RIGGING AND LIFTING **Always lift the unit using all four lifting eyes and a suitable lifting spreader frame to prevent distortion of the handling frame or damage to the pipe-work and other hardware. To ensure that the equipment is lifted safely and correctly, Divex recommends that the Divex ECS Lifting Spreader Frame, Part No. KI05453 is utilised for all lifting operations.**

3.2 Ensure that the unit is installed on a suitable level foundation in a well ventilated compartment or area and bolted down using the four M12 mounting holes provided for this purpose.

3.3 Allow adequate space around the skid for maintenance access, including for the removal and replacement of large components such as the heater elements or calorifier.

3.4 Ensure that supply and return pipe-work between the skid and the ring main piping system is suitably sized to prevent line losses, back-pressure build-up or pump cavitation. Equally, ensure that the ring main piping system itself is suitably sized for the same reasons.

	DANGER
	SAFETY VALVE DISCHARGE PIPE-WORK **No valves of any sort may be installed in the safety valve discharge pipe-work since accidental closure could prevent the safety valve from discharging, with possible dangerous or life-threatening consequences.**

	CAUTION
	SAFETY VALVE DISCHARGE PIPE-WORK **Ensure that the calorifier tank drain and safety valve discharge (Figure 3 Item F) is piped to discharge in a safe place. The pipe run should be 1″ or larger and as short as reasonably possible to prevent back-pressure in the line when the safety valve discharges. Back pressure occurs as a result of flow restrictions caused by too small a pipe diameter. Back pressure in the safety valve discharge pipe-work <u>will alter the effective set pressure of the safety valve.</u>**

3.5 Ensure that the ring main piping system and supply/return pipe-work to the skid is thermally insulated.

3.6 Ensure that the power supply to the unit is 440V 60 Hz 3 phase and that the ship supply is rated for 35A.

3.7 Ensure that the power supply is properly connected in accordance (1) with the dive system's classification society rules and (2) in compliance with national standards.

Commissioning in Single Unit Configuration

3.8 Ensure the pump is filled to the correct level with ISO 68 hydraulic oil and it rotates in the correct direction.

3.9 Close all skid inlet and outlet isolating valves, including the calorifier vessel drain.

3.10 Put the ship's cold potable water supply on line to the skid and verify that line pressure is within the range of 5 to 12 bar. Verify that the inlet manifold pressure regulator is set to deliver 6 bar to the booster pump inlet.

IMPORTANT
If the water supply to the skid is less than the regulator set pressure of 6 bar, the regulator's main valve will remain open, allowing the water to flow freely through the regulator. When the water supply pressure increases to above 6 bar, the regulator will begin operating and maintain the pressure at 6 bar.

3.11 Gently open the ship's potable water supply isolating valve at the skid inlet manifold and allow the skid pipe-work and calorifier tank to fill with potable water.

3.12 Open the calorifier tank vent valve at the top of the calorifier to vent trapped air. The booster pump may also be used to assist with venting. Allow water to run out the vent overflow until no more air is present in the overflow stream, close the vent valve and switch the pump off.

3.13 Hot and cold potable water delivery pressure to the chambers is controlled by the booster pump pressure controller (labelled “System Pressure”) on the control panel. It is factory set for a minimum pressure (pump start) of 35 bar and a maximum pressure (pump stop) of 43 bar. If different set-points are required, the pressure controller can be re-set by following the manufacturer’s instructions provided in Appendix 11 Shinko.

3.14 Function-test the calorifier vessel safety valve as follows:

1. Reset the booster pump cut-out pressure on the “System Pressure” pressure controller (on the control panel) to 50 bar in accordance with the manufacturers instruction provided in Appendix 11 Shinko.
2. Switch the booster pump on and allow the calorifier tank pressure to increase until the safety valve opens at 45 bar.
3. With the pump operating at maximum speed and the safety valve open, the calorifier vessel pressure should never exceed 49.5 bar (MAWP + 10%).
4. If the calorifier vessel pressure reaches or exceeds 49.5 bar, reset the safety valve.
5. Record the test result in the Maintenance Logbook.

	WARNING
	SAFETY VALVE AND PRESSURE RELIEF PIPE-WORK **Prior to conducting this test, ensure that all drain/pressure relief pipe-work is operational and the calorifier safety valve has not been tampered with or set to any pressure other than 45 bar; if in doubt, bench-test the valve first.**

	CAUTION
	BOOSTER PUMP CUT-OUT PRESSURE RESET **When the test has been completed, reset the booster pump cut-out pressure to 43 bar and confirm the system is operating correctly.**

3.15 Bleed the hot and cold ring main pipe-work to the chambers:

1. Ensure the ship’s potable water supply is on line to the skid at a pressure of between 4 to 12 bar and that the inlet manifold pressure regulator is delivering potable water to the skid at 6 bar.
2. Open the hot and cold ring main pipe-work high point vent valves and place a sufficiently large container at each to catch overflow potable water. Attaching a short length of hose to each vent valve will help prevent spillage.
3. Switch on the booster pump.
4. Open the hot and cold potable water supply valves and the hot water thermo-syphon return valve at the skid outlet manifold and allow the ring main pipe-work to fill with water. Open chamber consumers as required to vent chamber pipe-work (downstream of the ring main).

5. When no more air is present in the various overflow streams, close each ring main high point vent valve and chamber consumer supply valve independently at the appropriate moment.

	WARNING
	INJURY FROM SPLUTTERING WATER DISCHARGE **Entrapped air in a water stream venting at 45 bar will cause spluttering of considerable force. All necessary precautions, especially the use of suitable eye protection, should be taken to prevent personal injury or spillage.**

3.16 Switch on the calorifier vessel immersion heaters and allow the calorifier to attain its full working temperature of 55°C. This should take approximately 20-25 minutes. Check for leaks or any other abnormalities.

3.17 Hot water temperature is controlled by the calorifier temperature controller (labelled “Tank Temperature”) on the control panel. It is factory set for a working temperature of 55°C. If a different set-point is required, the temperature controller can be re-set by following the manufacturer’s instructions provided in Appendix 11 Shinko.

3.18 Open all chamber hot water consumer valves sequentially and fill the hot water ring main and branch pipe-work (to the individual chamber locks) with hot water, closing the valves when hot water flows steadily. Wait for 30 to 60 minutes and then verify that the thermo-syphon return is functioning correctly. This is accomplished by removing the thermal insulation from the thermo-syphon return pipe-work just before it enters the skid and checking its temperature, either by feel or using a temperature probe. The return temperature should be approximately 40°C. If the thermo-syphon return does not function (pipe-work is not warm), check that the thermo-syphon return valve at the skid outlet manifold is fully open and that all ring main return valves are open.

3.19 Test the safety temperature controller (mounted inside the electrical control panel). Ensure the calorifier vessel is filled with water and disconnect the process temperature controller. Switch on power to the immersion heaters and allow the temperature to rise to 75°C, at which point the safety temperature controller will shut down the elements and activate the high temperature fault light. If not, reset the safety temperature controller in accordance with the manufacturer’s instructions provided in Appendix 11 Shinko. When complete, reinstate the process temperature control and verify its correct operation. Record the test result in the Maintenance Logbook.

3.20 Check that the booster pump is not causing any hydraulic pulsing in the downstream hot and cold pipe-work and in the calorifier. If it does, the hydraulic accumulator bladders may be incorrectly pressurized or may be faulty. Refer to the manufacturer’s instructions provided in Appendix 10 Hydac Technology.

3.21 Record the Commissioning Procedure in the Maintenance Logbook.

3.22 Once the commissioning sequence described above has been completed satisfactorily, the PWS-RM2 Potable Water Supply Skid is ready to be placed into service.

Commissioning in Master/Slave Configuration

3.23 Commission the master unit in accordance with steps 3.9 to 3.22 above.

3.24 Commission the slave unit in accordance with steps 3.9 to 3.14 above.

3.25 Confirm that the slave unit booster pump start and stop pressures are 5 bar below those of the master unit, namely pump start @ 30 bar and pump stop @ 38 bar at the booster pump pressure controller (labelled “System Pressure”) on the control panel. Follow the manufacturer’s instructions detailed in Appendix 11 Shinko to adjust pressures if required.

3.26 Complete the slave unit commissioning procedure by following steps 3.15 to 3.22 above.

4.0 START-UP & OPERATION

The start-up sequence detailed in this section must be followed each time the PWS-RM2 Potable Water Supply Skid is started up.

Before attempting to operate the equipment, the operator must be familiar with the contents of this manual and the various component manufacturer's operating information sheets provided in the Appendixes. He must also be familiar with the lay-out and position of all major components and controls on the unit.

4.1 Start-Up Sequence

Single-Unit Configuration:

1. Ensure the ship's potable water supply is on line to the skid and pressure is within the range of 5 to 12 bar. Check the pressure regulator is set to deliver potable water to the booster pump at 6 bar.

2. Open the hot and cold potable water delivery valves and the thermo-syphon return valve.

3. Check the booster pump crankcase oil level. Top up as required with ISO 68 hydraulic oil.

4. Switch on the main power supply switch.

5. Switch the heater on. Monitor the current draw on the control panel ammeter and ensure it reads approximately 24A. Wait for 20-25 minutes while the water in the calorifier heats up to 55 ºC.

6. Start the booster pump and monitor the downstream pressure increase. It should rise to 43 bar and the booster pump should slow down and stop once full pressure has been attained. Total current draw for the heater and pump in operation together should be approximately 33.5A.

7. Check the UV Sterilization unit is functioning by ensuring that the UV Light Fault warning light on the control panel is not illuminated.

Master/Slave Configuration:

1. Follow steps 1 to 5 above (for single unit configuration start-up) for both the master and slave units.

2. Start the slave unit booster pump and monitor the downstream pressure increase. It should rise to 38 bar and the booster pump should slow down and stop once full pressure has been attained. Total current draw for the heater and pump in operation together should be approximately 33.5A.

3. Start the master unit booster pump and monitor the downstream pressure increase. It should rise to 43 bar and the booster pump should slow down and stop once full pressure has been attained. Total current draw for the heater and pump in operation together should be approximately 33.5A.

4. Check the UV Sterilization units of both the master and slave units are functioning by ensuring that the UV Light Fault warning light on the control panel is not illuminated.

4.2 During Operation

1. Ensure that all valves remain in their selected fully open or fully closed positions.
2. Monitor the system for leaks in pipe-work, fittings, valves, and pump shaft seals.
3. Monitor the pressure drop across the potable water inlet filtration system. A pressure differential greater than 2 bar indicates a clogged filter cartridge, which should be changed as soon as possible.
4. Monitor the pump and pump motor for excessive noise, vibration or heat build-up.

5.0 AFTER USE

1. Switch off the heater/s.
2. Switch off the pump/s.
3. Close all valves.
4. Switch off the main isolating switch/es.

6.0 MAINTENANCE

6.1 The PWS-RM2 Potable Water Supply Skid is designed to be a low-maintenance system. However, it does however require constant monitoring to ensure safe and trouble-free operation.

6.2 All system pipe-work, fittings, flanges and control valves must be maintained in clean, leak-free condition at all times. Tighten joints as required. Maintain pump seals in accordance with the manufacturer's instructions provided in the Appendix 2 CAT Pumps.

6.3 Thermal insulation must be kept in good condition at all times. Damaged insulation will result in loss of heat and consequent performance degradation.

6.4 The PWS-RM2 Potable Water Supply Skid must be maintained in accordance with the service schedule provided in Section 7.0.

6.5 The component parts of the PWS-RM2 Potable Water Supply Skid must be maintained in accordance with the respective manufacturer's instructions presented alphabetically in the Appendixes section. For quick reference, components are indexed to their respective manufacturer's names in the table below:

Component	Appendix	Manufacturer
Accumulator, hydraulic	**8**	Hydac Technology
Accumulator, thermal expansion	**2.3**	CAT Pumps
Booster pump (Service Manual)	**2.2**	CAT Pumps
Booster pump (Specification Sheet)	**2.1**	CAT Pumps
Electrical control panel	**6**	HB Systems
Filter cartridge	**10.2**	Pall Corporation
Filter housing	**10.1**	Pall Corporation
Heaters	**13**	Watlow
Level switch	**4**	Flotect
Non-return valve	**5**	Ham-Let
Pressure controller	**11.1 & 11.2**	Shinko
Pressure gauges	**14.1**	Wika
Pressure regulating valve	**7**	Honeywell
Pressure sensor/transmitter	**14.2**	Wika
Quarter-turn valves	**15**	Worcester Controls
Safety valve	**9**	Leser
Temperature controller, process	**11.1 & 11.2**	Shinko
Temperature controller, safety	**11.1 & 11.2**	Shinko
Temperature sensor, process	**14.3**	Wika
Temperature sensor, safety	**14.3**	Wika
UV sterilizer	**1**	Berson UV Techniek
Variable speed drive	**12**	Siemens
Zinc anodes	**3**	Divex

7.0 SERVICING

7.1 Only suitably qualified personnel should be authorised to carry out servicing or repairs to the PWS-RM2 Potable Water Supply Skid. If in doubt, contact Divex.

7.2 Use only genuine manufacturer's spare parts in this product. Use of other manufacturer's parts may cause degradation of performance or failure and will invalidate the warranty.

7.3 Daily Service (12 - 24 hours)

1. Check pressure drop across the inlet potable water filter and replace filter cartridges as required.
2. Check electrical current draw to verify pump motor and heater are performing satisfactorily.
3. Check pumps and pump motors for excessive heat, noise or vibration.

7.4 1st 50 Hours Service

1. Change booster pump crank-case oil in accordance with the manufacturer's instructions provided in Appendix 2 CAT Pumps.

7.5 Weekly Service

1. Check booster pump crankcase oil level.
2. Check booster pump V-belt tension.
3. Check pipe-work, fittings, flanges and pump shaft seals for leaks.
4. Perform lamp test, ensure all lamps are function correctly.

7.6 Monthly Service

1. Change booster pump crank-case oil every 500 operating hours or monthly, whichever occurs first, with multi-viscosity ISO 68 hydraulic oil in accordance with the manufacturer's instructions provided in Appendix 2 CAT Pumps.
2. Remove and clean electrical enclosure fan covers/filters. Ensure correct operation of cooling fan.

7.7 Six-Monthly Service

1. Calibrate process and safety temperature controller set-points as follows:
   - Reset process temperature controller 5°C above safety temperature controller setting, namely to 80°C.
   - Confirm safety temperature controller is set at 75°C and that it operates correctly.
   - Reset process temperature controller back to its 55°C set point and confirm that it operates correctly.
2. Function test calorifier vessel water level sensor as follows:
   - Close all water supply valves.
   - Open vent valve and drain valve and as water level drops the float level switch will operate and shut down system.
   - Close drain valve, open supply valves, refill tank then close vent valve.
3. Function test inlet water low pressure switch as follows.
   - Slowly shut water inlet valve while pump is in operation.
   - Pressure will drop to 2 bar and system will shut down and low pressure alarm light will illuminate.

4. Function-test LP potable water supply and pump HP outlet manifold pressure gauges.
5. This test is a visual examination.
6. Verify pump performance: Adequate delivery volume & pressure and no degradation of performance (valves not leaking and ceramic plungers not worn).
7. Replace booster pump seals in accordance with the manufacturer's instructions provided in Appendix 2 CAT Pumps.
8. Check the charge pressure of the booster pump outlet accumulator and recharge with nitrogen to 40.5 bar as required (40.5 bar for the slave unit as well if operating in master/slave configuration).
9. Check the charge pressure of the thermal expansion accumulator on the calorifier vessel and, if necessary, recharge with nitrogen to 40.5 bar (40.5 bar for the slave unit thermal expansion accumulator as well if operating in master/slave configuration).
10. Inspect zinc anodes for galvanic corrosion. If depleted more than approximately 25% of original size, replace as required. Dimensions are provided in Appendix 4 Divex.
11. Function test UV sterilizer as follows:
12. Disconnect the sensor cable - UV fault indicator should be activated.
13. If the quality of ships potable water supply is questionable, clean the exterior surface of the quartz tube in accordance with the manufacturers instructions provided in Appendix 1 Berson UV Techniek.
14. Inspect pipe-work and calorifier vessel insulation and repair or replace as required.

7.8 Annual Service

1. Perform heater element insulation resistance test – 1 Mega OHM minimum.
2. Perform motor insulation resistance test – 1 Mega OHM minimum.
3. Replace booster pump valves and seals in accordance with the manufacturer's instructions provided in Appendix 2 CAT Pumps.
4. Inspect entire system for any corrosion. Clean, remove or repair as required.
5. Visually inspect cables, glands and electrical fittings and ensure all are secure and in good

a. working order.

6. Perform electrical enclosure internal inspection, clean as required and ensure all components and wires are secure and in good working order.
7. Perform calorifier pressure vessel inspection in accordance with statutory or ship's classification authority requirements.

8.0 FAULT FINDING

This section provides fault-finding guidance by describing the function of the control panel indicator lights, warning lights, switches and controls, starting at the ***top row*** of the panel and working from left to right.

1.	**Power On (white light):**	Indicates mains power to the system is on.
2.	**Fault Reset (black switch):**	Restores all electrical switches and breakers from fault condition back to normal operating condition.
3.	**Emergency Stop (red switch):**	Shuts all electrical systems down in an emergency.
4.	**Emergency Stop (red light):**	The manual emergency stop gong-switch has been activated and the heater, UV Sterilization unit and booster pump shut down. When the cause of the emergency stop situation has been rectified, unlatch the emergency stop switch and press the black fault reset switch to switch the emergency stop warning light off.
5.	**Lamp Test (yellow switch):**	Tests all *normal operation* and *fault condition* indicating lamps.
6.	**Pump Start (green switch):**	Switches the booster pump on.
7.	**Pump Stop (red switch):**	Switches the booster pump off.
8.	**Pump Running (green light):**	Indicates the booster pump is running.
9.	**Pump Fault (red light):**	Indicates a fault with the pump motor VSD, a pump overload condition, or a fault with the pump motor circuit. ● Check the pump and VSD circuit breakers. ● Refer to the electrical schematic diagrams in Appendix 6 HB Systems and determine the cause of the fault. Repair or replace the faulty component as required.
10.	**UV Light On (green switch):**	Switches the UV sterilizer on.
11.	**UV Light Off (red switch):**	Switches the UV sterilizer off.
12.	**UV Light ON (green light):**	Indicates the sterilizer is on.
13.	**UV Light Fault (red light):**	UV Sterilization light has failed. ● Check UV light circuit breaker. ● Check status of the UV light tube and replace as required.
14.	**Heater On (green switch):**	Switches the immersion heaters on.
15.	**Heater Off (red switch):**	Switches the immersion heaters off.
16.	**Heater On (green light):**	Indicates the immersion heaters are switched on.
17.	**Heater Fault (red light):**	A failure has occurred in the heater electrical circuit, possibly caused by a low water level in the calorifier tank, a high process control temperature or a high safety control temperature. ● Check the heater circuit breakers. ● Check the calorifier tank water level. ● Check the process temperature controller setting & function.

●Check the safety temperature controller setting & function.
● Refer to the electrical schematic diagrams in Appendix 6 HB Systems and determine the cause of the fault.
● Repair or replace the faulty component as required.

18. Water Inlet Pressure Fault (red light): The pressure of the ship's potable water supply to the skid has dropped to below the minimum set-point of 2 bar and the pressure switch has shut the pump down to prevent it from cavitating or running dry.
● Check the inlet filter is not clogged.
● Check the ship's potable water supply pressure.
● Check for leaks in the ship's potable water supply pipe-work.

19. Pressure Vessel Low Level Fault (red light): Calorifier tank water level is low and the immersion heaters have been switched off.
● Check no air is trapped in the calorifier vessel and vent as required when topping up.

	WARNING
	SCALDING INJURY **Take care to prevent scalding injuries when venting the calorifier vessel.**

● Determine the reason for water level drop and rectify.
● Check for leaks in the calorifier vessel and supply pipe-work.
● Check calorifier vessel drain valve is closed.

20. High Temperature Fault (red light): The temperature of the water in the calorifier vessel exceeds the operating temperature of 55°C.
● The process temperature sensor (thermometer) and/or temperature controller is/are faulty.
● Test, reset or replace the sensor and controller as required.

9.0 TECHNICAL SPECIFICATION

Note: The specification provided below is for one PWS-RM2 skid.

9.1 Power Supply

System power requirement	: 440V 60Hz 3 Phase 35A

9.2 Potable Water Supply

Fluid	: Cold potable water
Peak demand	: 7.5 m^3/hour
Supply pressure range	: 5 bar min. to 12 bar max.
Supply regulator set pressure	: 6 bar
Supply pressure failure protection	: Pressure switch, set to cut booster pump out @ 2 bar
Inlet connection	: 1” NPT female (located on side of frame)

9.3 Potable Water Delivery

Max. potable water delivery rate	: 60 litres/minute (hot or cold)
Outlet connections	: 1” NPT female (located on side of frame)

9.4 Water Filtration & Sterilization

Filter housing	: Pall Corporation IDL Series, V-Clamp Type, stainless steel
Filter element	: Pall Corporation Claris® Series, particulate filtration to 5μm
UV Sterilizer	: Berson UV Techniek StreamLine Model 10.000 Water
	: Sterilizer with UV sensor
UV Sterilizer voltage	: 110V 60Hz 1 Phase

9.5 Booster Pump

Make & type	: CAT Type 1540E variable speed triplex
Voltage	: 440V 60Hz 3 Phase
Variable speed drive	: Siemens MicroMaster Type 440, 7.5kW
Head (max)	: 45 bar
Delivery	: 60 litres/minute max
Accumulators	: Hydac Type SBO50-4E, 4 litre volume (3 off = 12 litres total),
	: each accumulator charged to 40 bar
Boost pressure control	: Inline pressure sensor/transmitter and digital pressure controller
	: with readout at control panel provides feedback signal to VSD
	: for pump speed control and start/stop
Pressure sensor	: Wika Model S-10
Pressure controller	: Shinko Model ACS-13AAM
Pressure controller set-points	: *Single unit configuration:*
	Start 35 bar, stop 43 bar
	: *Master/slave configuration:*
	Master unit start 35 bar, stop 43 bar
	Slave unit start 30 bar, stop 38 bar

9.6 Calorifier Tank (Pressure Vessel)

Pressure vessel design code	: ASME VIII DIV 1 - 2004
Volume	: 150 litres
Working pressure, max. allowable	: 45 bar @ -10°C to 80°C
Material of construction	: ASTM A240 Grade 316 (shell & heads)
	: ASTM A182 Grade 316L (flanges & nozzles)
Thermal expansion accumulator	: CAT Model 6013, 0.75 litre volume
Safety valve setting	: 45 bar
Water level switch	: Flotect® L6EPB Series
Galvanic corrosion protection	: Zinc anodes

9.7 Calorifier Heater

Make & type	: 3" Watlow Process Heater ANSI Class 600
Voltage	: 440V 60Hz 3 Phase
Immersion heating elements	: 3 off 6 kW elements
Heating capacity	: 18 kW
Material of construction	: Flange Grade 316 stainless steel
	: Elements Grade 316 stainless steel
Process temperature controller	: Shinko Model ACS-13ARM, set 55°C
Process thermometer	: Wika TR7X0 Series resistance thermometer
Safety temperature controller	: Shinko Model ACS-13ARM, set 75°C
Process thermometer	: Wika TR7X0 Series resistance thermometer

9.8 Frame

Construction	: Welded Grade 316 stainless steel channel section base and
	: angle section frame

9.9 Physical Data

Dimensions	: 1625mm L x 1100mm W x 1650mm H
Weight (dry)	: 745 kg

10.0 RECOMMENDED SPARE PARTS LISTS

10.1 Recommended Electrical Spare Parts

Refer to Appendix 6 HB Systems and see Drawing No. HBN221 for Parts Identification

Qty	Part No.	Description
1	BE-20MCT/05/1	Current Transformer 50:1 1.5VA Hole Dia 21mm
1	BEA01AT7/1A Ammeter 72mm	CT Operated Ammeter 72mm */1A
1	BEHCD/7	Running Hour Meter 10-60VDC
1	55.32 230VAC 10A 2w	Relay 10A 2W
1	55.32 24VDC 10A 2w	Relay 10A 2W
2	55.34 24VDC 5A 4w	Relay 5A 4W 55.34
1	94.02	Relay Base 10A 2W 55.31/32
2	94.04	Relay Base 10A 4W 55.34
1	99.02.0.230.59	LED and Diode Module 110-240VAC/DC for 94.02/4
2	99.02.9.024.99	LED and Diode Module 6-24VDC for 94.02/4 etc
1	MC100 CB 1P 0.5A	Circuit Breaker 1P 6KA 0.5A C-Curve
1	MC102 CB 1P 2A	Circuit Breaker 1P 6KA 2A C-Curve
1	MC202 CB 2P 2A	Circuit Breaker 2P 6KA 2A C-Curve
1	MZ201	Aux Contact for Hager CB
1	NC332 CB 3P 32A	Circuit Breaker 3P 10KA 32A C-Curve
1	ND206 CB 2P 6A	Circuit Breaker 2P 10KA 6A D-Curve
1	KTS1141	Thermostat NO
1	DRH-120-24	Power Supply 24VDC 5A 340-550VAC
1	PF 2000 24VDC 14W/19W	Filterfan PF 2000 24VDC
1	PFA 2000	Exhaust Filter PFA 2000
2	3005073	Standard Terminal 10mm² UK10N
4	3031212	Standard Spring Cage 2,5mm² ST2,5
1	3031212/PE	Standard Spring Cage 2,5mm² ST2,5 PE
4	3031364	Standard Spring Cage 4mm² ST4
1	3031364/PE	Standard Spring Cage 4mm² ST4 PE
1	50 Ohm	R-Measuring Resistor
1	DCL-33A-R/M 24V	PID Controller Relay Out 1 evt 24VDC/AC
1	JCS-33A-A/M1,TA	PID Controller 4-20ma Out 1 AL 24VDC/AC, RE-TR
1	3LD2514-0TK53	Emergency Off Isolator 22kW 63A base
1	3RT1023-1BB40	Contactor 4KW DC 24V, 3P S0, Screw

1	3RT1926-1BB00	Varistor, AC 24-48 V, DC 24-70 V, s0,s2
1	3RV1021-4CA10	Circuit Breaker, s0, Motor; 17-22 A, Screw
1	3RV1901-1E	Aux Contact on top 1no + 1nc s00-s3,
1	3SB3000-0AA11	Pushbutton Fl. Bk, 22mm
1	3SB3000-0AA21	Pushbutton Fl. R, 22mm
1	3SB3000-0AA31	Pushbutton Fl. Y, 22mm
1	3SB3000-0AA41	Pushbutton Fl. Gr, 22mm
1	3SB3000-1HA20	Emergency Stop PB Twist Release + Holder
2	3SB3001-6BA20	3SB3001-6 Indicator Light Red
1	3SB3001-6BA40	3SB3001-6 Indicator Light Green
1	3SB3001-6BA60	3SB3001-6 Indicator Light White
2	3SB3400-0B	Contact Block, 1NO
1	3SB3400-0C	Contact Block, 1NC
2	3SB3400-1PB	Lamp Holder, LED Red 24V
1	3SB3400-1PC	Lamp holder, LED Green 24V
1	3SB3400-1PE	Lamp holder, LED White 24V
1	3TK28 21-2CB30	Safety Combination Relay 3NO 1NC Spring 24VAC/DC
1	4AM40 42-5CT10-0FA0	Transformer 1 Phase 440V +/-5% /230V 250VA
1	6SE6400-0BP00-0AA0	VSD Operator Panel
1	6SE6400-3CC02-2CD3	Commutation Choke 3ph MM440 5.5kW, 7.5kW
1	6SE6440-2UD27-5CA1	VSD mm440 380V-480V 3ph 7.5kW

10.2 Recommended Mechanical Spare Parts

Item	Description	Unit	Qty
04281	Level switch, wall mounting L6EPB-S-S-30	Each	1
00155 Kit	Kit, Streamline 10,000 UV Sterilizer	Each	1
04303	Pump, CAT Type 1540E, 65 litre/min @ 55bar	Each	1
04303 Kit	Seal kit, CAT Type 1540E pump	Each	2
03723	Switch, pressure, adjustable, Type APS-350	Each	1
00121	Heater element, 3" 600 lb flange 6kW	Each	1
04329	Pressure transmitter 4-20 mA Type S-10	Each	1
04335	Valve, ball, 1" NPT, 44 Series, 316 St St	Each	1
04335 Kit	Seal kit, ball valve, 1" NPT, 44 Series, 316 St St	Each	1
04349 Kit	Seal kit, check valve, 1" NPT female, 316 St St	Each	1
PSBA63BB02QJ3A	Gauge, pressure, bottom entry, 0-100 bar, GL	Each	1
PBBA63BB02QJ2A	Gauge, pressure, bottom entry, 0-10 bar, GL	Each	2
04404 Kit	Seal kit, relief valve, 1" BSP, 45 bar, 316 St St	Each	1
04769	Filter cartridge, Pall 20" 5 µm rating	Each	4
02369	Anode, ½" NPT, brass plug &100 mm zinc rod	Each	4
04434	PT 100 Temp probe, 200mm, ½ " NPT 316 St St	Each	1
05040	V-Belt SPB x 1260 Fenner	Each	4
03764	Oil SAE 40 / ISO 68, CAT pump	Litre	5
04549	Gasket for 3" 300lb ANSI B16.5 flange	Each	3

COMPONENT MANUFACTURER'S INFORMATION MATRIX

Individual component manufacturers' operating and maintenance information is provided in the appendixes. The information is presented alphabetically in the table below, according to the name of the manufacturer.

Appendix	Manufacturer	Component
1	Berson UV Techniek	UV sterilizer
2.1	CAT Pumps	Booster pump (Specification Sheet)
2.2	CAT Pumps	Booster pump (Service Manual)
2.3	CAT Pumps	Accumulator, thermal expansion
3	Divex	Zinc anodes
4	Flotect	Level switch
5	Ham-Let	Non-return valve
6	HB Systems	Electrical control panel
7	Honeywell	Pressure regulating valve
8	Hydac Technology	Accumulator, hydraulic
9	Leser	Safety valve
10.1	Pall Corporation	Filter housing
10.2	Pall Corporation	Filter cartridge
11.1 & 11.2	Shinko	Pressure controller
11.1 & 11.2	Shinko	Temperature controller, process
11.1 & 11.2	Shinko	Temperature controller, safety
12	Siemens	Variable speed drive
13	Watlow	Heaters
14.1	Wika	Pressure gauges
14.2	Wika	Pressure sensor/transmitter
14.3	Wika	Temperature sensor, process
14.3	Wika	Temperature sensor, safety
15	Worcester Controls	Quarter-turn valves

(Left blank intentionally)

APPENDIX 1 Berson UV Techniek – UV Sterilizer

(Left blank intentionally)

StreamLine UV-System

berson
UV-techniek

User's manual

Model : StreamLine
Edition : September 2003
Version : 11-SL-Eng-20030912

Berson Milieutechniek B.V.
De Huufkes 23
5674 TL Nuenen
The Netherlands
Tel. : +31 (0)40 2907777
Fax. : +31 (0)40 2835755
E-mail : Sales@bersonuv.com
Internet : www.bersonuv.com

Copyright © 2003 Berson Milieutechniek B.V.

All rights and subsequent amendments reserved.
No part of this publication may be reproduced, printed, photocopied, stored on microfilm and/or otherwise made public in any form whatsoever without obtaining the prior written permission of Berson Milieutechniek B.V..

Author: Technisch Adviesbureau de Ruijter, Helmond (NL)

1 INTRODUCTION 5

1.1 SYSTEM OBJECTIVE 5
1.2 DOCUMENTS 5
1.3 DOCUMENT CONVENTIONS 5

2 SAFETY 6

2.1 PICTOGRAMS AND GENERAL SAFETY INSTRUCTIONS 6
2.2 SYSTEM SAFETY FEATURES 7
2.3 BROKEN LAMPS OR QUARTZ SLEEVES 7
2.4 RECOMMENDED USE 8
2.5 NON-RECOMMENDED USE 8
2.6 CE-MARKING 8

3 STORAGE AND TRANSPORT 9

4 SYSTEM DESCRIPTION 10

4.1 DISINFECTION CHAMBER 10
4.2 CONTROL PANEL 12
4.2.1 F-series, system size 2,000 – 10,000, without UV-sensor 12
4.2.2 F-series, system size 2.000 – 10.000, with UV-sensor 12
4.2.3 G-series, system size 24.000 – 100.000, without UV-sensor 13
4.2.4 G-series, system size 24.000 – 100.000, with UV-sensor 13
4.3 POWER SUPPLY 14
4.4 OPTIONS 15
4.4.1 UV-sensor: 15
4.4.2 Manual cleaning 15
4.4.3 Relay for solenoid valve 15
4.5 ACCESSORIES 16

5 INSTALLATION AND PUTTING INTO OPERATION 17

5.1 GENERAL 17
5.2 MECHANICAL INSTALLATION 17
5.3 ELECTRICAL INSTALLATION 17
5.4 PUTTING INTO OPERATION 18

6 OPERATION 19

6.1 GENERAL 19
6.2 MANUAL CLEANING SYSTEM (OPTIONAL) 19

7 CHECKS, MAINTENANCE, SETTINGS AND REPAIRS 20

7.1 CHECKS 20
7.2 MAINTENANCE 21
7.2.1 Cleaning the quartz sleeves with the wiper device (optional) 21
7.2.2 Chemical cleaning of the quartz sleeves 21
7.2.3 Replacing lamps, quartz sleeves and wipe-rings 21
7.2.4 UV-sensor and quartz probe 24
7.3 ADJUSTING THE UV MEASURED VALUE 24
7.4 REPAIRS 25
7.4.1 Explanation of the circuit diagrams 25
7.4.2 Other malfunctions 26

8 SPARE PARTS 27

9 DISPOSAL 27

9.1 GENERAL 27
9.2 RETURNING OLD LAMPS 27

APENDICES:

- SPARE PARTS
- CAPACITY TABLE
- LOGBOOK

1 Introduction

The objective of this manual is to explain clearly to users the installation and operation of the StreamLine UV-system.
Users are advised to study this manual carefully – chapters 2 and 5 in particular are vitally important in guaranteeing user safety.
The people that work with the StreamLine UV-system are expected to have sufficient in-depth knowledge of the applied techniques and a thorough command of the operating instructions and to be aware of the possible dangers and risks.

1.1 System objective

The StreamLine UV-system is designed to disinfect water with UV-exposure. For this purpose, one to three UV-lamps are placed in the liquid flow and powered via a separate control unit. The control unit and LED-indicators are incorporated in the disinfection chamber. The ultraviolet disinfection process inactivates germs, viruses, bacteria, spores, fungi, algae and other micro-organisms quickly and safely. The specific properties of treated liquids such as colour, odour, taste and acidity remain unchanged.
Depending on the model, various options can be fitted to simplify the use of the system and to optimise the quality.

1.2 Documents

In addition to this user's manual, the system is supplied with the following documents:

- CE-declaration
- Circuit diagrams
- Diagram of the lamp configuration
- Mechanical drawings
- Quality certificate

The manual is based on current developments in UV technology. Berson UV-techniek shall retain the right to make amendments to the documentation without being obliged to modify preceding versions.
Store this manual carefully for future use.

1.3 Document conventions

The following terms are used to draw additional attention to specific sections of the text:

Tip	Suggestions and advice for carrying out specific tasks more easily or practically.
Attention!	This remark is placed next to the text to draw the user's attention to possible problems.
Careful!	If procedures are not carried out with due care and attention, the system can be damaged.
Warning!	If procedures are not carried out carefully, the user or other persons could be injured or the system could be seriously damaged.

2 Safety

The StreamLine UV-system is built for easy and efficient operation. Users should nevertheless take proper note of the remarks accompanying the text in this manual and act accordingly.
Persons working on or in the direct vicinity of the system must be familiar with these instructions.
In addition to the instructions in this manual, generally applicable safety rules and regulations must be observed at all times.

2.1 Pictograms and general safety instructions

For using the StreamLine UV-system, the following pictograms and safety instructions are important:

Wear safety glasses to prevent eye injuries from ultraviolet light.
Do not look directly into a UV lamp that is switched on!

Do not unnecessarily expose your skin to UV-radiation.
Wear clean cotton gloves when handling the lamps.
If you do have to hold the lamps, do so by the connectors.

Remember UV-lamps remain hot for a considerable time after they have been turned off.
Allow the lamps to cool off after use for at least 15 minutes.

The disinfection chamber and the control unit have to be wired to an earth leakage fuse with sufficient capacity.
Switch the power supply off before carrying out repair work and maintenance.

Take account of the fact that there is inadequate disinfection if the lamps are not up to temperature or if the lamps have been switched off.

The UV-lamps contain mercury.
Take defective lamps to a depot for chemical waste.
See paragraph 2.3 for details of what to do if a lamp breaks.

The following points of attention should also be taken into account:

- Keep your work area clean and tidy and make sure it is properly illuminated.
- Keep control cabinets closed during normal use.
- Only use original Berson parts.
- Carry out proper maintenance on a regular basis. Read the maintenance instructions in chapter 7.

Tip	If the prescribed user instructions are followed correctly, there is no danger of radiation from the UV lamps.

2.2 System safety features

The StreamLine UV-system is fitted with the following safety features:

- Effective protection against the UV-radiation produced by the lamps.
- Quality control of the UV-lamps in order to monitor the liquid disinfection process.

The following safety stickers have been placed on the system:

- Irradiation chamber.
- Outside the control cabinet.

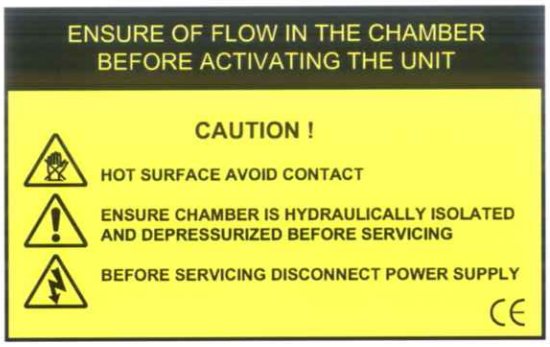

Warning!	Replace stickers if they are damaged or lost!

2.3 Broken lamps or quartz sleeves

Warning!	The UV-lamps contain a small amount of mercury. If a lamp breaks, the mercury has to be collected by binding it with sulphur powder. Carefully remove the mercury after collecting it and take it to a depot for chemical waste in accordance with local regulations. Avoid contact with the skin and eyes, do not breathe in any vapours and make sure there is sufficient ventilation! If necessary, defective or burnt out lamps can be sent back to Berson UV-techniek.

Warning!	If one of the quartz sleeves breaks, shut off the liquid supply pipes immediately and switch the system off. Replace the defective parts and only switch the system on again when all respective internal safety procedures have been completed.

2.4 Recommended use

- The StreamLine UV-system is designed for disinfecting UV-permeable liquids such as drinking water, process water and waste water. For other applications it is advisable to contact Berson UV-techniek.
- There are restrictions when using liquids, which have high concentrations of dissolved minerals or salts. High concentrations of these substances can cause corrosion of metal components. Contact Berson UV-techniek for further information.
- A high concentration of particulates in the medium can cause excess wear. Contact Berson UV-techniek for further information.
- The components that the UV-system is built of may only be used in the configuration described in this document.

2.5 Non-recommended use

- The system may never, under any circumstances whatsoever, be switched on if it is not completely built into the adjoining pipework. The UV-lamps must be shielded at all times to prevent harmful UV-radiation.
- Do not remove plugs or other components which allow any UV-radiation to be emitted to the outside.
- Berson UV-techniek must be consulted before using transparent pipework systems.
- Mechanical modifications to the system, such as drilling holes or welding on parts can damage the system.

2.6 CE-marking

The StreamLine UV-system complies with the EU Directive for machine safety. The respective CE-declaration is supplied separately with the system.

3 Storage and transport

On receipt:
Check the goods on receipt for signs of transport damage. Report any such cases directly to the carrier and your supplier. Take photographs of any damage and store the packaging for inspection.

Storage:
If you do not intend to install the system immediately, it is advisable to store the components in their original packaging. Avoid jolts and excessive vibrations.
UV-lamps must always be stored in the original packaging.
The storage area must meet the following requirements:

- Atmospheric humidity : 10 – 80% RH
- Temperature : 10 – 30 °C.

Unpacking:
Read any instructions and warning messages that may be attached to the packaging. Even though they are packed separately, please bear in mind that the lamps are fragile and should be handled with care. Keep the lamps in their individual original packaging as long as they do not have to be assembled.
Check that your delivery is complete from the packer's receipt. Report any parts that are missing directly to the carrier and your supplier.
When the UV lamps are shipped they are packed separately from the UV-chamber. The lamps should only be fitted once the installation has been completed mechanically and electrically and connected up. Paragraph 7.2.3 describes the procedure for this.

Transport:
If internal transport of the system is necessary, make sure that:

- the UV-lamps have been removed and that they are stored in their original packaging;
- the system has been completely disconnected from the electricity mains;
- the system is clean and dry;
- all the components are suitably protected against external contaminants and damage.

Taking the system out of use temporarily:
If the system is taken out of use temporarily, it is important to flush the system with clean water so that no sand, salts or other corrosive materials remain behind in the system. Leave the system in a dry state.
When the medium is stationary, dissolved minerals can even corrode high-grade stainless steel.

4 System description

The diagram below illustrates the main aspects of the construction of the StreamLine UV-system. The diagram shows all possible applicable options. The actual situation can vary from the diagram depending on the application and the size of the system.

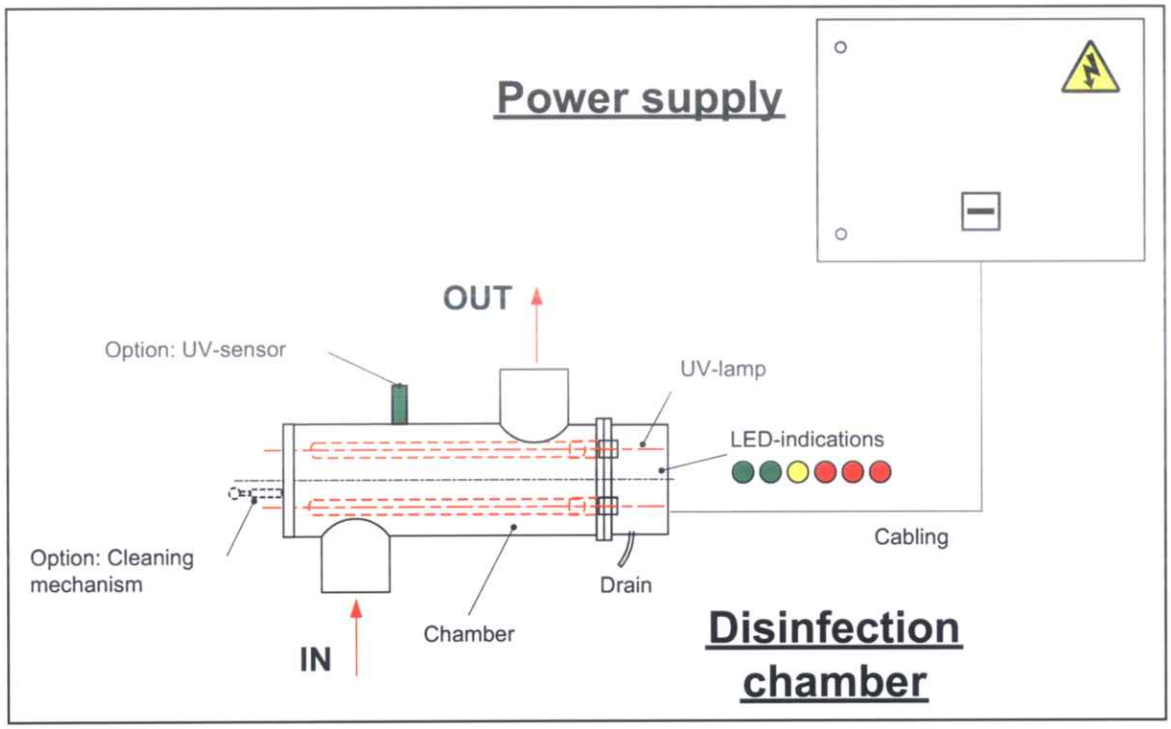

For detailed information, please see paragraph 4.1 (Disinfection chamber) and paragraph 4.2 (Control panel). Section 4.3 describes the power supply unit and section 4.4 outlines what options are possible.
A number of tools are also available for manually testing the lamps and placing the quartz sleeves. These are described in paragraph 4.5.

4.1 Disinfection chamber

The disinfection chamber consists of the following components:

Chamber:
The chamber is the main component of the StreamLine UV-system. On all models, the incoming and outgoing connections for the liquid are on either side of the chamber.
Two end plates are fitted to the on-end sides of the chamber and these are used for attachment of the lamps, the starters and any cleaning mechanism which is present. The components which are fitted are covered with a hood, in which the LED-indicators and also the cable glands are incorporated.
As standard, there are also provisions in the chamber for a UV-sensor (optional), for venting and draining the system (optional) and for removing liquid from the control compartment.

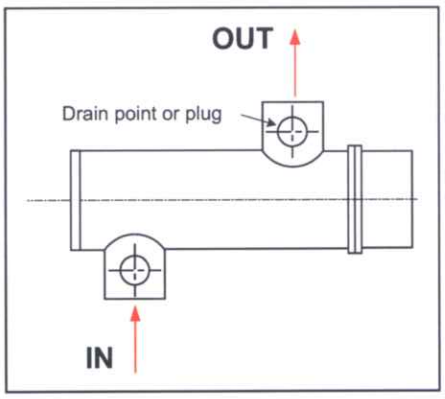

The size and the design of the chamber depend on the required disinfection capacity and the nature of the liquid.

UV-lamps:
The number and type of UV-lamps built into the system depend on the system size and the nature of the liquid that has to be disinfected.
The lamps are placed in quartz sleeves and therefore do not come into direct contact with the liquid. They can be fitted from either flanges. This has to be done according to a strict procedure. See paragraph 7.2.3 for further instructions.

Attention!	To avoid damaging the UV-lamps, never touch them with your bare hands!

Warning!	Remember that a lamp that has just been switched off will be extremely hot!

Warning!	The UV-lamps contain a small amount of mercury. See paragraph 2.3 for what to do with broken lamps!

After switching the lamps on, it can take 1 to 5 minutes before the full UV intensity is reached.
The life span of the lamps will be drastically reduced if they are repeatedly switched on and off. This results in decreasing UV intensity. Any contaminants on the quartz sleeves also lead to reduced UV output.

In addition to the components described here, other options are also possible:
- UV-sensor, for monitoring the UV-intensity. See section 4.4.1.
- Cleaning system for the quartz sleeves. See section 4.4.2.
- Relay for solenoid valve for draining off or supplying liquid, see section 4.4.3 (only in combination with UV sensor).

4.2 Control panel

The StreamLine UV-system is fitted as standard with a control panel which is built into the control compartment of the disinfection chamber. The system can be fitted with one of the following indicator panels:

4.2.1 F-series, system size 2,000 – 10,000, without UV-sensor

This series is always fitted with a single lamp. The type of lamp is dependent on the size of the system.

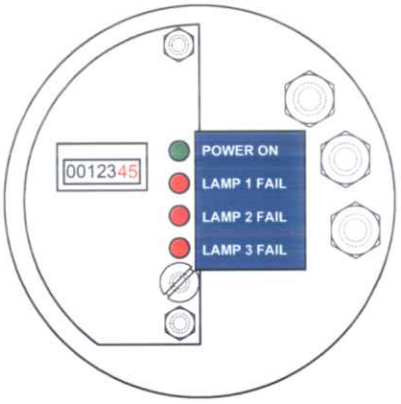

● **Power on**: The LED illuminates when the supply voltage is switched on.
● **Lamp 1 fail**: The LED illuminates when the lamp is defective.
Attention! The liquid is now no longer disinfected!
● **Lamp 2 fail**: Not in use.
● **Lamp 3 fail**: Not in use.

The hour-counter shows the number of hours of use.

4.2.2 F-series, system size 2.000 – 10.000, with UV-sensor

This series is always fitted with a single lamp. The type of lamp is dependent on the size of the system.
The UV-sensor measures the UV-intensity. The indications on the panel are set to the transmission value of the liquid to be disinfected when the lamp was new.

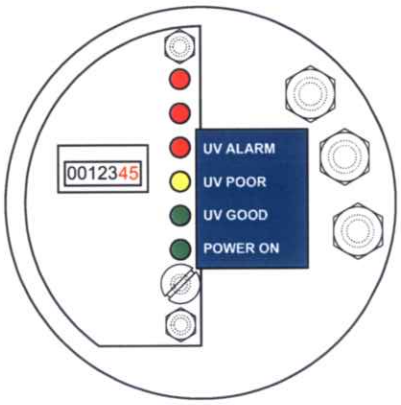

● **Power on**: The LED illuminates when the supply voltage is switched on.
● **UV Good**: There is sufficient UV-intensity to disinfect the liquid.
● **UV Poor**: The UV-intensity is becoming low, for example as a result of serious contamination or ageing of the lamp.
● **UV Alarm**: The UV-dose is too low.
Attention! In this case the liquid is no longer adequately disinfected!
The 2 other red LED's are not in use.

The hour-counter shows the number of hours of use.

4.2.3 G-series, system size 24.000 – 100.000, without UV-sensor

This series is fitted with one to three lamps. The type of lamp is dependent on the size of the system.

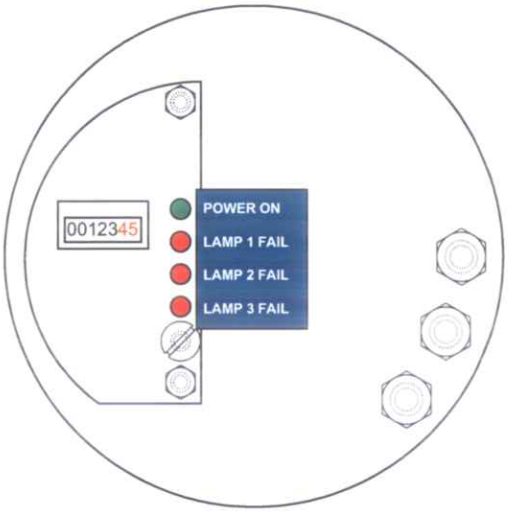

● **Power on**: The LED illuminates when the supply voltage is switched on.
● **Lamp 1 Fail**: Lamp-1 is defective and no longer emits UV radiation.
● **Lamp 2 Fail**: Lamp-2 is defective and no longer emits UV radiation.
● **Lamp 3 Fail**: Lamp-3 is defective and no longer emits UV radiation.
Attention! If one of the lamps is defective, the liquid is no longer adequately disinfected!

The hour-counter shows the number of hours of use.

4.2.4 G-series, system size 24.000 – 100.000, with UV-sensor

This series is fitted with one to three lamps. The type of lamp depends on the size of the system. The UV-sensor measures the UV-intensity. The indications on the panel are set to the transmission value of the liquid to be disinfected when the lamp was new.
An indication is also given in this system if a lamp is defective.

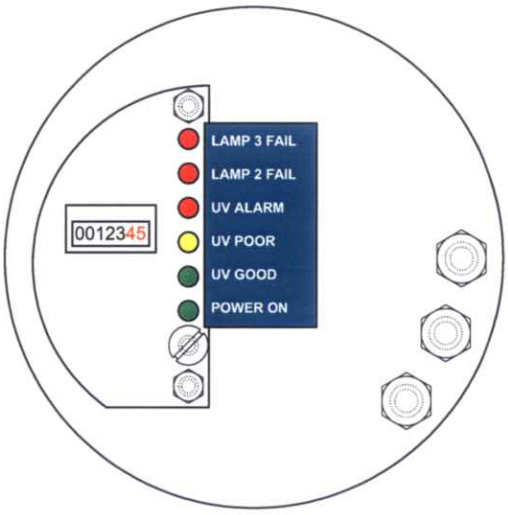

● **Power on**: The LED illuminates when the supply voltage is switched on.
● **UV Good**: There is sufficient UV-intensity to disinfect the liquid.
● **UV Poor**: The UV-intensity is becoming low, for example as a result of serious contamination or ageing of the lamp.
● **UV Alarm**: There is not enough UV dose (measurement is taken near to Lamp 1).

● **Lamp 2 Fail**: Lamp-2 is defective and no longer emits UV radiation.
● **Lamp 3 Fail**: Lamp-3 is defective and no longer emits UV radiation.

Attention! If one of the red LED's is on, then the liquid is not being sufficiently disinfected!

The hour-counter shows the number of hours of use.

4.3 Power supply

The power supply unit is fitted with the following components:

- Main switch, this switches the whole system on and off.
- Ballast units, for controlling the UV-lamps.
- In certain systems the starters are combined with the ballast units and are hence also incorporated in the power supply cabinet.
- Terminal strip for connecting the supply voltage and the disinfection chamber.

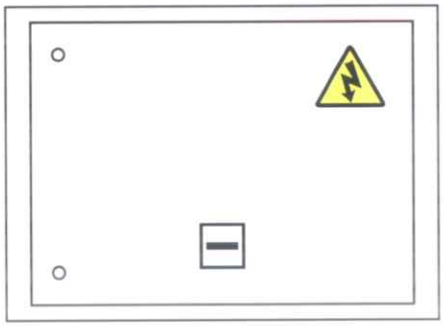

The power unit must be connected to 230 V – 50/60 Hz mains voltage, unless indicated otherwise. On this matter, see the circuit diagrams which have been supplied.

4.4 Options

It is possible that your system has a number of built in standard options. These are discussed in the following paragraphs.

4.4.1 UV-sensor:

As an option a UV-sensor can be fitted which measures the UV-intensity of the UV-lamp at a fixed place. The sensor passes the information to the control system so that it can be indicated (via the LED on the control panel) whether the lamp intensity is falling, whether the quarts sleeve is becoming contaminated or whether the quality of the liquid is changing. Depending on the design and the external connections available, an alarm signal can be generated when the UV-dose is too low.
The UV-sensor operates in the range from 240 – 300 nm.

4.4.2 Manual cleaning

Deposits of organic substances present in the liquid in the system can settle on the quartz sleeves that contain the UV-lamps. This deposit blocks the UV-radiation. Disinfection is no longer optimal and the control panel will indicate a lower UV-value (provided the system is fitted with a UV-sensor).
The manually operated cleaning mechanism can be used to remove these deposits without the system having to be switched off and the sleeves taken out.
Using a handgrip, a wiper plate can be moved back and forth along the quartz sleeves to wipe away the deposits. The photos opposite give an impression of the cleaning mechanism. The form of construction depends on the system size (shown here for a system with 1 lamp).

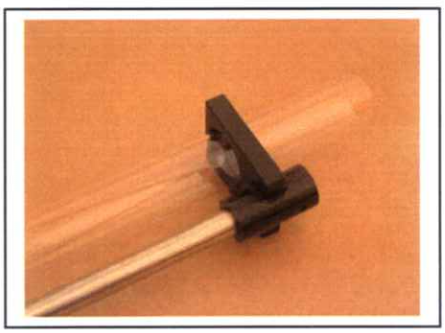

4.4.3 Relay for solenoid valve

A solenoid valve can be placed in the drain plug connector to enable the liquid in the chamber to be drained if the UV-dose is too low. The signal cable must be connected in accordance with the circuit diagrams onto the switched live contacts of the printed circuit board in the disinfection chamber.

4.5 Accessories

The following additional accessories are available:

Lamp tester:
The lamp tester gives a high-voltage pulse that can be used to test the working of the lamps. The tester works with a 9V-battery and generates a safe pulse of 3.000V / 1µA / 160KHz.

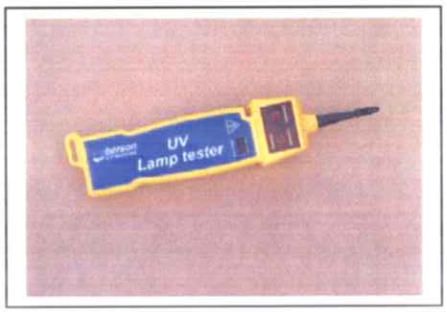

Jupito:
The Jupito is a mechanical aid for easily removing the quartz sleeves that reduces the risk of damage. The device can be extremely useful especially when the sleeves are stuck because of dirt and contaminants.

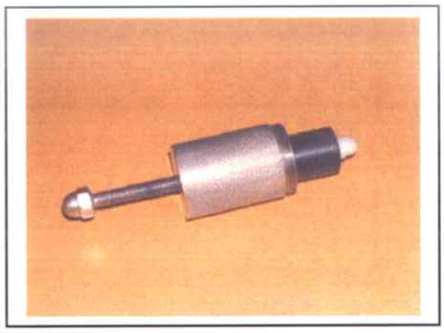

5 Installation and putting into operation

5.1 General

When installing the StreamLine UV-system, the following guidelines must be adhered to:

- The surroundings must be free of corrosive vapours, steam, excessive condensation, dripping liquids, explosive mixtures and gasses, salt air and large amounts of dust.
- Do not expose the cabinet to the outside air.
- The relative humidity must be lower than 95%.
- The ambient temperature must be between 5 and 40°C; the average temperature over a 24-hour period may not exceed 35°C.
- The system must not be subjected to heavy jolts or vibrations.
- Do not expose the system to magnetic or radioactive radiation.

5.2 Mechanical installation

When installing the chamber, the following points must be adhered to:

- The UV-lamps must always be placed horizontally.
- For service work, a free space must be left as indicated in the supplied drawings.
- Make sure the drain plug, the ventilation plug, the UV-sensor (if present) and the earth connection are sufficiently accessible.
- Make sure that the installation in which the UV-system will be integrated is resistant to UV-radiation – this also applies specifically to gaskets, valves and vents.
- Make sure that the UV-radiation can never escape into the outside air!
- Valves for taking samples must be placed approximately 1 metre before or respectively 0.5 metres behind the UV-system.
- Clean the external pipe work and the UV-system thoroughly before assembly.
- Position the UV-system with the help of the threaded pipe joints and appropriate packing in the pipe system. Make sure there is no mechanical stress!
- Check all connections to make sure they do not leak.
- Clean the whole system again after assembly.
- Install the lamps according to the instructions in paragraph 7.2.3.

5.3 Electrical installation

Attention! Installation work may only be carried out by qualified personnel!

Connect the power supply cabinet and the disinfection chamber in accordance with the circuit diagrams (supplied) and following local regulations. Take the following matters into account:

- When positioning the power supply cabinet, remember the standard cable length to the disinfection chamber is 2.5 metres. For special applications the cable length may be 10 metres. Consult Berson UV-techniek on this matter.
- All cables which are required are supplied with the system. When replacing cables, ensure that equivalent cable types are used.
- All cables must be earthed immediately on entering the cabinet, via the connection points designed for this.
- Ensure there is an adequate earth connection between the disinfection chamber and the power supply cabinet.

- If necessary, connect an external UV-alarm to the potential free contacts in the power supply cabinet.
- For systems with UV sensor (see section 4.2.2 and 4.2.4): Connect the solenoid valve (where fitted) onto the switched live contacts of the printed circuit board in the disinfection chamber. For this refer to the circuit diagrams supplied.
- Lead the cables through the housing cover in accordance with the diagram opposite.

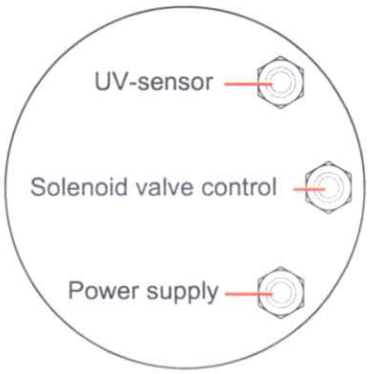

5.4 Putting into operation

After the mechanical and electrical installation work has been completed, the following precautionary measures should be taken:

- The pipework system with the UV-system must be completely filled with liquid and de-aerated.
- The flow-rate of the liquid medium must be sufficiently high to cool the system. A flow of at least 0.1 m3/hour is a typical value.
- Check whether the correct supply voltage is present on the connection contacts in the control cabinet.

ENSURE OF FLOW IN THE CHAMBER BEFORE ACTIVATING THE UNIT

Attention!	The system has been adjusted by Berson UV-techniek. This only has to be carried out again when new lamps are fitted. See the instructions in section 7.3 in this regard.

	Only switch the system on if the end closures are in position or if you are wearing safety glasses. If the end closures are not in position, a small quantity of UV-light can escape via the lamp holders. This can harm your eyes! Never look directly into a UV-lamp that has been switched on!

- Turn on the main switch and, if applicable, the lamp switch; allow the lamps to warm up for 1 to 5 minutes.
- Check the display to make sure all the lamps have been switched on.
- If the system is fitted with a UV-sensor, the control panel displays the UV-intensity (UV GOOD, UV POOR or UV ALARM).
  Consult section 7.2 if the UV-value is too low.

Attention!	After the lamps have been switched off, you must wait at least 15 minutes before switching them on again. Repeatedly switching the lamps on and off considerably shortens their life span!

Warning!	If the lamps are not fully heated up, there is no guarantee of an adequate UV-dose. The flow of liquid is however required for cooling the lamps!

6 Operation

The StreamLine UV-system is extremely easy to operate. The way in which it works is described below:

6.1 General

Make sure that the pipe work system is completely filled with liquid and that the flow rate is sufficiently high (at least 0,1 m^3 / hour).

- Turn the system on using the main switch. The lamps immediately start working and reach the correct output level after 1 to 5 minutes.
- Regularly check the status of the LEDs on the control panel.
- If necessary, turn the system off using the main switch.

6.2 Manual cleaning system (optional)

Manual cleaning can take place while the system is operating. The required cleaning frequency depends on the medium and the UV-intensity given on the display (provided the system is fitted with a UV-sensor).

- Remove the locking pin.

Warning!	By removing the locking pin, the handle of the wipe unit can be pressed forcefully to the outside by the pressure in the chamber!

- Pull the wiper system completely out with the handle or handgrip and then push it back in again. If necessary, repeat this action several times.
- Replace the locking pin.

7 Checks, maintenance, settings and repairs

7.1 Checks

A number of matters must be checked daily on the display. The summary below describes all eventualities. Whether or not certain LEDs are present depends on the design and size of your system:

- Check whether the supply voltage has been connected and whether the UV-system is in operation.
  If the LED is not illuminated:
  - Check whether the main switch is switched on, or
  - Check the fuses on the printed circuit board of the control panel (see 7.4.2).
  - If necessary, contact the Berson UV-techniek troubleshooting team.

Power on

- Systems without UV sensor: status of the lamps.

  If one of the **Lamp Fail** LED's on the control panel is on:
  - Replace defective lamps in accordance with the instructions in section 7.2.3.
  - If the lamp is not defective, replace the starter on the printed circuit board (see section 7.4.2).

Lamp 1 Fail
Lamp 2 Fail
Lamp 3 Fail

- Systems with UV sensor: status and quality of the lamps.

  If one of the **Lamp Fail** LED's on the control panel is on:
  - Replace the faulty lamp involved in accordance with the instructions in section 7.2.3.
  - If the lamp is not defective, replace the starter on the printed circuit board (see section 7.4.2).

  If the **UV Poor** LED is on (instead of **UV Good**):
  - Clean the quartz sleeves using the wiper (if present, see section 7.2.1), or
  - Clean the quartz tube by a chemical procedure, see section 7.2.2, or
  - Check the composition of the liquid, or
  - If necessary: replace all of the lamps due to ageing (see section 7.2.3).

  If the **UV Alarm** LED is on, whereas previously **UV Poor** had been showing briefly:
  - Replace (due to ageing) all of the lamps in accordance with the instructions in section 7.2.3.

  If the **UV Alarm** LED is on without **UV Poor** being on previously:
  - Replace (due to fault) Lamp 1 in accordance with the instructions in section 7.2.3, or
  - If the lamp is not defective, replace the starter on the printed circuit board (see section 7.4.2).
  - Check whether contamination of the liquid has suddenly become worse.

Lamp 3 Fail
Lamp 2 Fail
UV Alarm
UV Poor

Tip	Note all relevant changes, settings and other actions which have been carried out in the logbook which is supplied with the product-specification part of this documentation.

7.2 Maintenance

7.2.1 Cleaning the quartz sleeves with the wiper device (optional)

The quartz sleeves must be regularly cleaned. The regularity of this cleaning depends on the medium and must be established on the basis of one's own practical experiences. On systems with an in-built cleaning device, cleaning can be carried out when the system is switched on by moving the lever back-and-forward. Remove the locking pin prior to this.
If no cleaning device is present, one of the other methods described in sections 7.2.2 and 7.2.3 must be used.

7.2.2 Chemical cleaning of the quartz sleeves

If there is stubborn dirt on the quartz sleeves, chemicals can be added to the medium so that the dirt dissolves.

- Turn off the liquid flow and the main switch of the UV-system.
- Place appropriate chemicals in the disinfection chamber via an external connection.
- Drain the liquid off via the drain plug or the (optional) solenoid valve after approximately 10 minutes. Remember to remove the ventilation plug before draining.
- Rinse the disinfection chamber with the normal liquid medium used in the system, and drain once again via the drain hole.
- Replace the drain and ventilation plug.

7.2.3 Replacing lamps, quartz sleeves and wipe-rings

This procedure describes the actions which have to be carried out to replace lamps and to clean or replace quartz sleeves and wipe-rings. The procedure applies to systems with a single UV-lamp. In some cases it will not be necessary to replace all the components mentioned here; that depends on the nature of the medium and the number of operating hours. In that case, part of the procedure can be skipped.
The instructions below are based on a system with a single lamp, but they also apply for systems with several lamps.

Warning!

- Turn the main switch off!
- Turn off the flow and drain the liquid.
- Remember that the lamps can be hot!

Attention!

- Wear clean cotton gloves to avoid damaging the lamps.

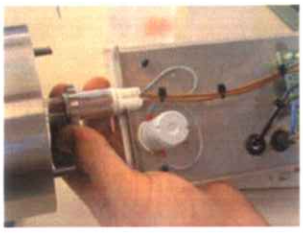

1. Unscrew the two cap nuts which attach the control-display to the disinfection chamber. Carefully slide the printed circuit board out.

2. Disconnect the connector from the UV-lamp. Put the printed circuit board down next to the disinfection chamber. Remove the lamp from the quartz sleeve, if possible also the spring.

3. Using the spanner supplied, unscrew the M-44 threaded bushes. Do this on both sides of the system.

4. Position the black mandrel in the end of the quartz sleeve. Using a hammer, carefully tap the sleeve out of the sealing rings.

5. Clean the sleeve with alcohol. Do not touch the sleeve with your hands.

6. If necessary replace the wipe-ring by first disassembling the plug or UV-sensor.

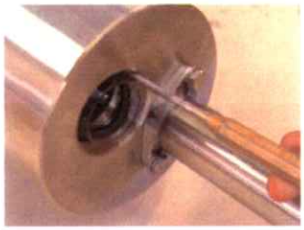

7. The new wipe-ring can be fitted through the opening in the wipe-clamp.
Slide the wipe-lever to the end of the chamber and position the wipe-ring in its position.
Re-fit the plug or the UV-sensor.

8. Put the sleeve without the sealing rings back in the chamber. Do this from the side which does not have the wipe-lever.

9. Wet the black O-rings with clean water and slide these over the quartz sleeve on both sides. Press these firmly into position using a suitable implement. Keep the sleeve symmetrically between the two ends.

10. Position the two white back-up rings and assemble the threaded bushes. Tighten the bushes with the flat key.
Now check the system has no leaks.

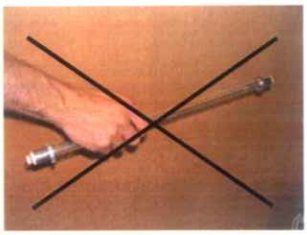

11. Do not touch the lamp with bare hands!

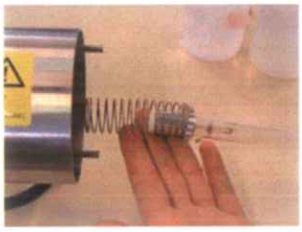

12. Position the pressure spring and lamp in the quartz sleeve. Do not touch the lamp with your hands!

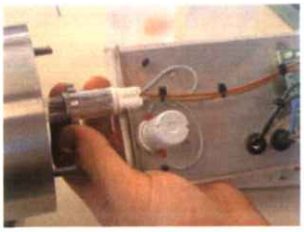

13. Connect the connector to the end of the lamp. Note that the connector can only be slid over the pins in two ways.

14. Assemble the cap nuts. Do not forget to fit the plastic rings.

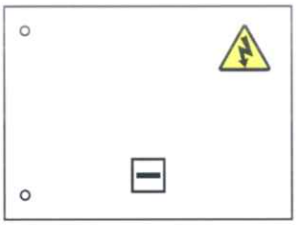

15. Put the system into operation again according to the procedure as described in section 5.4.

Attention!	If the lamps have been replaced, the UV measured value must be reset. To do this, follow the instructions in section 7.3.

Tip	When replacing wipe-rings in systems with 2 or 3 lamps, the whole wiper unit must be removed from the disinfection chamber. If necessary contact Berson UV-techniek service.

7.2.4 UV-sensor and quartz probe

If the system does not have an (optional) built-in cleaning mechanism, the quartz sleeve window will have to be cleaned chemically as described in paragraph 7.2.2, or by using the following manual method:

Warning!	➡ Turn of the main switch! ➡ Turn of the flow and drain the liquid in the disinfection chamber.

- Loosen the connector on top of the sensor.
- Unscrew the sensor housing using a socket key.
- Clean the head face of the quartz probe with alcohol.
- If the other faces of the quartz probe are dirty, remove the locking nut using a socket key (15 mm).
- Remove the quartz pin and clean it with alcohol. Also clean the sealing rings.
- Assemble the parts in the reverse order. The adjacent photo shows the parts in the correct sequence.
  Fit new sealing rings if necessary.
- Switch the system on again.

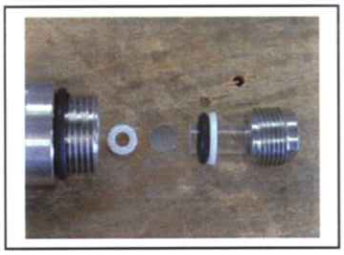

Attention!	In the point of the sensor, there is an adjusting screw for setting the correct distance from the UV-lamp. This screw is set in the correct position in the factory and may not be tightened or loosened!

7.3 Adjusting the UV measured value

If your system has a UV-sensor, the measured value must be reset immediately after new lamps are fitted.

Attention!	The sensor setting is only relevant for the indication on the control-display and does not affect the emitted UV-intensity!

Warning!	Remember that the supply voltage is switched on!

- Switch on the system and allow the lamps to stabilise for at least 2 hours. Ensure there is an adequate flow of liquid.

Tip	After normal heating up of the lamp (1 to 5 minutes) there is adequate UV-intensity for the normal disinfection process.

- Remove the seal-stop on the control-display; see the diagrams on the next page.
- Rotate the potentiometer clockwise until the LEDs **UV GOOD** (green) and **UV ALARM** (red) illuminate.

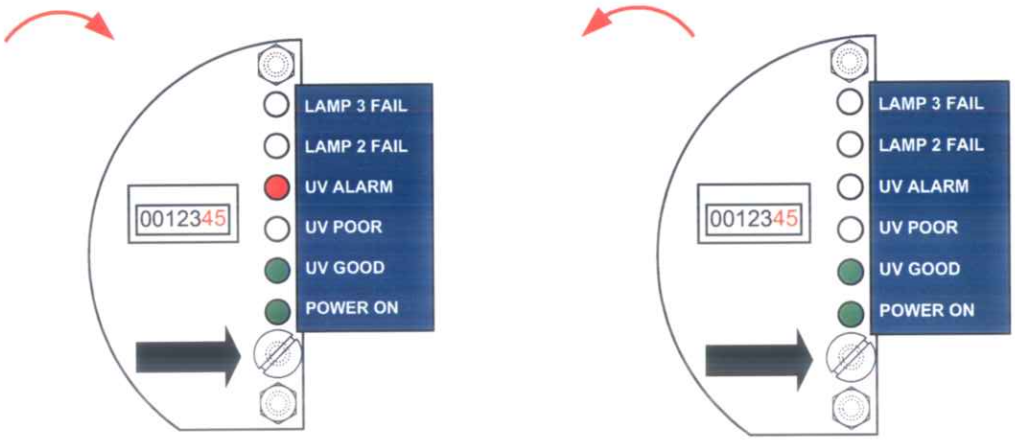

- Now turn the potentiometer anticlockwise until only the LED **UV GOOD** illuminates.
- Position the seal-stop.
- The system is now calibrated.

7.4 Repairs

7.4.1 Explanation of the circuit diagrams

The circuit diagrams consist of several sheets with columns that are numbered as follows:
Sheet 1: columns 0 – 19,
Sheet 2: columns 20 – 39 etc.

The components are numbered with an alphanumeric character followed by the column number.

Applied component characters:

F	Fuse
H	Hour-counter
K	Relay
S	Switch
VSA	Ballast unit
V	LED, Diode, Transistor
X	Connection, cable sleeve

For relays, the diagrams contain tables listing the relay contacts. The number indicates the column in which the contact is used (NC = normally closed and NO = normally opened).

Colour coding for the wiring:

Black	Connection voltage (phase)
Blue	(Low voltage) direct current or zero voltage
Red	(Low voltage) alternating current
Green-yellow	Earth
White	Potential-free

External connection of the control cabinet:

Use	Explanation
UV alarm	When the alarm is activated, the potential free two-way contact is switched over.

External connection onto the printed circuit board in the disinfection chamber:

Use	Explanation
Solenoid valve	The solenoid valve must be suitable for a voltage connection of 230 V – 50/60 Hz. Only present in systems with UV sensor.

7.4.2 Other malfunctions

- The UV-Alarm is active but the lamps and quartz sleeves are fine:
  - ➡ Check the liquid.
- The UV-lamps are fine but do not switch on:
  - ➡ Replace the starters behind the control panel. If the starter is combined with the ballast unit (meaning the whole is housed in the power supply cabinet) then this must be replaced as a whole.
- The LEDs on the control panel do not illuminate:
  - ➡ Check that there is supply voltage and that it is switched on.
  - ➡ Check the fuses on the printed circuit board. The fuses protect the electronic control of the lamps, but not the lamps themselves. Follow the instructions in section 7.2.3 for disassembling the printed circuit board. The photos below show the position of the fuses for systems without UV sensor or with UV sensor respectively.
    If the fuse burns out immediately, contact Berson UV-techniek service.

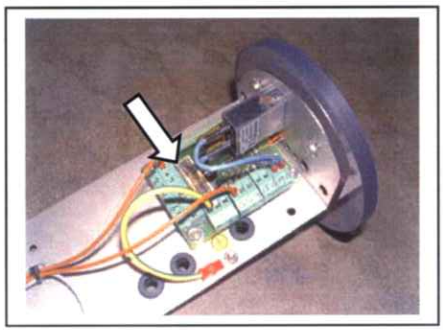

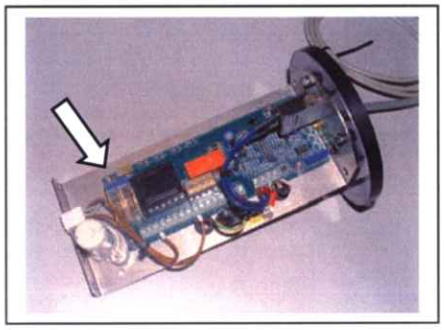

If there are any other problems, contact the service department of Berson UV-techniek.

8 Spare parts

See the annex, for a list of spare parts.

9 Disposal

9.1 General

If the UV-system is no longer used and has to be disassembled, the following steps should be carried out:

- Ensure that the liquid flow has been shut down and that the entire pipework system is empty.
- Ensure that the control cabinet and operating console have been disconnected.
- Remove the electricity mains connections (plugs) and remove the plugs from the cables.
- Disassemble the disinfection chamber, remove the UV-lamps carefully according to the instructions of paragraph 7.2.3.
- Dispose of the lamps according to local regulations or send them back to Berson UV-techniek.
- Disassemble the system further working from top to bottom. Use appropriate tools for this and observe safety procedures!
- The disinfection chamber and the control cabinet must be disposed of in accordance with local regulations; preferably by sending them to a company that can recycle the materials.

Attention:
These points only apply to parts supplied by Berson UV-techniek and described as such in this manual.

9.2 Returning old lamps

Used lamps can be returned to Berson UV-techniek. To do this, ask for the required "RMA number" beforehand.

Streamline 2000		EVERY YEAR		EVERY THIRD YEAR		SECURITY STOCK	
Part N°	Partname	no wiper	hand wiper	no wiper	hand wiper	no wiper	hand wiper
1.45.022	Ballast 20 Watt / 50Hz					1	1
0.45.432	Power Starter	1	1	1	1	1	1
2.43.175	UV-lamp Berson 20VI	1	1	1	1	1	1
2.55.014	Quartz sleeve 455mm F200			1	1	1	1
2.55.314	Quartz sleeve 455mm F220			1	1	1	1
2.56.299	Seal 15*25*8		1		1		
2.56.105	O-ring 20*3	1		1			
2.58.020	O-ring 20*3,5			1	1		
2.56.124	O-ring 32*5			2	2		
2.58.090	Cleaning wiper		1		1		

Streamline 3500		EVERY YEAR		EVERY THIRD YEAR		SECURITY STOCK	
Part N°	Partname	no wiper	hand wiper	no wiper	hand wiper	no wiper	hand wiper
1.45.024	Ballast 40 Watt / 50Hz					1	1
0.45.432	Power Starter	1	1	1	1	1	1
2.43.178	UV-lamp Berson 40VIK	1	1	1	1	1	1
2.55.014	Quartz sleeve 455mm F200			1	1	1	1
2.55.314	Quartz sleeve 455mm F220			1	1	1	1
2.56.299	Seal 15*25*8		1		1		
2.56.105	O-ring 20*3			1			
2.58.020	O-ring 20*3,5			1	1		
2.56.124	O-ring 32*5			2	2		
2.58.090	Cleaning wiper		1		1		

Streamline 5000		EVERY YEAR		EVERY THIRD YEAR		SECURITY STOCK	
Part N°	Partname	no wiper	hand wiper	no wiper	hand wiper	no wiper	hand wiper
0.45.025	Ballast 42 Watt / 50Hz					1	1
0.45.432	Power Starter	1	1	1	1	1	1
2.43.180	UV-lamp Berson 42VI	1	1	1	1	1	1
2.55.028	Quartz sleeve 867mm F200			1	1	1	1
2.55.328	Quartz sleeve 867mm F220			1	1	1	1
2.56.299	Seal 15*25*8		1		1		
2.56.105	O-ring 20*3			1			
2.58.020	O-ring 20*3,5			1			
2.56.124	O-ring 32*5			2	2		
2.58.090	Cleaning wiper		1		1		

Streamline 10.000		EVERY YEAR		EVERY THIRD YEAR		SECURITY STOCK	
Part N°	Partname	no wiper	hand wiper	no wiper	hand wiper	no wiper	hand wiper
1.45.028	Ballast 80 Watt / 50Hz					1	1
0.45.432	Power Starter	1	1	1	1	1	1
2.43.179	UV-lamp Berson 80VIK	1	1	1	1	1	1
2.55.028	Quartz sleeve 867mm F200			1	1	1	1
2.55.328	Quartz sleeve 867mm F220			1	1	1	1
2.56.299	Seal 15*25*8		1		1		
2.56.105	O-ring 20*3	1		1			
2.58.020	O-ring 20*3,5			1	1		
2.56.124	O-ring 32*5			2	2		
2.58.090	Cleaning wiper		1		1		

Streamline 24.000		EVERY YEAR		EVERY THIRD YEAR		SECURITY STOCK	
Part N°	Partname	no wiper	hand wiper	no wiper	hand wiper	no wiper	hand wiper
1.45.028	Ballast 80 Watt / 50Hz					1	1
0.45.432	Power Starter	1	1	1	1	1	1
2.43.179	UV-lamp Berson 80VIK	1	1	1	1	1	1
2.55.028	Quartz sleeve 867mm F200			1	1	1	1
2.55.328	Quartz sleeve 867mm F220			1	1	1	1
2.56.299	Seal 15*25*8		1		1		
2.56.105	O-ring 20*3	1		1			
2.58.020	O-ring 20*3,5			1	1		
2.56.124	O-ring 32*5			2	2		
2.58.090	Cleaning wiper		1		1		

Streamline 40.000		EVERY YEAR		EVERY THIRD YEAR		SECURITY STOCK	
Part N°	Partname	no wiper	hand wiper	no wiper	hand wiper	no wiper	hand wiper
1.45.028	Ballast 80 Watt / 50Hz					1	1
0.45.432	Power Starter	2	2	2	2	1	1
2.43.179	UV-lamp Berson 80VIK	2	2	2	2	1	1
2.55.028	Quartz sleeve 867mm F200			2	2	1	1
2.55.328	Quartz sleeve 867mm F220			2	2	1	1
2.56.299	Seal 15*25*8		1		1		
2.56.105	O-ring 20*3	1		1			
2.58.020	O-ring 20*3,5			1	1		
2.56.124	O-ring 32*5			4	4		
2.58.090	Cleaning wiper		2		2		

Streamline 60.000		EVERY YEAR		EVERY THIRD YEAR		SECURITY STOCK	
Part N°	Partname	no wiper	hand wiper	no wiper	hand wiper	no wiper	hand wiper
1.45.028	Ballast 80 Watt / 50Hz					1	1
0.45.432	Power Starter	3	3	3	3	1	1
2.43.179	UV-lamp Berson 80VIK	3	3	3	3	1	1
2.55.028	Quartz sleeve 867mm F200			3	3	1	1
2.55.328	Quartz sleeve 867mm F220			3	3	1	1
2.56.299	Seal 15*25*8		1		1		
2.56.105	O-ring 20*3	1		1			
2.58.020	O-ring 20*3,5			1	1		
2.56.124	O-ring 32*5			6	6		
2.58.090	Cleaning wiper		1		1		

Streamline 80.000		EVERY YEAR		EVERY THIRD YEAR		SECURITY STOCK	
Part N°	Partname	no wiper	hand wiper	no wiper	hand wiper	no wiper	hand wiper
8.44.006	Electr. Ballast 200W					1	1
2.43.183	UV-lamp Berson 160VIK	2	2	2	2	1	1
2.55.028	Quartz sleeve 867mm F200			2	2	1	1
2.55.328	Quartz sleeve 867mm F220			2	2	1	1
2.56.299	Seal 15*25*8		1		1		
2.56.105	O-ring 20*3	1		1			
2.58.020	O-ring 20*3,5			1	1		
2.56.124	O-ring 32*5			4	4		
2.58.090	Cleaning wiper		1		1		

Streamline 100.000		EVERY YEAR		EVERY THIRD YEAR		SECURITY STOCK	
Part N°	Partname	no wiper	hand wiper	no wiper	hand wiper	no wiper	hand wiper
8.44.006	Electr. Ballast 200W					1	1
2.43.183	UV-lamp Berson 160VIK	3	3	3	3	1	1
2.55.028	Quartz sleeve 867mm F200	3	3	3	3		
2.55.328	Quartz sleeve 867mm F220	3	3	3	3		
2.56.299	Seal 15*25*8		1		1		
2.56.105	O-ring 20*3	1		1			
2.58.020	O-ring 20*3,5			1	1		
2.56.124	O-ring 32*5			6	6		
2.58.090	Cleaning wiper		1		1		

Flow capacity [m3/h]

Transmission over 10 mm [%]	Model: 2000	Model: 3500	Model: 5000	Model: 10000	Model: 16000	Model: 24000	Model: 40000	Model: 60000	Model: 80000	Model: 100000
100	1,9	3,8	5,5	11,0	16,4	23,9	39,4	60,9	68,9	106,6
98	1,9	3,7	5,3	10,6	15,8	22,0	35,5	55,5	32,2	97,0
96	1,8	3,6	5,1	10,2	15,2	20,3	32,2	50,6	56,4	88,6
94	1,7	3,4	4,9	9,8	14,7	18,7	29,3	46,4	51,3	81,1
92	1,6	3,3	4,7	9,4	14,1	17,3	26,8	42,6	46,9	74,5
90	1,6	3,2	4,5	9,0	13,6	16,0	24,6	39,2	43,1	68,6
88	1,5	3,0	4,3	8,7	13,0	14,8	22,7	36,2	39,6	63,4
86	1,5	2,9	4,2	8,4	12,5	13,7	20,9	33,5	36,6	58,7
84	1,4	2,8	4,0	8,0	12,0	12,7	19,4	31,1	34,0	54,5
82	1,4	2,7	3,9	7,7	11,6	11,8	18,0	29,0	31,6	50,7
80	1,3	2,6	3,7	7,4	11,1	10,9	16,8	27,0	29,4	47,3

UV-dosage = 25mJ/cm2 at end of lamplife

Date	Time	Hour-counter	Description of handling	Action	Approved by

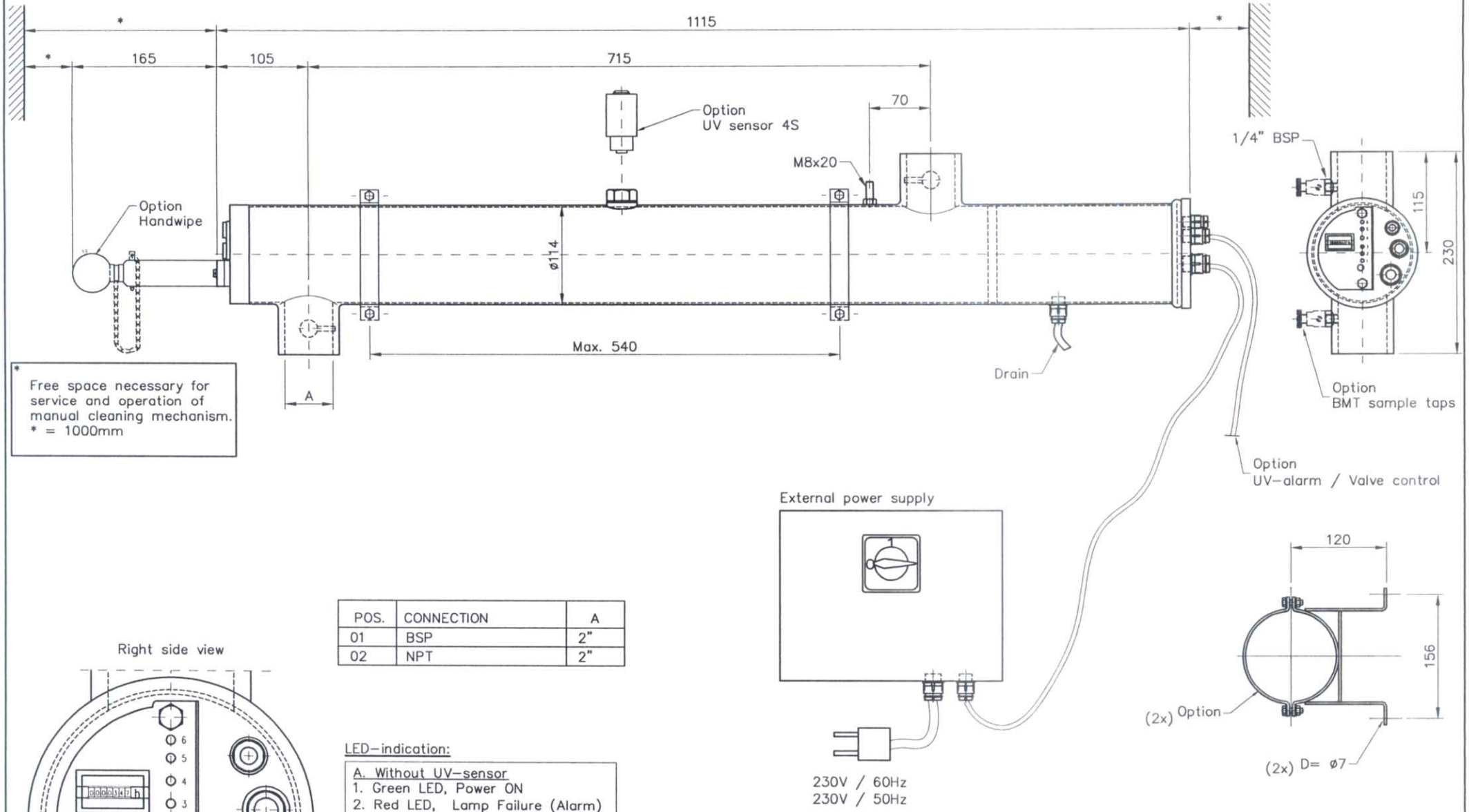

* Free space necessary for service and operation of manual cleaning mechanism.
* = 1000mm

POS.	CONNECTION	A
01	BSP	2"
02	NPT	2"

LED–indication:

A. Without UV–sensor
1. Green LED, Power ON
2. Red LED, Lamp Failure (Alarm)
3. Red LED,
4. Red LED,

B. With UV–sensor
1. Green LED, Power ON
2. Green LED, UV good
3. Yellow LED, UV poor
4. Red LED, UV alarm
5. Red LED, Lamp 2 Fail
6. Red LED, Lamp 3 Fail

NOTE.
Finishing;
Inside..... 0.8
Outside brushed..K280

TOLERANCE
According to:
All Dimensions ±1
unless otherwise mentioned

berson UV-techniek
De Haarkes 23
5674 TL Nuenen
Tel.: +31 40 2907777, Fax.: +31 40 2835755
Internet. www.bersonuv.com

Description:
LAYOUT FS(W)1

(StreamLine/Maritime 5000-16000)

Remarks:
Stainless steel 316L
Connection DIN2986

Article no.
Project no.
Customer.

Ref. Draw.:
Appr.:
Drawn: TJB
Date: 08-08-2003

	Revision.	Name
06		
05		
04		
03		
02		

Scale 1:5 | Projection | Unit: MM | Sheet 1 of 1

DRAWING NO: 055-009 -01 | Size. A3

COPYRIGHT © 2002 BERSON MILIEUTECHNIEK B.V. NO PART OF THIS DRAWING MAY BE REPRODUCED, COPIED OR OTHERWISE MADE PUBLIC IN ANY FORM WHAT SO EVER WITHOUT WRITTEN PERMISSION. THIS DRAWING IS COMPANY CONFIDENTIAL

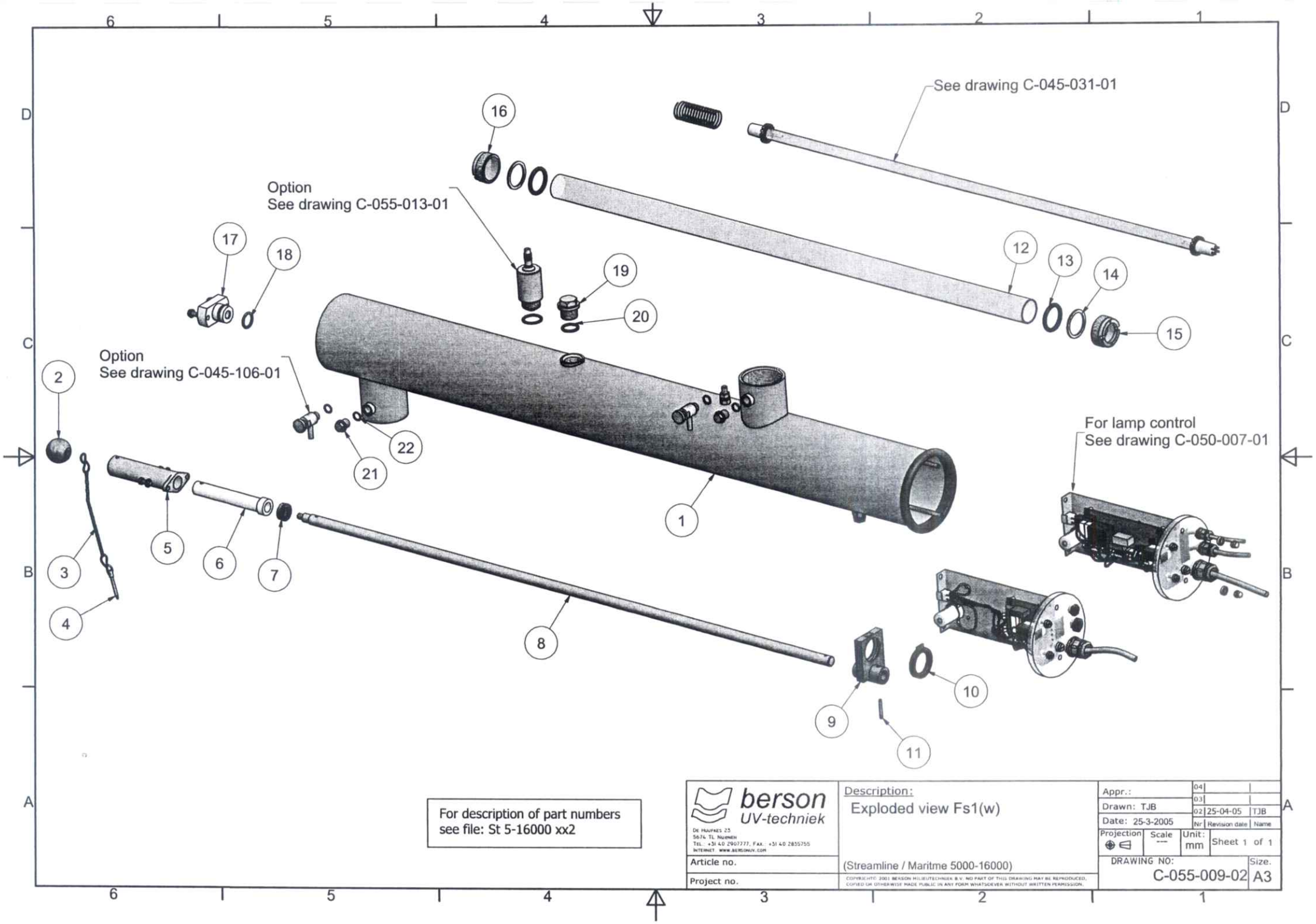

For description of part numbers see file: St 5-16000 xx2

berson UV-techniek
De Huefkes 23
5674 TL Nuenen
Tel.: +31 40 2907777, Fax.: +31 40 2835755
Internet: www.bersonuv.com

Article no.

Project no.

Description:
Exploded view Fs1(w)

(Streamline / Maritme 5000-16000)

COPYRIGHT© 2001 BERSON HUISEUTECHNIEK B.V. NO PART OF THIS DRAWING MAY BE REPRODUCED, COPIED OR OTHERWISE MADE PUBLIC IN ANY FORM WHATSOEVER WITHOUT WRITTEN PERMISSION.

Appr.:	04		
Drawn: TJB	03		
	02	25-04-05	TJB
Date: 25-3-2005	Nr	Revision date	Name
Projection	Scale ---	Unit: mm	Sheet 1 of 1
DRAWING NO: C-055-009-02			Size. A3

Part list; Streamline / Maritime 5-16000 FS1(W)

DRAWING NUMBER; C-055-009-02 (sheet 1)

Number	Part Description	Article number
1	Chamber FS1(W)	----------
2-11	Wiper parts (FS1W)	----------
12	Quartz sleeve F200	2.55.028
13	O-ring (32*5)	2.56.124
14	Teflon ring	2.56.260
15	M44 bushing	2.55.005
16	M44 bushing blind	2.55.006
17	Teflon sealing (only used by FS1)	2.17.381
18	O-ring (20*3) (only used by FS1)	2.56.105
19	Plug 3/4" BSP	2.05.035
20	O-ring (20*3)	2.56.105
21	Plug 1/4" BSP	2.05.033
22	O-ring (10*2)	2.58.010

Part list; Wiper parts FS1W

DRAWING NUMBER; C-055-009-02 (sheet 1)

Number	Part Description	Article number
2	Wiperknob	2.21.051
3	Chain	2.11.377
4	Locking pin	2.11.380
5	wiper rod boss insert	2.16.378
6	Cleaning rod boss	2.16.378*2
7	Sealing 18*25*8	2.56.299
8	Wiper rod	2.12.375
9	Wiper yoke	2.16.411
10	Cleaning wiperring	2.58.090
11	Spring dowel	2.11.386

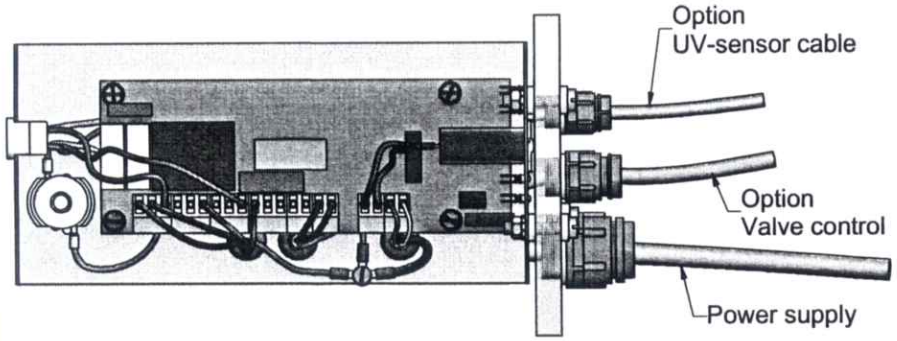

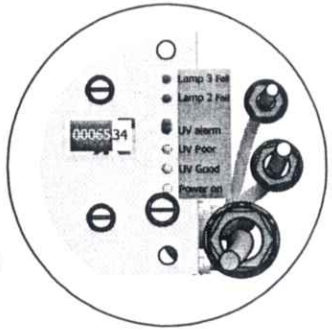

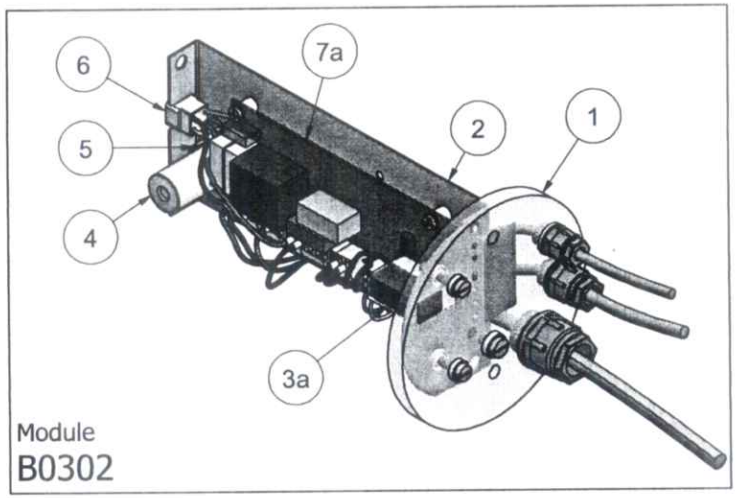

Complete module B0302 [with UV]
Lamp [20-80vik] ; part. no.=M6.40.015*4.01
Lamp [160vik] ; part. no.=M6.40.015*2.01

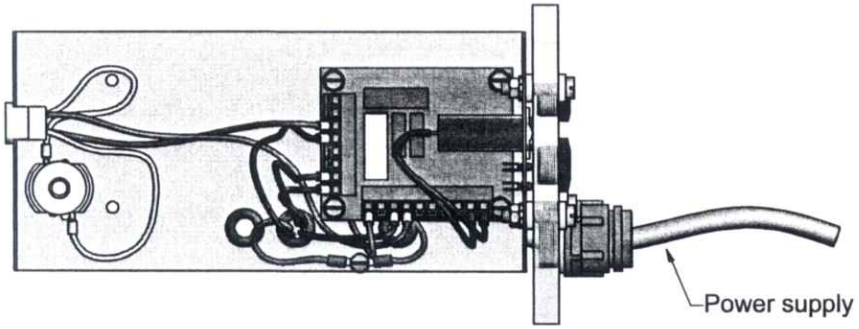

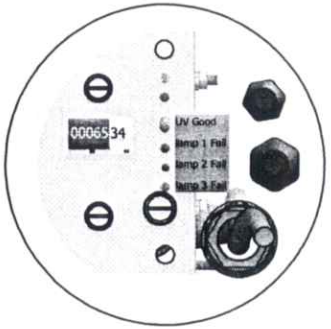

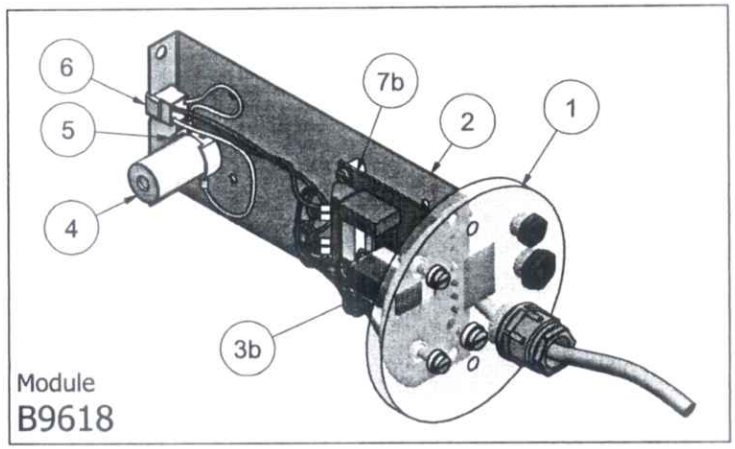

Complete module B9618 [no UV]
Lamp [20-80vik] ; part. no.=M6.40.013*1.01
Lamp [160vik] ; part. no.=M6.40.013*5

Pos.	Part decription	Article no.
1.	End cap	6.12.070.02
2.	Mounting plate	2.11.039.03
3a.	Hour counter 12 VDC	6.44.039.01
3b.	Hour counter 24 VDC	6.44.040
4.	Starter	0.45.432.01
5.	Starter holder	1.34.406
6.	Lamp connection	2.56.116
7a.	Print B0302	6.40.015.01
7b.	Print B9618	6.40.013.02

berson
UV-techniek
De Huvkes 23
5674 TL Nuenen
Tel.: +31 40 2907777, Fax.: +31 40 2855755
Internet: www.bersonuv.com

Article no.

Project no.

Description:
layout module B0302/9618
Lamp controle

COPYRIGHT© 2001 BERSON MILIEUTECHNIEK B.V. NO PART OF THIS DRAWING MAY BE REPRODUCED, COPIED OR OTHERWISE MADE PUBLIC IN ANY FORM WHATSOEVER WITHOUT WRITTEN PERMISSION.

Appr.:	04		
Drawn: TJB	03		
Date: 24-3-2005	02		
	Nr	Revision date	Name
Projection	Scale ---	Unit: mm	Sheet 1 of 1
DRAWING NO: C-050-007-01			Size. A3

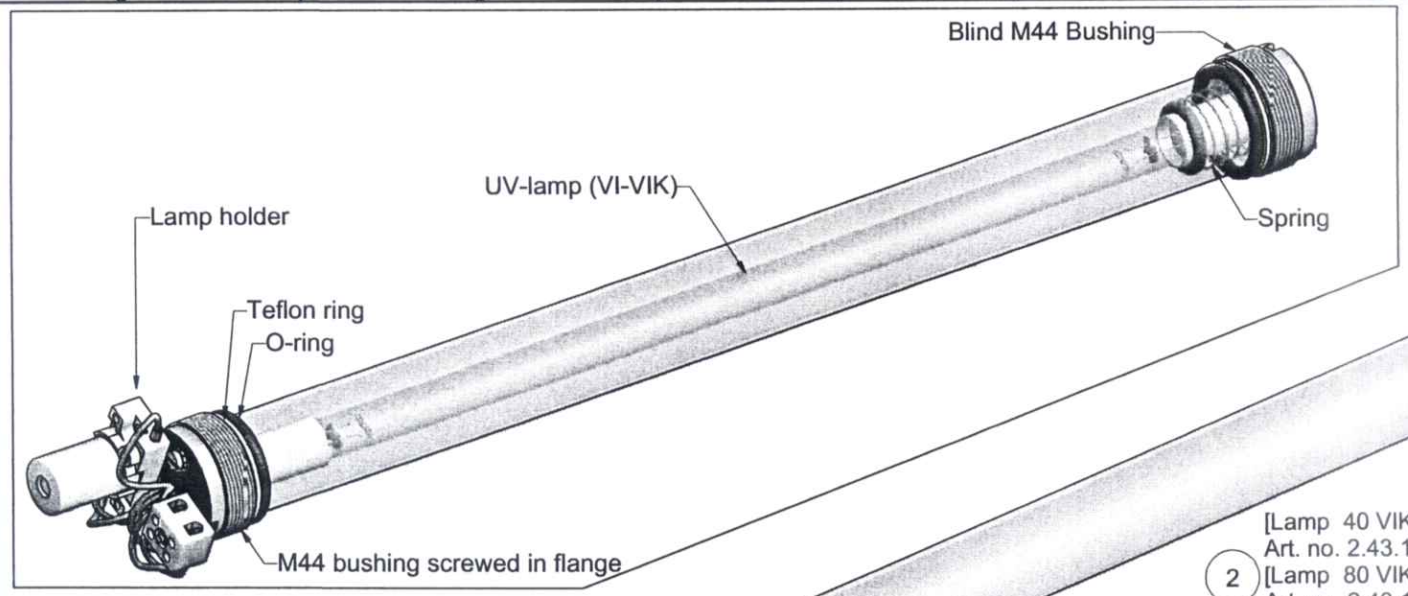

Chamber	Part number Quartz sleeve		
	Normal (F200)	Ozon (F220)	Synthetic (F180)
StreamLine			
2-3500	-2.55.014	------	------
5-16000	-2.55.028	------	-2.55.348
GS1-2-3	-2.55.028	------	-2.55.348
ProLine			
Fs1	-2.55.027	------	-2.55.347
Fsw1	-2.55.028	------	-2.55.348
GS1-2-3	-2.55.028	------	-2.55.348

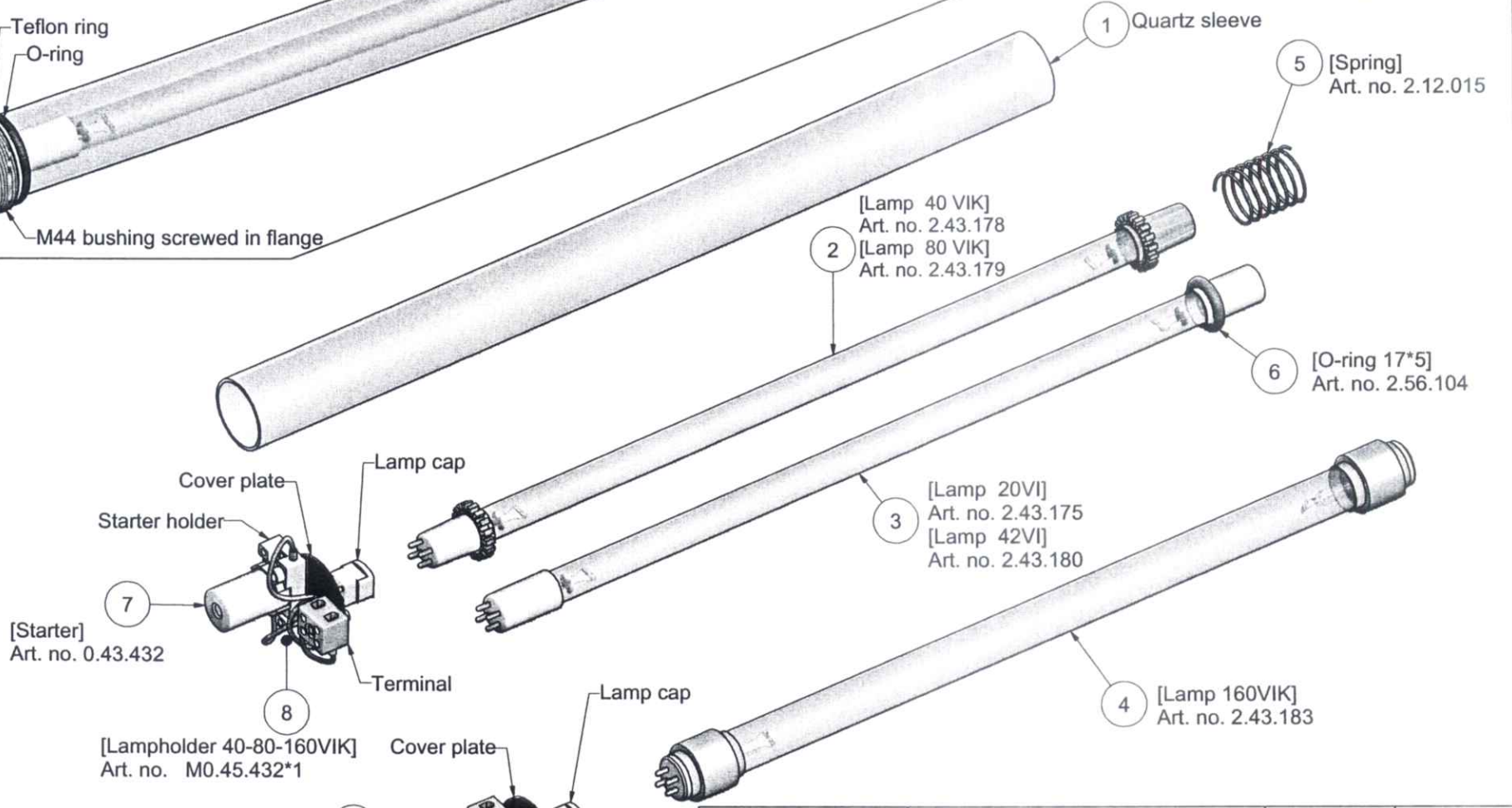

berson UV-techniek
De Huefkes 23
5674 TL Nuenen
Tel.: +31 40 2907777, Fax.: +31 40 2835755
Internet: www.bersonuv.com

Article no.

Project no.

Description:
Detail Lamp assembly (VI/VIK)

COPYRIGHT© 2001 BERSON MILIEUTECHNIEK B.V. NO PART OF THIS DRAWING MAY BE REPRODUCED, COPIED OR OTHERWISE MADE PUBLIC IN ANY FORM WHATSOEVER WITHOUT WRITTEN PERMISSION.

Appr.:
Drawn: TJB
Date: 27-11-2003

Nr	Revision date	Name
04		
03		
02		

Projection | Scale — | Unit: mm | Sheet 1 of 2

DRAWING NO: C-045-031-01

Size. A3

1 IP65 connector male with cable

Length	art.nr.;
2.5mtr	0.34.520*003
5 mtr	0.34.520*005
10 mtr	0.34.520*010

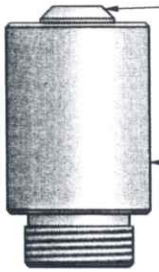

10 IP65 connector female

2 Sensor body 4S
Art. nr.: 6.12.061

11 O-ring
Art. nr.: 2.56.105

3 Adjustment nut
Art. nr.: 6.11.070

4 PTFE ring
Art. nr.: 2.19.011

6 O-ring
Art. nr.: 2.56.024

9 PTFE ring
Art. nr.: 2.19.010

7 Nut MF20
Art. nr.: 6.12.070

8 O-ring
Art. nr.: 2.58.010

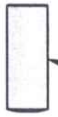

5 Quartz pin L=26x10
Art. nr.: 2.55.062

Section View

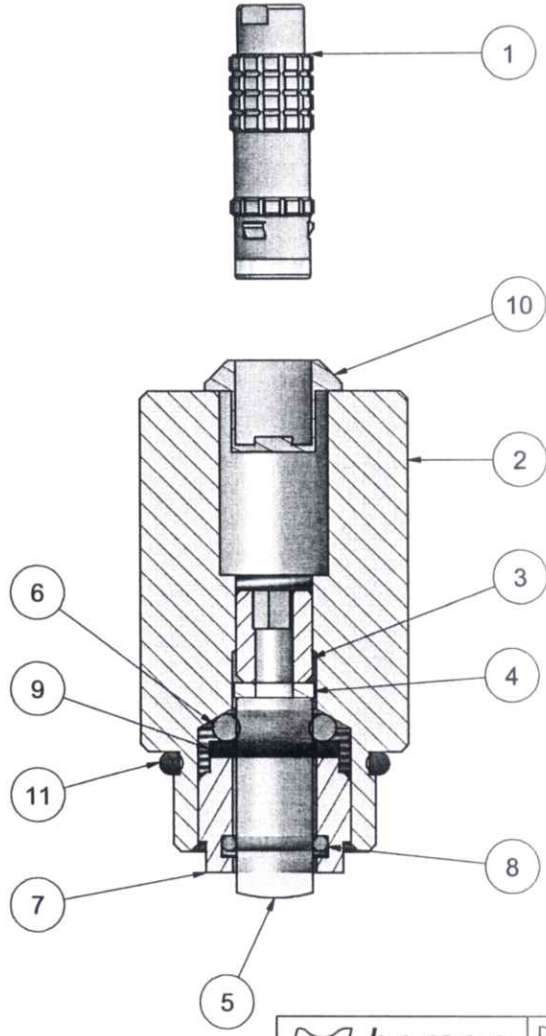

Sensor complete M6.12.061*1

berson UV-techniek
De Huefkes 23
5674 TL Nuenen
Tel.: +31 40 2907777, Fax.: +31 40 2855755
Internet: www.bersonuv.com

Article no.

Project no.

Description:
Exploded view UV-sensor 4S

COPYRIGHT © 2001 BERSON MILIEUTECHNIEK B.V. NO PART OF THIS DRAWING MAY BE REPRODUCED, COPIED OR OTHERWISE MADE PUBLIC IN ANY FORM WHATSOEVER WITHOUT WRITTEN PERMISSION.

Appr.:		04	
Drawn: TJB		03	
Date: 21-3-2003		02	
		Nr	Revision date / Name
Projection	Scale 1:1	Unit: mm	Sheet 1 of 2
DRAWING NO: C-055-013-01			Size. A3

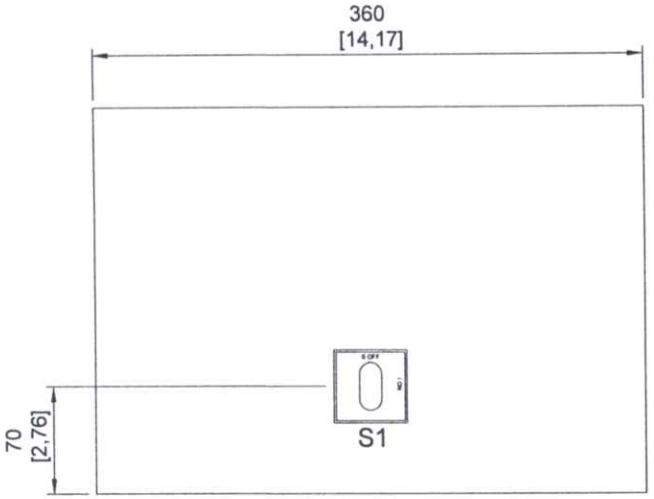

Front

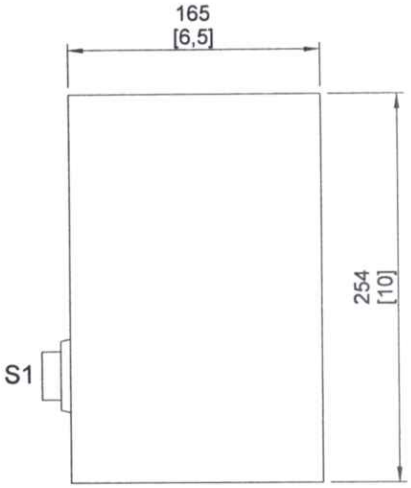

Side

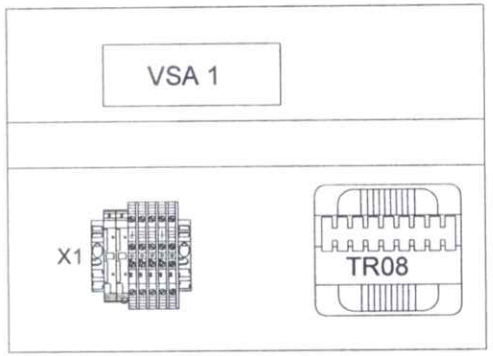

Mounting plate

berson UV-techniek De Haarsen 33 5674 TL Nuenen Tel.: +31 40 2907777, Fax.: +31 40 2836758 Internet: www.berson.uv.com	Description: StreamLine 10000 230V 1L+N 50Hz StreamLine power/control module	Ref. Tek.:			
		Appr.:			
		Drawn: Ruijs			
		Date: 03-03-2007	Revision.	Name	
Project no. R27/02	Customer. APPLIED UV CC	Scale	Projection	Unit: mm [inches]	Sheet 01 of 02
Order no. 36715-02		drawing no: SL2-24k-03			Size. A3

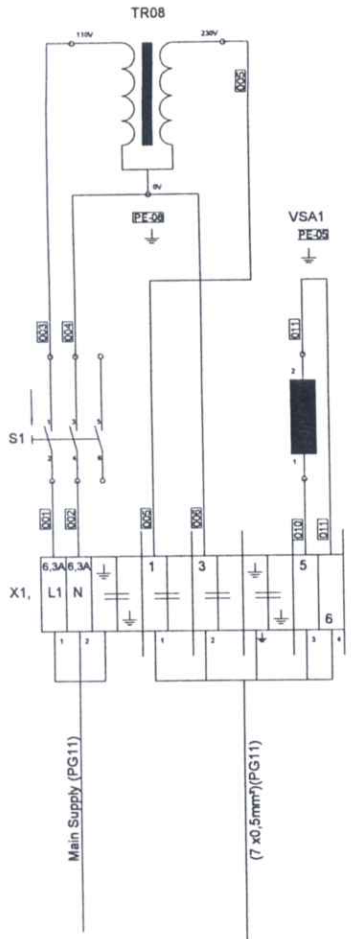

Wire	From	To	Size (mm²)	Colour
000				
001	X1,L1	S1 - 2	1	Black
002	X1,N	S1 - 4	1	Black
003	S1 - 1	TR9 - 110V	1	Black
004	S1 - 3	TR9 - 0V	1	Black
005	X1,1	TR9 - 230V	1	Black
006	X1,3	TR9 - 0V	1	Black
007				
008				
009				
010	X1,5	VSA1 - 1	1	Black
011	X1,6	VSA1 - 2	1	Black
012				
013				
014				
015				
016				
017				
018				
019				
020				
021				
022				
023				
024				
025				
026				
027				
028				
029				
030				
031				
032				
033				
034				
035				
036				
037				
038				
039				
040				
PE-01				
PE-02				
PE-03				
PE-04				
PE-05	X1,earth	VSA1 - earth	1,5	Green/Yellow

Wire	From	To	Size (mm²)	Colour
	Cabinet	Chamber	7 x 0,5mm²	
1	X1,1	PCB - 1	0,5	Black 1
2	X1,3	PCB - 2	0,5	Black 2
3	X1,5	PCB - 6	0,5	Black 3
4	X1,6	PCB - 10	0,5	Black 4
5			0,5	Black 5
6			0,5	Black 6
Earth	X1,earth	mounting plate	0,5	Green/Yellow
	PCB B0302	Terminal block	3 x 1mm²	
1	PCB - 15	block 1	1	Black 1
2	PCB - 16	block 2	1	Black 2
Earth	Mounting plate	block 3	1	Green/Yellow
	Only for 2000-3500-5000-10000			
	Quantity of leds activated depends on quantity of lamps			
	Led indication B0302			
	Led 1 (Green)	Power on		
	Led 2 (Green)	UV good		
	Led 3 (Yellow)	UV poor		
	Led 4 (Red)	UV alarm		
	Only for 24000			
	Quantity of leds activated depends on quantity of lamps			
	Led indication B0302			
	Led 1 (Green)	Power on		
	Led 2 (Green)	UV good		
	Led 3 (Yellow)	UV poor		
	Led 4 (Red)	UV alarm		
	Led 5 (Red)	Lamp 2		
	Led 6 (Red)	Lamp 3		

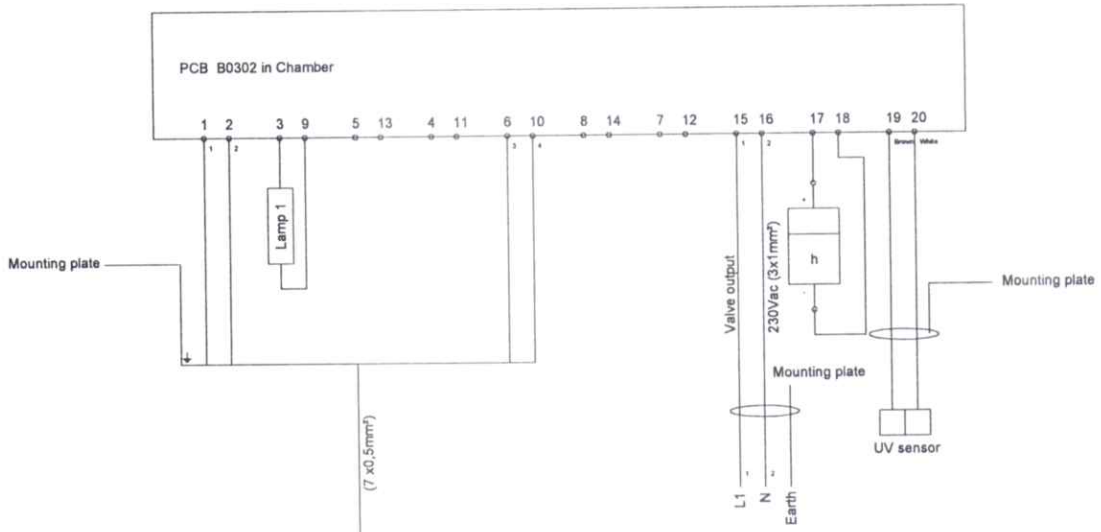

berson UV-techniek

Description:
StreamLine 10000
230V 1L+N 50Hz
StreamLine
power/control module

Ref. Tek.:
Appr.:
Drawn: Ruijs
Date: 03-03-2007
Revision. Name
Scale
Projection
Unit: mm (inches)
Sheet 02 of 02

Project no.
R27/02
Order no.
36715-02

Customer.
APPLIED UV CC

drawing no:
SL2-24k-03

Size
A3

APPENDIX 2 CAT Pumps – Booster Pump & Thermal Expansion Accumulator

2.1 Specification Sheet

2.2 Service Manual

2.3 Accumulator Specification Sheet

(Left blank intentionally)

15 Frame Plunger Pump

Standard Brass Model 1540E

SPECIFICATIONS

	U.S. Measure	Metric Measure
Flow	18.0 GPM	(68 L/M)
Pressure Range	100 to 1200 PSI	(7 to 85 BAR)
RPM	1100 RPM	(1100 RPM)
Inlet Pressure Range	Flooded to 70 PSI	(Flooded to 4.9 BAR)
Bore	1.181"	(30 mm)
Stroke	1.181"	(30 mm)
Crankcase Capacity	42 oz.	(1.26 L)
Maximum Liquid Temperature	140°F	(60°C)
Above 130°F call CAT PUMPS for inlet conditions and elastomer recommendations.		
Inlet Ports (2)	1" NPTF	(1" NPTF)
Discharge Ports (2)	3/4" NPTF	(3/4" NPTF)
Pulley Mounting	Either Side	(Either Side)
Shaft Diameter	1.181"	(30 mm)
Weight	42.6 lbs.	(21 kg)
Dimensions	14.57 x 13.0 x 7.20"	(370 x 330 x 183 mm)

FEATURES

Superior Design

- Triplex plunger design provides smoother liquid flow.
- Special Epoxy painted crankcase,bearing covers and rear cover with liquid gasket seal provides added moisture protection.
- Lo-Pressure and Hi-Pressure Seals are lubricated and cooled by the liquid being pumped.
- Inlet and discharge valve assemblies interchange for easier maintenance.
- Oil bath crankcase assures optimum lubrication.
- Close tolerance concentricity of the ceramic plunger maximizes seal life.

Quality Materials

- Precision design 304 stainless steel valves and seats are hardened and polished for ultimate seating and extended valve life.
- Forged Brass manifolds are strong and corrosion resistant.
- Special concentric, high-density, polished, solid ceramic plungers provide a true wear surface and extended seal life.
- Specially formulated, CAT PUMP exclusive, Hi-Pressure seals offer unmatched performance and seal life.
- Die cast aluminum crankcase provides high strength, minimum weight and precision tolerance control.
- Chrome-moly crankshaft gives unmatched strength and surface hardness.
- Oversized crankshaft bearings with greater loading capacity mean longer bearing life.

Easy Maintenance

- Wet-end is easily serviced without entering crankcase, requiring less time and effort.
- Preset packings mean no packing gland adjustment is necessary, reducing maintenance costs.

⚠ WARNING

All systems require both a primary pressure regulating device (i.e., regulator, unloader) and a secondary pressure safety relief device (i.e., pop-off valve, safety valve). Failure to install such relief devices could result in personal injury or damage to the pump or to system components. CAT PUMPS does not assume any liability or responsibility for the operation of a customer's high pressure system.

ELECTRIC HORSEPOWER REQUIREMENTS

FLOW		PRESSURE			RPM
		PSI 800	PSI 1000	PSI 1200	
U.S. GPM	L/M	BAR 55	BAR 70	BAR 85	
18	68	9.9	12.3	14.8	1100
15	57	8.2	10.3	12.3	917

DETERMINING THE PUMP R.P.M. $\frac{\text{Rated G.P.M.}}{\text{Rated R.P.M.}} = \frac{\text{"Desired" G.P.M.}}{\text{"Desired" R.P.M.}}$

DETERMINING THE REQUIRED H.P. $\frac{\text{GPM x PSI}}{1460} = \text{Electric Brake H. P. Required}$

DETERMINING MOTOR PULLEY SIZE $\frac{\text{Motor Pulley O.D.}}{\text{Pump R.P.M.}} = \frac{\text{Pump Pulley O.D.}}{\text{Motor R.P.M.}}$

See complete Drive Packages [Inclds: Pulleys, Belts, Hubs, Key] Tech Bulletin 003.
Refer to pump **Service Manual** for repair procedure, additional technical information and **pump warranty**.

"Customer confidence is our greatest asset"

PARTS LIST

ITEM	P/N	MATL	DESCRIPTION	QTY
2	*990036*	*STL*	*Key (M8x7x40) Use w/30059 and 990012*	*1*
—	*30067*	*STL*	*Key (M8x7.5x25) Use w/30059 "H" Hub*	*1*
5	92538	S	Screw, Sems HHC (M6x16)	8
8	49279	ALE	Cover, Bearing	2
10	11340	NBR	O-Ring, Bearing Cover - 70D	2
11	43495	NBR	Seal, Oil, Crankshaft - 70D	2
15	47068	STL	Bearing, Roller	2
20	48600	TNM	Rod, Connecting Assembly	3
25	43494	FCM	Crankshaft, Dual-End (M30)	1
31	828710	—	Protector, Oil Cap w/Foam Gasket	1
32	43211	ABS	Cap, Oil Filler	1
33	14177	NBR	O-Ring, Filler Cap - 70D	1
37	92241	—	Gauge, Oil, Bubble w/Gasket - 80D	1
38	44428	NBR	Gasket, Flat, Oil Gauge - 80D	1
40	92542	S	Screw, Sems HHC (M6x20)	4
48	25625	STCP	Plug, Drain (1/4"x19BSP)	1
49	23170	NBR	O-Ring, Drain Plug - 70D	1
50	49276	ALE	Cover, Rear	1
51	44834	NBR	O-Ring, Rear Cover - 70D	1
53	49273	ALE	Crankcase	1
64	43507	CM	Pin, Crosshead	3
65	48933	SHS	Rod, Plunger (Off Center)	1
65	48931	SHS	Rod, Plunger (Center)	2
69	126596	STCP R	Washer, Oil Seal	3
70	43500	NBR	Seal, Oil Crankcase - 80D	3
75	48937	S	Slinger, Barrier	3
90	48938	CC	Plunger, Ceramic (M30x65)	3
98	46730	NBR	Washer, Seal - 90D	3
99	† 48201	SSL	Retainer, Plunger	3
100	48936	PVDF	Retainer, Seal	3
106	49067	NBR	Seal, LPS w/SS-Spg	3
110	48940	FBB	Manifold, Inlet	1
112	123903	NBR	O-Ring, Inlet Manifold - 90D	3
117	49044	S	Screw, HSH (M10x25)	4
125	48944	SNG	Seal, HPS w/S	3
155	123903	NBR	O-Ring, Spacer - 90D	6
157	48946	BB	Spacer, HPS	3
163	26143	NBR	O-Ring, Seat - 80D	6
164	48951	S	Seat	6
166	48686	SSL	Valve	6
167	48687	SS	Spring, Valve	6
168	48994	PVDF	Retainer, Spring	6
170	123764	S	Washer, Spring Retainer	6
172	17629	NBR	O-Ring, Valve Plug - 80D	3
174	48952	FBB	Plug, Valve	3
185	48948	FBB	Manifold, Discharge	1
188	87952	S	Screw, HSH (M10x55)	10
250	*30764*	*NY*	*Protector, Shaft*	*1*
260	*30613*	*STZP*	*Rail, Angle Assy (Inclds: 30635,30903,30912,30921)*	*1*
269	*30206*	*F*	*Pulley (10") **[See Drive Packages, Tech Bulletin 003]***	*1*
270	*30059*	*STL*	*Hub, "H", M30 (Keyway M8) **[See Drive Packages, Tech Bulletin 003]***	*1*
—	*990012*	*STL*	*Hub, "B", M30 (Keyway M8) **[See Drive Packages, Tech Bulletin 003]***	*1*
283	*34334*	*—*	*Kit, Oil Drain*	*1*
290	*6124*	*—*	*Sealant, Hylomar (3 oz.)*	*1*
299	*816863*	*FBB*	*Head, Complete*	*1*
300	*31770*	*NBR*	*Kit, Seal (Inclds: 98,106,112,125,155)*	*1*
310	*31775*	*NBR*	*Kit, Valve (Inclds: 163,164,166,167,168,170,172)*	*2*
—	*6100*	*—*	*Oil, Case (12 Bottles) ISO 68 Multi-viscosity Hydraulic (Fill to specified crankcase capacity prior to start-up)*	*1*

Italics are optional items. †Production parts are different from repair parts. R Components comply with RoHS Directive.
See Tech Bulletins 002, 003, 024, 035, 036, 043, 053, 074, 077, 083 and 100 for additional information.
MATERIAL CODES (Not Part of Part Number): ABS=ABS Plastic ALE=Aluminum Epoxy BB=Brass CC=Ceramic CM-Chrome-moly
F=Cast Iron FBB=Forged Brass FCM=Forged Chrome-moly NBR=Medium Nitrile (Buna-N) NY=Nylon
PVDF=Polyvinylidene Fluoride S=304SS SHS=304SS/High Strength SS=316SS SSL=316SS/Low Carbon
SNG=Special Blend (Buna) STCP=Steel/Chrome Plated STL=Steel STZP=Steel/Zinc Plated TNM=Special High Strength

EXPLODED VIEW

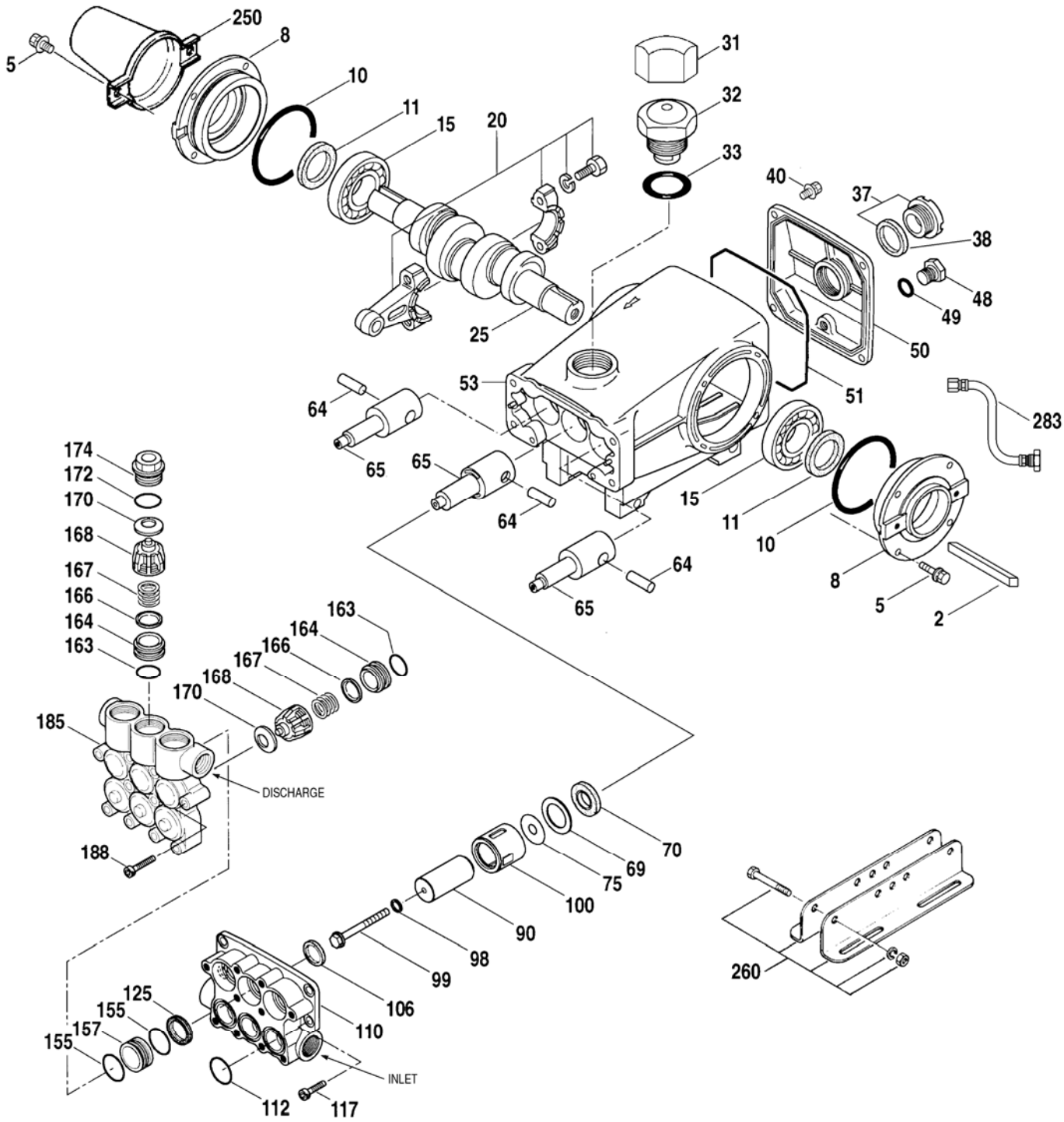

Model
Standard - 1540E
November 2006

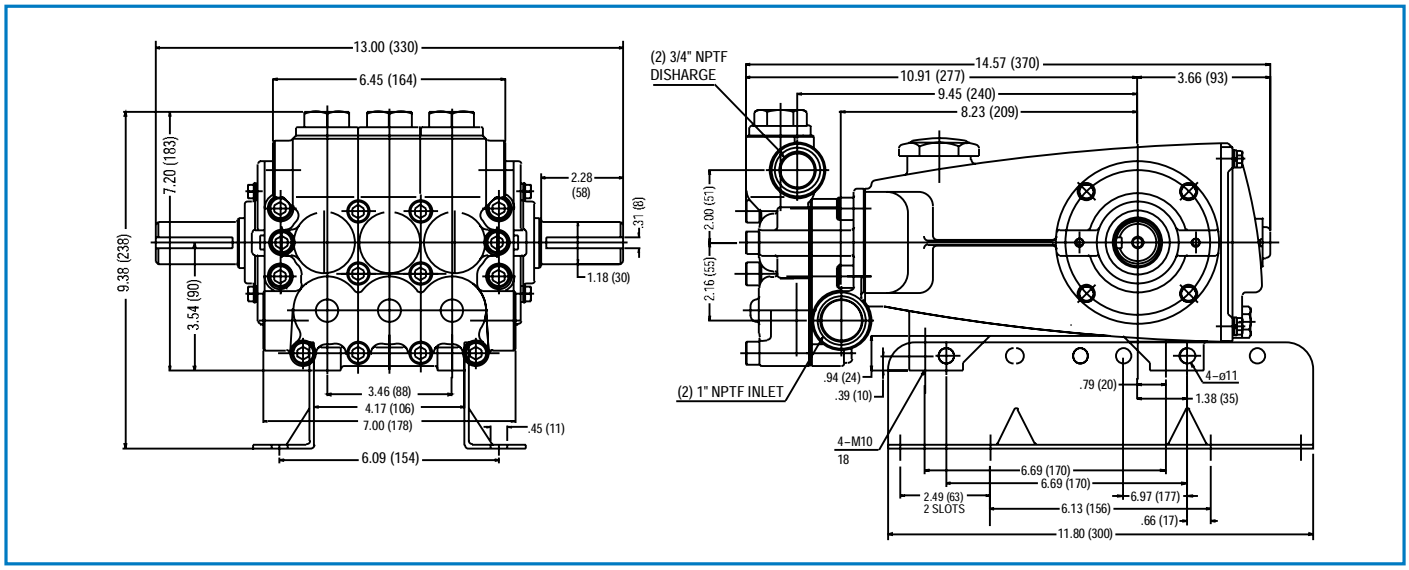

Model 1540E

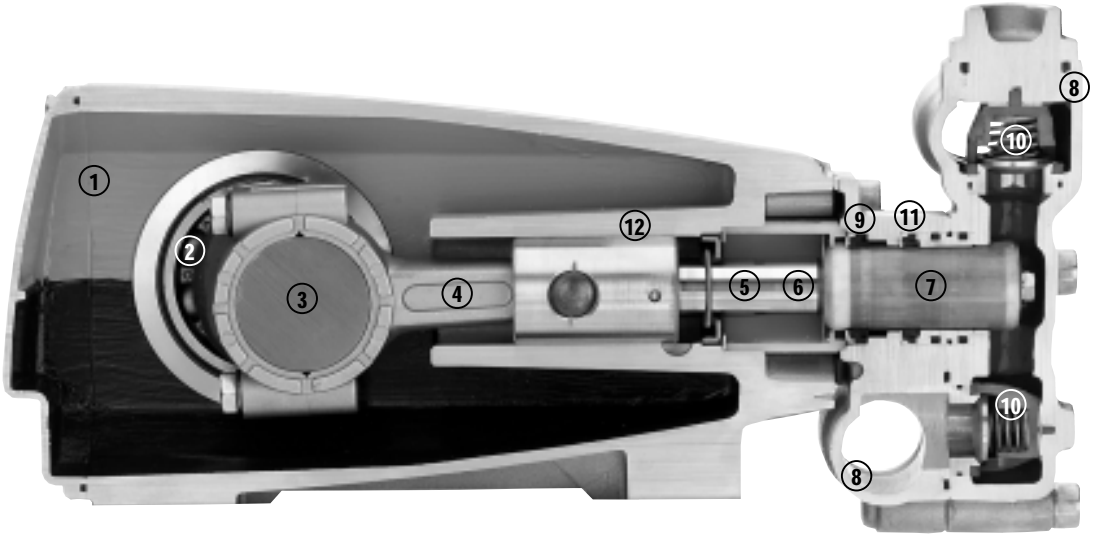

1 Die cast aluminum **crankcase** means high strength, light weight, and excellent tolerance control.

2 Oversized crankshaft **bearings** provide extended bearing life and pump performance.

3 Chrome-moly **crankshaft** provides unmatched strength and surface hardness for long life.

4 Matched oversized TNM **connecting rods** noted for superior tensile strength and bearing quality.

5 Special stainless steel **plunger rods** with high strength crossheads for longevity and corrosion resistance.

6 The stainless steel **slinger** provides back-up protection for the crankcase seal, keeping pumped liquids out of the crankcase.

7 Special concentric, high-density, polished, solid ceramic **plungers** provide a true wear surface and extended seal life.

8 **Manifolds** are a high strength forged brass for long-term, continuous duty.

9 100% wet **seal** design adds to service life by allowing pumped liquids to cool and lubricate on both sides of seals.

10 Stainless steel **valves, seats and springs** provide corrosion-resistance, ultimate seating and extended life.

11 Specially formulated, CAT PUMP exclusive, **Hi-Pressure Seals** offer unmatched performance and seal life.

12 **Crossheads** are 360° supported for uncompromising alignment.

Products described hereon are covered by one or more of the following U.S. patents 3558244, 3652188, 3809508, 3920356, 3930756 and 5035580

World Headquarters
CAT PUMPS
1681 - 94th Lane N.E. Minneapolis, MN 55449 - 4324
Phone (763) 780-5440 — FAX (763) 780-2958
e-mail: techsupport@catpumps.com
www.catpumps.com

International Inquiries
FAX (763) 785-4329
e-mail: intlsales@catpumps.com

The Pumps with Nine Lives

CAT PUMPS (U.K.) LTD.
1 Fleet Business Park, Sandy Lane, Church Crookham
FLEET, Hampshire, GU52 8BF, England
Phone Fleet 44 1252-622031 — Fax 44 1252-626655
e-mail: sales@catpumps.co.uk

N.V. CAT PUMPS INTERNATIONAL S.A.
Heiveldekens 6A, B-2550 Kontich, Belgium
Phone 32-3-450.71.50 — Fax 32-3-450.71.51
e-mail: cpi@catpumps.be www.catpumps.be

CAT PUMPS DEUTSCHLAND GmbH
Buchwiese 2, D-65510 Idstein, Germany
Phone 49 6126-9303 0 — Fax 49 6126-9303 33
e-mail: catpumps@t-online.de www.catpumps.de

PN 993279 Rev A 8616

15 & 25PFR PLUNGER PUMP SERVICE MANUAL

15 FRAME SPLIT MANIFOLD: 1530, 1531, 1540
25 FRAME SPLIT MANIFOLD: 2510, 2511

INSTALLATION AND START-UP INFORMATION

Optimum performance of the pump is dependent upon the entire liquid system and will be obtained only with the proper selection, installation of plumbing, and operation of the pump and accessories.

SPECIFICATIONS: Maximum specifications refer to individual attributes. It is **not** implied that **all maximums** can be performed **simultaneously**. If more than one maximum is considered, check with your CAT PUMPS supplier to confirm the proper performance and pump selection. Refer to individual pump Data Sheets for complete specifications, parts list and exploded view.

LUBRICATION: Fill crankcase with special CAT PUMP oil per pump specifications (15PFR-42 oz., 25PFR-84 oz.). DO NOT RUN PUMP WITHOUT OIL IN CRANKCASE. Change initial fill after 50 hours running period. Thereafter, change oil every **3 months or 500 hour intervals.** Additional lubrication may be required with increased hours of operation and temperature.

PUMP ROTATION: Pump was designed for forward rotation to allow optimum lubrication of the crosshead area. Reverse rotation is acceptable if the crankcase oil level is increased slightly above center dot to assure adequate lubrication.

PULLEY SELECTION: Select size of motor pulley required to deliver the desired flow from Horsepower Requirement and Pulley Selection Chart (refer to Tech Bulletin 003 or individual Data Sheet).

MOTOR SELECTION: The motor or engine driving the pump must be of adequate horsepower to maintain full RPM when the pump is under load. Select the electric motor from the Horsepower Requirement Chart according to required pump discharge flow, maximum **pressure at the pump** and drive losses of approximately 3-5%. Consult the manufacturer of gas or diesel engine for selection of the proper engine size.

MOUNTING: Mount the pump on a rigid, horizontal surface in a manner to permit drainage of crankcase oil. An uneven mounting surface will cause extensive damage to the pump base. To minimize piping stress, **use appropriate flexible hose to inlet and discharge ports**. Use the correct belt; make sure pulleys are aligned. Excessive belt tension may be harmful to the bearings. Hand rotate pump before starting to be certain shaft and bearings are free moving.

LOCATION: If the pump is used in extremely dirty or humid conditions, it is recommended pump be enclosed. Do not store or operate in excessively high temperature areas or without proper ventilation.

INLET CONDITIONS: Refer to complete **Inlet Condition Check-List** in this manual before starting system. DO NOT STARVE THE PUMP OR RUN DRY. Temperatures above 130°F are permissible. Add 1/2 PSI inlet pressure per each degree F over 130°F. Elastomer or RPM changes may be required. See Tech Bulletin 002 or call CAT PUMPS for recommendations.

C.A.T.: Installation of a C.A.T. (Captive Acceleration Tube) is recommended in applications with stressful inlet conditions such as high temperatures, booster pump feed, long inlet lines or quick closing valves.

DISCHARGE CONDITIONS: OPEN ALL VALVES BEFORE STARTING SYSTEM to avoid deadhead overpressure condition and severe damage to the pump or system.

Install a **Pulsation Dampening** device on the discharge head or in the discharge line as close to the head as possible. Be certain the pulsation dampener (Prrrrr-o-lator) is properly precharged for the system pressure (refer to individual Data Sheet).

A **reliable Pressure Gauge** should be installed near the discharge outlet of the high pressure manifold. This is extremely important for adjusting pressure regulating devices and also for proper sizing of the nozzle or restricting orifice. The pump is rated for a maximum pressure; this is the **pressure** which would be **read at the discharge manifold of the pump**, NOT AT THE GUN OR NOZZLE.

Use PTFE thread tape or pipe thread sealant (sparingly) to connect accessories or plumbing. Exercise caution not to wrap tape beyond the last thread to avoid tape from becoming lodged in the pump or accessories. This condition will cause a malfunction of the pump or system.

PRESSURE REGULATION: All systems require both a primary pressure regulating device (i.e., regulator, unloader) and a secondary pressure safety relief device (i.e., pop-off valve, safety valve). The primary pressure device must be installed on the discharge side of the pump. The function of the primary pressure regulating device is to protect the pump from over pressurization, which can be caused by a plugged or closed off discharge line. Over pressurization can severely damage the pump, other system components and can cause bodily harm. The secondary safety relief device must be installed **in-line** between the primary device and the pump **or on the opposite side of the manifold head**. This will ensure pressure relief of the system if the primary regulating device fails. Failure to install such a safely device will void the warranty on the pump.

When the high pressure system is left running with the trigger gun off, the by-pass liquid can be routed to drain or to the pump inlet. If routed to the pump inlet, the **by-pass liquid can quickly develop excessive heat and result in damage to the pump.** A THERMO VALVE installed in the by-pass line is recommended to protect the pump. An AUTO SHUT-OFF ASSEMBLY may also be used.

NOZZLES: A worn nozzle will result in loss of pressure. Do not adjust pressure regulating device to compensate. Replace nozzle and reset regulating device to system pressure.

PUMPED LIQUIDS: Some liquids may require a **flush between operations or before storing.** For pumping liquids other than water, contact your CAT PUMPS supplier.

STORING: For extended storing or between use in cold climates, drain all pumped liquids from pump and **flush with antifreeze solution to prevent freezing and damage** to the pump. DO NOT RUN PUMP WITH FROZEN LIQUID (refer to Tech Bulletin 083).

⚠ WARNING

All systems require both a primary pressure regulating device (i.e., regulator, unloader) and a secondary pressure safety relief device (i.e., pop-off valve, safety valve). Failure to install such relief devices could result in personal injury or damage to the pump or to system components. CAT PUMPS does not assume any liability or responsibility for the operation of a customer's high pressure system.

Products described hereon are covered by one or more of the following U.S. patents 3558244, 3652188, 3809508, 3920356, 3930756 and 5035580

World Headquarters
CAT PUMPS
1681 - 94th Lane N.E. Minneapolis, MN 55449 - 4324
Phone (763) 780-5440 — FAX (763) 780-2958
e-mail: techsupport@catpumps.com
www.catpumps.com

International Inquiries
FAX (763) 785-4329
e-mail: intlsales@catpumps.com

The Pumps with Nine Lives

CAT PUMPS (U.K.) LTD.
1 Fleet Business Park, Sandy Lane, Church Crookham, Fleet
Hampshire GU52 8BF, England
Phone Fleet 44 1252-622031 — Fax 44 1252-626655
e-mail: sales@catpumps.co.uk

N.V. CAT PUMPS INTERNATIONAL S.A.
Heiveldekens 6A, 2550 Kontich, Belgium
Phone 32-3-450.71.50 — Fax 32-3-450.71.51
e-mail: cpi@catpumps.be www.catpumps.be

CAT PUMPS DEUTSCHLAND GmbH
Buchwiese 2, D-65510 Idstein, Germany
Phone 49 6126-9303 0 — Fax 49 6126-9303 33
e-mail: catpumps@t-online.de www.catpumps.de

PN 30000 Rev C 7424

1530, 1531
Complete Inlet/Discharge Valve Assembly

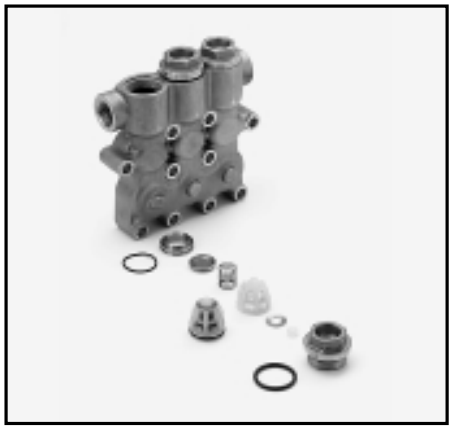

1540
Complete Inlet/Discharge Valve Assembly

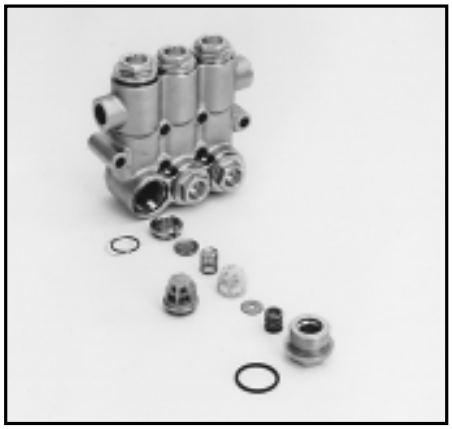

2510, 2511
Complete Inlet/Discharge Valve Assembly

CAUTION: Before commencing with service, shut off drive (electric motor, gas or diesel engine) and turn off water supply to pump. Relieve all discharge line pressure by triggering gun or opening valve in discharge line.

After servicing is completed, turn on water supply to pump, start drive, reset pressure regulating device and secondary valve, read system pressure on the gauge at the pump head. Check for any leaks, vibration or pressure fluctuations and resume operation.

SERVICING THE VALVES
1530, 1531, 1540 and 2510, 2511

DISASSEMBLY

1. Remove the Hex Valve Plugs with O-Ring.
2. On the models 1530 1531, 2510, 2511, remove the exposed Coil Spring and Washer from the top of the Spring Retainer. On the model 1540, remove washer from the top of the Spring Retainer.
3. Using a pliers, grasp the Spring Retainer by the tab at the top and remove from valve chamber. Normally the Valve Assembly will remain together. If the assembly separates during removal, use a reverse pliers and lift the Seats from the chamber.
4. On the models 1530, 1531, 2510, 2511, to separate Valve Assemblies, insert screwdriver into Spring Retainer and press the backside of Valve until Seat separates from the Spring Retainer. Each assembly consists of a Spring Retainer, Spring, Valve, Seat, O-Ring and Back-up-Ring.
5. On the model 1540 ONLY, the Discharge Manifold must be removed in order to remove the inlet valve assemblies. Follow disassembly procedure for REMOVING THE DISCHARGE MANIFOLD.

REASSEMBLY

NOTE: For certain applications apply liquid gasket to the o-ring crevices and seal surfaces. Refer to Tech Bulletin 053 for model identification.

NOTE: EPDM elastomers require silicone-base lubricant.

1. Examine Spring Retainers for internal wear or breaks in the structure and replace as needed.
2. Examine Springs and Coil Springs for fatigue or breaks and replace as needed.
3. Examine Valves and Seats for grooves, pitting or wear and replace as needed.
4. Examine Seat O-Rings and Back-up-Rings for cuts or wear and replace as needed.
5. On the models 1530, 1531, 2510, 2511, install O-Ring, then Back-up-Ring onto Seat. On the model 1540, install O-Ring onto seat.
6. Place the Valve onto the Seat with **dish side down.**
7. Place Spring on Valve and snap the Spring Retainer onto Seat.
8. Lubricate outer O-Ring and Back-up-Ring surface and walls of valve chamber and press Valve Assembly squarely into valve chamber until completely seated.
9. On the models 1530, 1531, 2510, 2511, place the washer, then Coil Spring on top of the Spring Retainer. On the model 1540, place the washer on top of the Spring Retainer.
10. On the 1540 (inlet valve assemblies), place washer into valve chamber on back side of manifold. Lubricate outer o-ring and press valve assembly into valve chamber, **retainer first**, until completely seated.
11. Examine the O-Ring on the Valve Plug and replace if cut or worn. Lubricate new O-Ring before installing on Valve Plug to avoid damaging as they are worked over the plug threads.

    NOTE: It is highly recommended that antiseize lubricant (PN6119) be applied to the threads on all stainless steel components to prevent galling.
12. Slowly thread the Valve Plug into chamber. Exercise caution to avoid extruding or cutting the O-Ring. Torque to specifications in torque chart.
13. On the model 1540, install new O-Rings at bottom inlet ports of Inlet Manifold. Support the Discharge Manifold from the under side and press Discharge Manifold into Inlet Manifold. Thread Hex Socket Head (HSH) screws in hand tight. Torque in sequence to specifications in torque chart.

REMOVING THE DISCHARGE MANIFOLD

1. Remove the HSH screws.
2. Support the manifold from the underside and tap the backside of the Discharge Manifold with a soft mallet to gradually work manifold from pump.
3. Remove the O-Rings from lower Chambers of the face of the Inlet Manifold.

REMOVING THE INLET MANIFOLD

1. Remove the HSH Screws. Rotate the Crankshaft to begin the separation of the Inlet Manifold from the Crankcase.
2. Support the manifold from the underside and tap the rear of the Inlet Manifold with a soft mallet to gradually work from pump.

   NOTE: Two screwdrivers on opposite sides of the manifold may be used to assist separation.

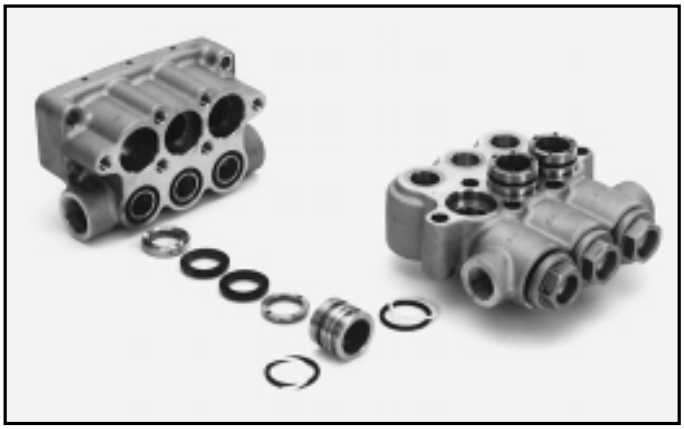

1530, 1531
V-Packing Arrangement

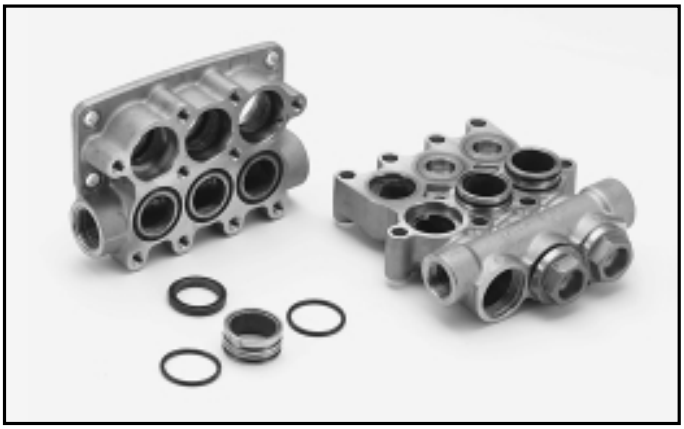

1540
Hi-Pressure Seal Arrangement

SERVICING THE SEALS
1530, 1531, 1540 and 2510, 2511

DISASSEMBLY

1. To service the seals and Packings, it is necessary to remove both the Discharge and Inlet Manifolds. Follow disassembly procedures for REMOVING THE DISCHARGE MANIFOLD and REMOVING THE INLET MANIFOLD.

   NOTE: On the models 1530, 1531, 2510, 2511, the Spacer with Coil Springs may stay in the Discharge Manifold or Inlet Manifold. On the model 1540, the HPS Spacer will generally stay in the Inlet Manifold.

2. On the models 1530, 1531, 2510, 2511, remove the Spacer with Coil Springs from either manifold and exposed O-Rings and Back-up-Rings from the spacer. On the model 1540, remove the exposed O-Ring. Insert two screwdrivers into the grooves on opposite sides of the Spacer and pry from the chamber.

   CAUTION: Exercise caution as the screwdrivers may score o-ring sealing surface.

3. On the models 1530, 1531, 2510, 2511, remove Male Adapter, two V-Packings and Female Adapter from each seal chamber. On the model 1540, remove Hi-Pressure Seal from each Seal chamber.
4. Place the Inlet Manifold on the work surface with **crankcase side up.**
5. On the models 1530, 1531, 1540 use a screwdriver to remove Lo-Pressure Seal (LPS) from backside of manifold.

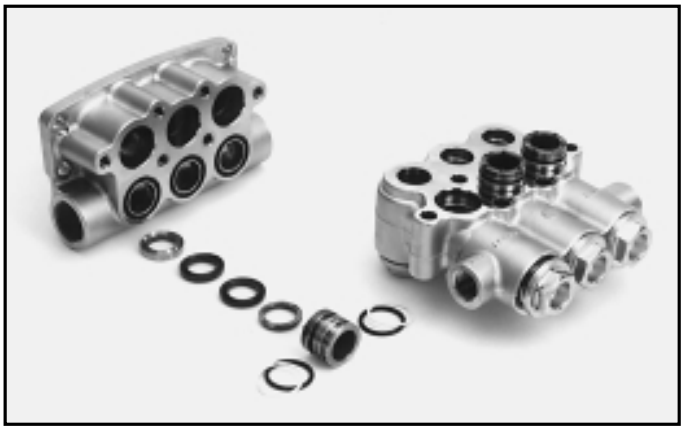

2510, 2511
V-Packing Arrangement

6. On the models 2510, 2511 use a screwdriver to remove Washer and Lo-Pressure Seal from backside of manifold.

   CAUTION: Exercise caution as the screwdriver may score o-ring sealing surface.

REASSEMBLY

NOTE: For certain applications apply liquid gasket to the o-ring crevices and seal surfaces. Refer to Tech Bulletin 053 for model identification.

NOTE: EPDM elastomers require silicone-base lubricant.

NOTE: For standard applications, apply a small amount of oil to the outside edge of the LPS, HPS, VP, MA, FA and o-rings for ease of installation and to avoid damage.

1. Examine Lo-Pressure Seals for wear to the internal ridges, outer surfaces or for broken springs and replace as needed.
2. Press Lo-Pressure Seal into each seal chamber of the Inlet Manifold **with the garter spring down.** On the models 2510, 2511 install washers into each seal chamber.

   NOTE: When using alternate materials, the fit of the special materials may be snug and require gently driving the LPS into position with a cylinder of the same diameter to assure a square seating and no damage to the LPS.

3. On the models 1530, 1531, 2510, 2511, examine the Spacer with Coil Springs for scale build-up, wear, broken or fatigued Coil Springs and replace as needed. Examine both front and rear O-Rings and Back-up-Rings for cuts or deterioration, replace as needed. On the model 1540, examine the HPS Spacer for scale build-up or wear and replace as needed. Examine the front and rear o-rings for cuts or deterioration and replace as needed.
4. On the models 1530, 1531, 2510, 2511, examine Male and Female Adapters for wear and replace as needed.
5. On the models 1530, 1531, 2510, 2511, examine V-Packings for frayed edges or uneven wear and replace as needed.
6. On the model 1540 examine Hi-Pressure Seals for frayed edges or uneven wear and replace as needed.
7. Place the Inlet Manifold on work surface **with crankcase side down.**
8. On the models 1530, 1531, 2510, 2511, place the Female Adapter **with flat side down/"V" side up** into each seal chamber.
9. On the models 1530, 1531, 2510, 2511, fit two new V-Packings together, lubricate the outer surface of the packings and insert into seal chamber **with the "V" side down.** The "V" will mate with "V" side of the Female Adapter.

1530, 1531
Lo-Pressure Seal

1540
Lo-Pressure Seal

2510, 2511
Lo-Pressure Seal

10. On the models 1530, 1531, 2510, 2511, place Male Adapter **with "V" side down** inside each seal chamber.
11. On the models 1530, 1531, 2510, 2511, lubricate outer surface of Spacer with Coil Springs and insert into seal chamber until completely seated.
12. On the model 1540, lubricate outer surfaces of Hi-Pressure Seals and position into seal chamber with metal back down, grooved side up. Lubricate the outer o-rings on the HPS Spacer and press into IM seal chamber.
13. Support the Inlet Manifold from the under side and slide over plungers. Apply Loctite 242 to HSH screw threads and thread in hand tight. Torque in sequence to specifications in torque chart.
14. Install new O-Rings at bottom inlet ports of Inlet Manifold.
15. Support the Discharge Manifold from the under side and press Discharge Manifold into Inlet Manifold. Thread HSH screws in hand tight. Torque in sequence to specifications in torque chart

    NOTE: It is highly recommended that antiseize lubricant (PN6119) be applied to the threads on all stainless steel components to prevent galling.

TORQUE SEQUENCE

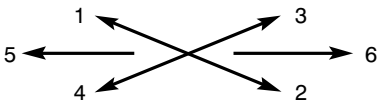

SERVICING THE PLUNGERS
1530, 1531, 1540 and 2510, 2511

DISASSEMBLY

1. To service the plungers, it is necessary to remove the Discharge and Inlet Manifolds. Follow disassembly procedures for REMOVING THE DISCHARGE MANIFOLD and REMOVING THE INLET MANIFOLD.
2. On the models 1530, 1531, remove the two-piece Seal Retainer and Wick from each Plunger Rod.
3. On the models 2510, 2511, remove the one-piece Seal Retainer and Wick from each Plunger Rod.
4. On the model 1540, remove the one-piece Seal Retainer from each Plunger Rod.
5. Using a wrench, loosen the Plunger Retainers about three to four turns.
6. Push the Ceramic Plungers back towards the crankcase to separate from the Plunger Retainers and proceed with unthreading the Plunger retainers by hand.
7. Remove Plunger Retainers, O-Rings, Back-up-Rings and Gaskets.

   NOTE: On the Models 1531, 2510, 2511, the Plunger Retainer Studs may stay on Plunger Rods or come off with Plunger Retainers.
8. On the models 1530, 1531, 1540, remove Ceramic Plungers and Barrier Slingers.
9. On the models 2510, 2511, remove Ceramic Plungers, Keyhole Washers and Barrier Slingers.

REASSEMBLY

1. Visually inspect Crankcase Oil Seals for deterioration or leaks and contact CAT PUMPS for assistance with replacement.
2. Examine Plunger Retainers, Studs, Barrier Slingers and Keyhole Washers for wear and replace as needed.
3. On the models 1530, 1531, 1540, slide Barrier Slingers over Plunger Rods **with concave side away from crankcase.**
4. On the models 2510, 2511, slide Keyhole Washer over Plunger Rods with **split ends facing downward.**
5. Examine Ceramic Plungers for scoring, scale build-up, chips or cracks and replace as needed. Generally the ceramic plungers do not need to be replaced.
6. Slide Ceramic Plungers over Plunger Rods.

1530, 1531
Plunger Arrangement

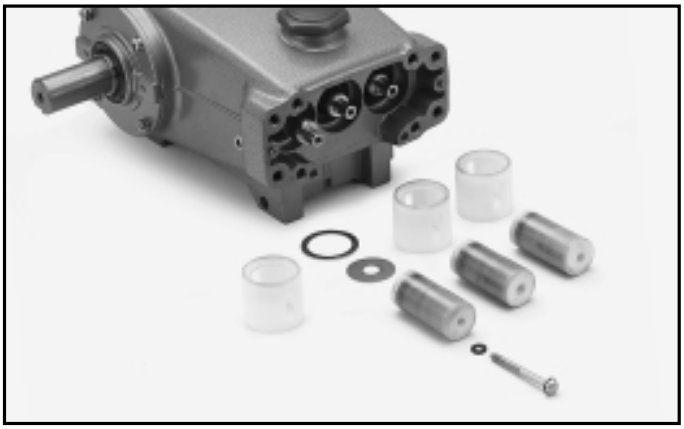

1540
Plunger Arrangement

NOTE: Ceramic Plunger can only be installed in one direction. Do not force onto Plunger Rod.

NOTE: Do not lubricate wicks at initial start-up. Operate for 10 to 15 minutes to allow grease from LPS to penetrate the plunger surface, then lubricate as needed.

7. Examine Gaskets, O-Rings and Back-up-Rings for cuts or wear and replace as needed.
8. On the models 1530, 1531, 2510, 2511, install Gaskets first, then O-Rings and Back-up-Rings onto Plunger Retainers.

   NOTE: Lubricate O-Rings and Back-up-Rings for ease in installation and to reduce possible damage.
9. On the model 1540, install Gasket onto Plunger Retainers.
10. Apply Loctite 242 to exposed threads on the Plunger Retainer and torque per chart.
11. Rotate the crankshaft so the two outside plungers are extended the same distance.
12. On the models 1530, 1531, 2510, 2511, install Seal Retainer onto the plunger rod with new Wicks, long tab down. On the model 1530, 1531, the drain slots should face the crankcase with openings to the top and bottom. On the models 1540, 2510, 2511, the Seal Retainer openings should be at top and bottom. Press completely into crankcase.
13. Lightly lubricate ceramic plungers to assist in installing the manifold.
14. Support the Inlet Manifold from the under side and slide over plungers. Press completely into crankcase. Apply Loctite 242 to HSH screw threads and thread in hand tight. Torque in sequence to specifications in torque chart.
15. Install new O-Rings at bottom inlet ports of Inlet Manifold.
16. Support the Discharge Manifold from the under side and align manifold with Inlet Manifold. Thread in hand tight. Torque in sequence to specifications in torque chart.

    NOTE: It is highly recommended that antiseize lubricant (PN6119) be applied to the threads on all stainless steel components to prevent galling.

SERVICING THE CRANKCASE SECTION

1530, 1531, 1540 and 2510, 2511

1. While Manifolds, Plungers and Seal Retainers are removed examine Crankcase Oil Seals for leaking and wear.
2. Check for any signs of leaking at Rear Cover, Drain Plug, Bubble Gauge and Dipstick (2510, 2511).
3. Check oil level and check for evidence of water in oil. Change crankcase oil on a regular schedule. See Preventative Maintenance Check-List.
4. Rotate Crankshaft by hand to feel for smooth bearing movement.
5. Examine Crankshaft Oil Seals externally for drying, cracking or leaking.
6. Contact CAT PUMPS or your local distributor if crankcase service is required. Refer to Tech Bulletin 035.

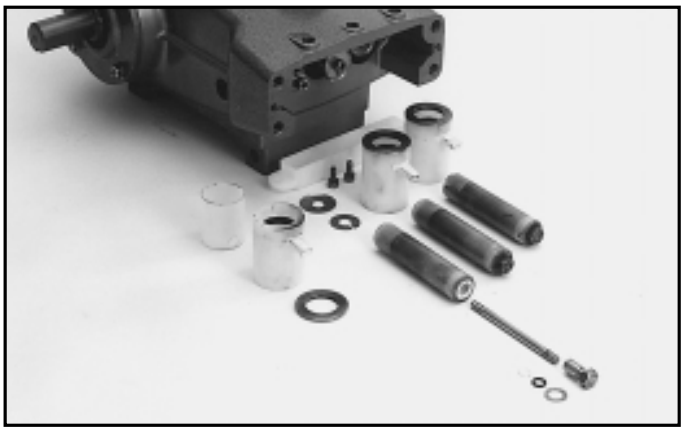

2510, 2511
Plunger Arrangement

PREVENTATIVE MAINTENANCE CHECK-LIST

Check	Daily	Weekly	50 hrs.	500 hrs.*	1500 hrs.**	3000 hrs.**
Clean Filters	x					
Oil Level/Quality	x					
Oil Leaks	x					
Water Leaks	x					
Belts, Pulley		x				
Plumbing		x				
Initial Oil Change			x			
Oil Change				x		
Seal Change					x	
Valve Change						x
Accessories					x	

* If other than CAT PUMPS special multi-viscosity ISO68 oil is used, change cycle should be every 300 hours.

** Each system's maintenance cycle will be exclusive. If system performance decreases, check immediately. If no wear at 1500 hours, check again at 2000 hours and each 500 hours until wear is observed. Valves typically require changing every other seal change.

Duty cycle, temperature, quality of pumped liquid and inlet feed conditions all effect the life of pump wear parts and service cycle.

** Remember to service the regulator/unloader at each seal servicing and check all system accessories and connections before resuming operation.

Refer to video for additional assistance.

TORQUE CHART

Pump Item Pump Model	Thread	Tool Size [P/N]	in. lbs.	Torque ft. lbs.	Nm
Plunger Retainer					
15PFR	M6	M12 Hex	55	4.6	6.2
25PFR	M7	M14 Hex [25053]	108	9.0	12.2
Inlet Manifold Screws					
15PFR	M10	M8 Allen [33046]	222	18.5	25
25PFR	M12	M10 Allen [33047]	355	30.0	40
Discharge Manifold Screws					
1530, 1531, 2510, 2511	M12	M10 Allen [33047]	355	30.0	40
1540	M10	M8 Allen [33046]	250	21.0	28
Valve Plug					
15PFR	M36	M32 Hex	1060	88	119
25PFR	M42	M36 Hex	1680	140	190
Rear Cover/Bearing Cover Screws					
15PFR	M6	M10 Hex [25082]	50	4.0	5.4
25PFR	M8	M13 Hex [25324]	115	9.58	13
Connecting Rod Screws					
15PFR, 25PFR	M8	M13 Hex [25324]	216	18	24
Bubble Oil Gauge					
15PFR Only	M28	Oil Gauge Tool [44050]	45	3.8	5

TECHNICAL BULLETIN REFERENCE CHART

No.	Subject	Models
002	Inlet Pressure VS Liquid Temperature	All Models
003	Power Unit Drive Packages	3PFR - 68PFR, 10FR - 60FR
024	Lubrication of Lo-Pressure Seals	All Models
035	Servicing Crankcase Section	7PFR - 60PFR
036	Cylinder and Plunger Reference Chart	All Models
043	LPS and HPS Servicing	All Plunger Models
053	Liquid Gasket	All Plunger NAB-S.S. Models
064	By-Pass Hose Sizing	All Unloaders/Regulators
074	Torque Chart	Piston and Plunger Pumps
077	Oil Drain Kit	All Models (except 2SF/4SF)
083	Winterizing a Pump	All Models
085	Crankcase Change	25 Frame
095	Galling Preventative	All Stainless Steel Pumps

INLET CONDITION CHECK-LIST

Review Before Start-Up

Inadequate inlet conditions can cause serious malfunctions in the best designed pump. Surprisingly, the simplest of things can cause the most severe problems or go unnoticed to the unfamiliar or untrained eye. REVIEW THIS CHECK-LIST BEFORE OPERATION OF ANY SYSTEM. Remember, no two systems are alike, so there can be no **ONE** best way to set-up a system. All factors must be carefully considered.

INLET SUPPLY should exceed the maximum flow being delivered by the pump to assure proper performance.

- ❑ Open inlet shut-off valve and turn on water supply to avoid starving pump. **DO NOT RUN PUMP DRY.**
- ❑ Temperatures above 130°F are permissible. Add 1/2 PSI inlet pressure per each degree F over 130°F. Elastomer or RPM changes may be required. See Tech Bulletin 002 or call CAT PUMPS for recommendations.
- ❑ Avoid closed loop systems especially with high temperature, ultra-high pressure or large volumes. Conditions vary with regulating/unloader valve.
- ❑ Low vapor pressure liquids, such as solvents, require a booster pump and C.A.T. to maintain adequate inlet supply.
- ❑ Higher viscosity liquids require a positive head and a C.A.T. to assure adequate inlet supply.
- ❑ Higher temperature liquids tend to vaporize and require positive heads and C.A.T. to assure adequate inlet supply.
- ❑ When using an inlet supply reservoir, size it to provide adequate liquid to accommodate the maximum output of the pump, generally a minimum of 6-10 times the GPM (however, a combination of system factors can change this requirement); provide adequate baffling in the tank to eliminate air bubbles and turbulence; install diffusers on all return lines to the tank.

INLET LINE SIZE should be adequate to avoid starving the pump.

- ❑ Line size must be a minimum of one size larger than the pump inlet fitting. Avoid tees, 90 degree elbows or valves in the inlet line of the pump to reduce the risk of flow restriction and cavitation.
- ❑ The line MUST be a FLEXIBLE hose, NOT a rigid pipe, and reinforced on SUCTION systems to avoid collapsing.
- ❑ The simpler the inlet plumbing the less the potential for problems. Keep the length to a minimum, the number of elbows and joints to a minimum (ideally no elbows) and the inlet accessories to a minimum.
- ❑ Use pipe sealant to assure air-tight, positive sealing pipe joints.

INLET PRESSURE should fall within the specifications of the pump.

- ❑ Acceleration loss of liquids may be increased by high RPM, high temperatures, low vapor pressures or high viscosity and may require pressurized inlet and C.A.T. to maintain adequate inlet supply. DO NOT USE C.A.T. WITH SUCTION INLET.
- ❑ Optimum pump performance is obtained with +20 PSI (1.4 BAR) inlet pressure and a C.A.T. for certain applications. With adequate inlet plumbing, most pumps will perform with flooded suction. Maximum inlet pressure is 70 PSI (4.9 BAR).
- ❑ After prolonged storage, pump should be rotated by hand and purged of air to facilitate priming. Disconnect the discharge port and allow liquid to pass through pump and measure flow.

INLET ACCESSORIES are designed to protect against over pressurization, control inlet flow, contamination or temperature and provide ease of servicing.

- ❑ A shut-off valve is recommended to facilitate maintenance.
- ❑ Installation of a C.A.T. is essential in applications with stressful conditions such as high temperatures, booster pump feed or long inlet lines. **Do not use C.A.T. with negative inlet pressure.**
- ❑ A stand pipe can be used in some applications to help maintain a positive head at the pump inlet line.
- ❑ Inspect and clean inlet filters on a regular schedule to avoid flow restriction.
- ❑ A pressure transducer is necessary to accurately read inlet pressure. **Short term, intermittent cavitation will not register on a standard gauge.**
- ❑ All accessories should be sized to avoid restricting the inlet flow.
- ❑ All accessories should be compatible with the solution being pumped to prevent premature failure or malfunction.
- ❑ Optional inlet protection can be achieved by installing a pressure cut off switch between the inlet filter and the pump to shut off pump when there is no positive inlet pressure.

BY-PASS TO INLET Care should be exercised when deciding the method of by-pass from control valves.

- ❑ It is recommended the by-pass be directed to a baffled reservoir tank, with at least one baffle between the by-pass line and the inlet line to the pump.
- ❑ Although not recommended, by-pass liquid may be returned to the inlet line of the pump if the system is properly designed to protect your pump. When a pulsation dampener is used, a PRESSURE REDUCING VALVE must be installed on the inlet line (**BETWEEN** THE BY-PASS CONNECTION AND THE INLET TO THE PUMP) to avoid excessive pressure to the inlet of the pump. It is also recommended that a THERMO VALVE be used in the by-pass line to monitor the temperature build-up in the by-pass loop to avoid premature seal failure.
- ❑ A reinforced, flexible, low pressure hose rated up to 300 PSI should be used for routing by-pass back to the pump inlet.
- ❑ Caution should be exercised not to undersize the by-pass hose diameter and length. Refer to Technical Bulletin 064 for additional information on the size and length of the by-pass line.
- ❑ Check the pressure in the by-pass line to avoid over pressurizing the inlet.
- ❑ The by-pass line should be connected to the pump inlet line at a gentle angle of 45° or less and no closer than 10 times the pump inlet port diameter e.g. 1-1/2" port size = 15" distance from pump inlet port.

HOSE FRICTION LOSS

Water* Flow Gal/Min	PRESSURE DROP IN PSI PER 100 FT OF HOSE WITH TYPICAL WATER FLOW RATES — Hose Inside Diameters, Inches						
	1/4	5/16	3/8	1/2	5/8	3/4	1"
0.5	16	5	2				
1	54	20	7	2			
2	180	60	25	6	2		
3	380	120	50	13	4	2	
4		220	90	24	7	3	
5		320	130	34	10	4	
6			220	52	16	7	1
8			300	80	25	10	2
10			450	120	38	14	3
15			900	250	80	30	7
20			1600	400	121	50	12
25				650	200	76	19
30					250	96	24
40					410	162	42
50					600	235	62
60						370	93

*At a fixed flow rate with a given size hose, the pressure drop across a given hose length will be directly proportional. A 50 ft. hose will exhibit one-half the pressure drop of a 100 ft. hose. Above values shown are valid at all pressure levels.

WATER LINE PRESSURE LOSS

PRESSURE DROP IN PSI PER 100 FEET

Water GPM	Steel Pipe—Nominal Dia. 1/4	3/8	1/2	3/4	1	1 1/4	1 1/2	Brass Pipe—Nominal Dia. 1/4	3/8	1/2	3/4	1	1 1/4	1 1/2	Copper Tubing O.D. Type L 1/4	3/8	1/2	5/8	3/4	7/8
1	8.5	1.9						6.0	1.6						120	13	2.9	1.0		
2	30	7.0	2.1					20	5.6	1.8					400	45	10	3.4	1.3	
3	60	14	4.5	1.1				40	11	3.6						94	20	6.7	2.6	
5	150	36	12	2.8				100	28	9.0	2.2					230	50	17	6.1	3.0
8	330	86	28	6.7	1.9			220	62	21	5.2	1.6				500	120	40	15	6.5
10	520	130	43	10	3.0			320	90	30	7.8	2.4					180	56	22	10
15		270	90	21	6.2	1.6			190	62	16	5.0	1.5					120	44	20
25		670	240	56	16	4.2	2.0		470	150	40	12	3.8	1.7				330	110	50
40					66	17	8.0					39	11	5.0				550	200	88
60						37	17						23	11						
80						52	29						40	19						
100					210	107	48						61	28						

RESISTANCE OF VALVES AND FITTINGS

Nominal Pipe Size Inches	Inside Diameter Inches	Equivalent Length of Standard Pipe in Feet: Gate Valve	Globe Valve	Angle Valve	45˚ Elbow	90˚ Elbow	180˚ Close Ret	Tee Thru Run	Tee Thru Branch
1/2	**0.622**	0.41	18.5	9.3	0.78	1.67	3.71	0.93	3.33
3/4	**0.824**	0.54	24.5	12.3	1.03	2.21	4.90	1.23	4.41
1	**1.049**	0.69	31.2	15.6	1.31	2.81	6.25	1.56	5.62
1 1/4	**1.380**	0.90	41.0	20.5	1.73	3.70	8.22	2.06	7.40
1 1/2	**1.610**	1.05	48.0	24.0	2.15	4.31	9.59	2.40	8.63
2	**2.067**	1.35	61.5	30.8	2.59	5.55	12.30	3.08	11.60
2 1/2	**2.469**	1.62	73.5	36.8	3.09	6.61	14.70	3.68	13.20
3	**3.068**	2.01	91.5	45.8	3.84	8.23	18.20	4.57	16.40
4	**4.026**	2.64	120.0	60.0	5.03	10.80	23.90	6.00	21.60

Arriving at a total line pressure loss, consideration should then be given to pressure loss created by valves, fittings and elevation of lines.

If a sufficient number of valves and fittings are incorporated in the system to materially affect the total line loss, add to the total line length, the equivalent length of line of each valve or fitting.

TYPICAL RESERVOIR TANK

RECOMMENDED 6 TO 10 TIMES SYSTEM CAPACITY

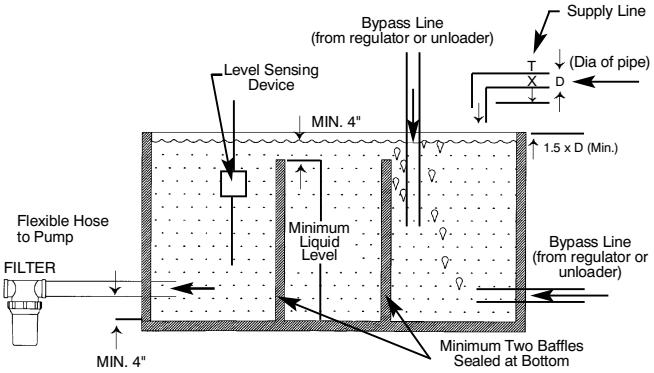

Handy Formulas to Help You

Q. **How can I find the RPM needed to get specific GPM (Gallons Per Minute) I want?**

A. Desired RPM = Desired GPM x $\frac{\text{Rated RPM}}{\text{Rated GPM}}$

Q. **I have to run my pump at a certain RPM. How do I figure the GPM I'll get?**

A. Desired GPM = Desired RPM x $\frac{\text{Rated GPM}}{\text{Rated RPM}}$

Q. **Is there a simple way to find the approximate horsepower I'll need to run the pump?**

A. Electric Brake Horsepower Required = $\frac{\text{GPM x PSI}}{1460}$ (Standard 85% Mech. Efficiency)

Q. **What size motor pulley should I use?**

A. Pump Pulley (Outer Diameter) x $\frac{\text{Pump RPM}}{\text{Motor/Engine RPM}}$ (Consult Engine Mfr.)

Q. **How do I calculate the torque for my hydraulic drive system?**

A. Torque (ft. lbs.) = 3.6 $\left(\frac{\text{GPM x PSI}}{\text{RPM}}\right)$

Avoid Cavitation Damage

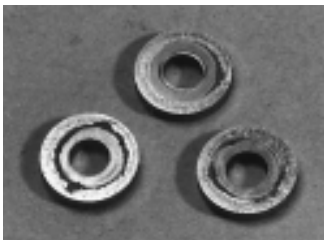

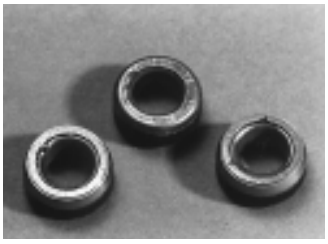

One or several of the conditions shown in the chart below may contribute to cavitation in a system resulting in premature wear, system downtime and unnecessary operating costs.

CONDITION	SOLUTION
Inadequate inlet line size	• Increase line size to the inlet port or one size larger
Water hammering liquid acceleration/ deacceleration	• Install C.A.T. Tube • Move pump closer to liquid supply
Rigid Inlet Plumbing	• Use flexible wire reinforced hose to absorb pulsation and pressure spikes
Excessive Elbows in Inlet Plumbing	• Keep elbows to a minimum and less than 90°
Excessive Liquid Temperature	• Use Thermo Valve in bypass line • Do not exceed pump temperature specifications • Substitute closed loop with baffled holding tank • Adequately size tank for frequent or high volume bypass • **Pressure feed high temperature liquids** • Properly ventilate cabinets and rooms
Air Leaks in Plumbing	• Check all connections • Use PTFE thread tape or pipe thread sealant
Agitation in Supply Tank	• Size tank according to pump output — **Minimum 6-10 times system GPM** • Baffle tank to purge air from liquid and separate inlet from discharge
High Viscosity Liquids	• Verify viscosity against pump specifications before operation • Elevate liquid temperature enough to reduce viscosity • Lower RPM of pump • Pressure feed pump • Increase inlet line size
Clogged Filters	• Perform regular maintenance or use clean filters to monitor build up • Use adequate mesh size for liquid and pump specifications

DIAGNOSIS AND MAINTENANCE

One of the most important steps in a high pressure system is to establish a regular maintenance program. This will vary slightly with each system and is determined by various elements such as the duty cycle, the liquid being pumped, the actual specifications vs rated specifications of the pump, the ambient conditions, the inlet conditions and the accessories in the system. A careful review of the necessary inlet conditions and protection devices required before the system is installed will eliminate many potential problems.

CAT PUMPS are very easy pumps to service and require far less frequent service than most pumps. Typically, only common tools are required, making in-field service convenient, however, there are a few custom tools, special to certain models, that do simplify the process. This service manual is designed to assist you with the disassembly and reassembly of your pump. The following guide will assist in determining the cause and remedy to various operating conditions. You can also review our **FAQ** or **SERVICE** sections on our **WEB SITE** for more facts or contact CAT PUMPS directly.

PROBLEM	PROBABLE CAUSE	SOLUTION
Low pressure	•Worn nozzle.	•Replace with properly sized nozzle.
	•Belt slippage.	•Tighten belt(s) or install new belt(s).
	•Air leak in inlet plumbing.	•Tighten fittings and hoses. Use PTFE liquid or tape.
	•Pressure gauge inoperative or not registering accurately.	•Check with new gauge. Replace worn or damaged gauge.
	•Relief valve stuck, partially plugged or improperly adjusted.	•Clean/adjust relief valve. Replace worn seats/valves and o-rings.
	•Inlet suction strainer (filter) clogged or improperly sized.	•Clean filter. Use adequate size filter. Check more frequently.
	•Abrasives in pumped liquid.	•Install proper filter.
	•Leaky discharge hose.	•Replace discharge hose with proper rating for system.
	•Inadequate liquid supply.	•Pressurize inlet and install C.A.T.
	•Severe cavitation.	•Check inlet conditions.
	•Worn seals.	•Install new seal kit. Increase frequency of service.
	•Worn or dirty inlet/discharge valves.	•Clean inlet/discharge valves or install new valve kit.
Pulsation	•Faulty Pulsation Dampener.	•Check precharge. If low, recharge, or install a new dampener.
	•Foreign material trapped in inlet/discharge valves.	•Clean inlet/discharge valves or install new valve kit.
Water leak		
•Under the manifold	•Worn V-Packings, High Pressure or Lo-Pressure Seals.	•Install new seal kit. Increase frequency of service.
	•Worn adapter o-rings.	•Install new o-rings.
•Into the crankcase	•Humid air condensing into water inside the crankcase.	•Install oil cap protector. Change oil every 3 months or 500 hours.
	•Excessive wear to seals and V-Packings.	•Install new seal kit. Increase frequency of service.
Knocking noise		
•Inlet supply	•Inadequate inlet liquid supply.	•Check liquid supply. Increase line size, pressurize or install C.A.T.
•Bearing	•Broken or worn bearing.	•Replace bearing.
•Pulley	•Loose pulley on crankshaft	•Check key and tighten set screw.
Oil leak		
•Crankcase oil seals.	•Worn crankcase oil seals.	•Replace crankcase oil seals.
•Crankshaft oil seals and o-rings.	•Worn crankshaft oil seals or o-rings on bearing cover.	•Remove bearing cover and replace o-rings and/or oil seals.
•Drain plug	•Loose drain plug or worn drain plug o-ring.	•Tighten drain plug or replace o-ring.
•Bubble gauge	•Loose bubble gauge or worn bubble gauge gasket.	•Tighten bubble gauge or replace gasket.
•Rear cover	•Loose rear cover or worn rear cover o-ring.	•Tighten rear cover or replace o-ring.
•Filler cap	•Loose filler cap or excessive oil in crankcase.	•Tighten filler cap. Fill crankcase to specified capacity.
Pump runs extremely rough		
•Inlet conditions	•Restricted inlet or air entering the inlet plumbing	•Correct inlet size plumbing. Check for air tight seal.
•Pump valves	•Stuck inlet/discharge valves.	•Clean out foreign material or install new valve kit.
•Pump seals	•Leaking V-Packings, High Pressure or Lo-Pressure seals.	•Install new seal kit. Increase frequency of service.
Premature seal failure	•Scored plungers.	•Replace plungers.
	•Over pressure to inlet manifold.	•Reduce inlet pressure per specifications.
	•Abrasive material in the liquid being pumped.	•Install proper filtration at pump inlet and clean regularly.
	•Excessive pressure and/or temperature of pumped liquid.	•Check pressure and inlet liquid temperature.
	•Running pump dry.	•DO NOT RUN PUMP WITHOUT LIQUID.
	•Starving pump of adequate liquid.	•Increase hose one size larger than inlet port size. Pressurize and install C.A.T.
	•Eroded manifold.	•Replace manifold. Check liquid compatibility.

Stainless Steel
Rechargeable Pulsation Dampener

Models 6013 6014,6015

FEATURES

- Nitrogen precharged to eliminate moisture and bladder deterioration.
- Convenient bottom port for easy mounting directly onto discharge manifold.
- Sealed valve for positive pressure lock.
- 316 Stainless Steel housing for special compatibility.
- Adjustable precharge with optimum setting at 60% of system pressure.

SPECIFICATIONS

	U.S. Measure	Metric Measure
MODEL 6013		
Maximum Flow	40 GPM	(151 L/M)
Maximum Working Pressure	2000 PSI	(140 BAR)
Precharge	450 PSI	(30 BAR)
Temperature Range	+5° to 300°F	(–15 to 150°C)
Volume	45 cu. in.	(0.74 L)
Safety Factor	4/1	(4/1)
Bladder Construction	**FPM**	**(FPM)**
Port Size	1" NPTM	(1" NPTM)
Diameter	4.44"	(113 mm)
Length	7.79"	(198 mm)
Weight	6.28 lbs.	(2.8 kg)
MODEL 6014		
Maximum Flow	25 GPM	(95 L/M)
Maximum Working Pressure	2400 PSI	(170 BAR)
Precharge	450 PSI	(30 BAR)
Temperature Range	+5° to 180°F	(–15 to 82°C)
Volume	20 cu. in.	(0.328 L)
Safety Factor	4/1	(4/1)
Bladder Construction	**NBR**	**(NBR)**
Port Size	3/4" NPTM	(3/4" NPTM)
Diameter	3.66"	(93 mm)
Length	5.91"	(150 mm)
Weight	2.9 lbs.	(1.31 kg)
MODEL 6015		
Maximum Flow	70 GPM	(265 L/M)
Maximum Working Pressure	1500 PSI	(105 BAR)
Precharge	450 PSI	(30 BAR)
Temperature Range	+5° to 180°F	(–15 to 82°C)
Volume	120 cu. in.	(1.97 L)
Safety Factor	4/1	(4/1)
Bladder Construction	**NBR**	**(NBR)**
Port Size	1-1/4" NPTM	(1-1/4" NPTM)
Diameter	6.30"	(160 mm)
Length	9.0"	(229 mm)
Weight	9.3 lbs.	(4.2 kg)

INSTALLATION INSTRUCTIONS

SELECTION: The Prrrrr-O-Lator should be selected to match the flow and pressure requirements of the system and satisfy the liquid compatibility.

INSTALLATION: The Prrrrr-O-Lator should be mounted directly onto the pump discharge manifold for optimum pulsation dampening and to avoid system vibration damage.

OPERATION: The Prrrrr-O-Lator should be precharged with **dry Nitrogen only.**

⚠ WARNING
Never use oxygen or air. This could cause an explosion.

The Prrrrr-O-Lator is standardly precharged to 450 PSI, however, it may be adjusted to offer a more precise control of pulsation in critical applications such as reverse osmosis.

At a standard temperature of 70°F, optimum accumulator performance is obtained when the precharge is calibrated at 50% of the system operating pressure.

NOTE

When operating at the lower temperatures, precharge should be 15% higher or 65% of system pressure. When operating at higher temperatures, precharge should be 15% lower or 35% of system pressure.

This precharge should be checked every 12 months for normal operation and more frequently for continuous-duty operation.

NOTE

Up to 50 PSI precharge pressure can be lost during the checking of your precharge.

DIMENSIONAL

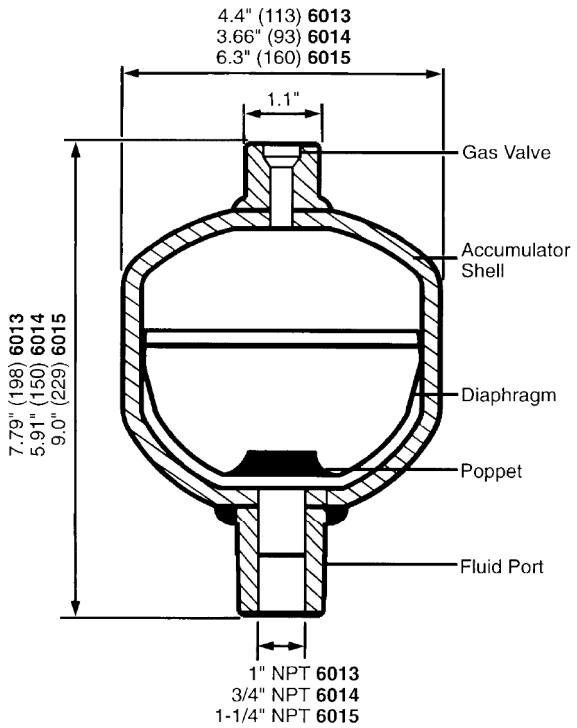

FILLING AND GAUGING INSTRUCTIONS

The following are the steps in both checking the precharge of the accumulator and recharging if there should be a loss of pressure or a need for adjustment.

1. Before checking your precharge, **system pressure should be at zero.** TURN SYSTEM OFF.
2. SLIGHTLY loosen the sealed valve at the top of the accumulator using a 6mm long handled allen wrench. Thread on the Filling and Gauging Assembly hand tight.
3. Be certain the SIDE BLEED VALVE on the gauging assembly is CLOSED.
4. Slowly open the LARGE "T" VALVE at the top of the gauging assembly until completely open. The gauge on the assembly will read the precharge on the accumulator.
5. Completely back off (CLOSE) the valve on the gas regulator, open the nitrogen tank valve and read the nitrogen tank pressure on the first gauge.
6. If the reading on the gauge assembly is 50% of the system pressure, close the top "T" valve and proceed to step 9.
7. If the precharge is too high, keep the top "T" valve open and slowly open the small "T" valve on the side of the gauging assembly to bleed of pressure.
8. If the pressure is less than 50% of the system pressure, slowly open the gas regulator valve until the desired precharge is reached on the second gauge.
9. When the gauge reads the required precharge, close the "T" valve on the top of the gauging assembly to lock the precharge in the accumulator.
10. Back off (CLOSE) the gas regulator.
11. Proceed with opening the small side "T" valve on the gauging assembly to relieve (bleed-off) pressure in the assembly and on the second gauge on the gas regulator.
12. Close the side "T" valve on the gauging assembly and remove the assembly from the accumulator.
13. Tighten the accumulator sealed valve and resume operation.

30940	Complete Filling and Gauging Assembly (Optional)
30941	Allen Wrench (Included in Assembly)
6099	Pressure Gauge 1/8" BSP, 3500 PSI Backmount (Included in Assembly)

Products described hereon are covered by one or more of the following U.S. patents 3558244, 3652188, 3809508, 3920356, 3930756 and 5035580

World Headquarters
CAT PUMPS
1681 - 94th Lane N.E. Minneapolis, MN 55449 - 4324
Phone (763) 780-5440 — FAX (763) 780-2958
e-mail: sales@catpumps.com
www.catpumps.com
International Inquiries
FAX (763) 785-4329
e-mail: intlsales@catpumps.com

"The World's Most Dependable Pumps"

CAT PUMPS (U.K.) LTD.
1 Fleet Business Park, Sandy Lane, Church Crookham, Fleet
Hampshire GU52 8BF, England
Phone Fleet 44 1252-622031 — Fax 44 1252-626655
e-mail: sales@catpumps.co.uk
N.V. CAT PUMPS INTERNATIONAL S.A.
Heiveldekens 6A, 2550 Kontich, Belgium
Phone 32-3-450.71.50 — Fax 32-3-450.71.51
e-mail: cpi@catpumps.be www.catpumps.be
CAT PUMPS DEUTSCHLAND GmbH
Buchwiese 2, D-65510 Idstein, Germany
Phone 49 6126-9303 0 — Fax 49 6126-9303 33
e-mail: catpumps@t-online.de www.catpumps.de

PN 993156 Rev A 12161

APPENDIX 3 Divex – Zinc Anode

(Left blank intentionally)

Divex Ltd

PWS-1 Zinc Anodes

Purpose

Since the PWS-1 Potable Water Supply Skid utilizes fresh potable water processed from seawater by reverse osmosis, zinc anodes are installed in the calorifier pressure vessel as a precautionary measure to prevent galvanic corrosion of the vessel in the unlikely event of the potable water supply salinity levels exceeding acceptable limits.

Description

The anodes comprise a 100 mm long 12.7 mm diameter zinc rod threaded at one end and screwed into a 1/2” blank brass hex plug. See the attached drawing ref. 02369 for details.

Inspection Frequency

1. The anodes should be removed from the calorifier vessel and inspected visually for corrosion every 6 months.

2. If corroded more than approximately 25% of their original size, they should be replaced.

3. Record the inspection result in the PWS-1 Maintenance Logbook.

Anode Replacement

1. New anodes may be ordered by their part number quoted on the attached drawing.

2. Remove the corroded anode from the hex plug using water pump pliers or similar, clean the hex plug female thread and screw the replacement anode in, tightening it firmly (not excessively) with water pump pliers. Do not use PTFE tape on this joint.

3. Clean the hex plug male thread and the calorifier female thread of old PTFE tape, re-tape the hex plug and install the plug in the calorifier vessel socket, taking care to tighten it sufficiently.

4. Check for leaks when the calorifier vessel is back up to full working pressure.

5. Record the anode replacement in the PWS-1 Maintenance Logbook.

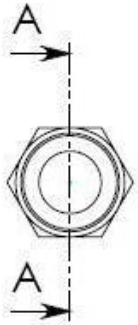

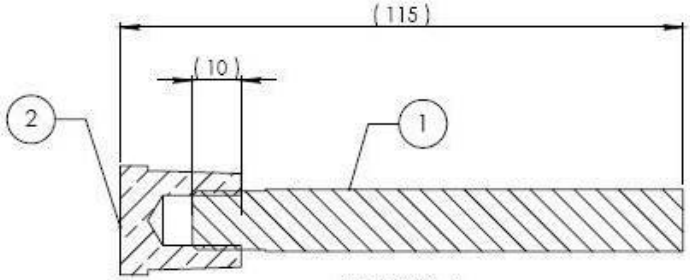

SECTION A-A

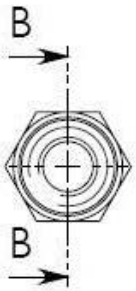

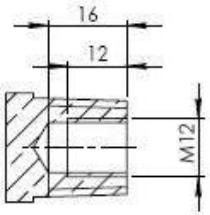

SECTION B-B

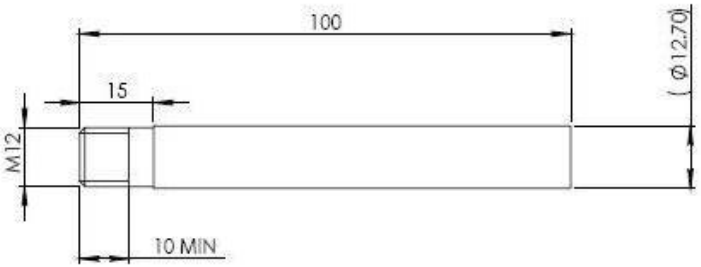

Bill of Materials
[See Sub-Assembly Drawings for lower level BOM's]
[Part No = Drawing No, except for buy out items]

ITEM NO.	QTY.	PART NUMBER	DESCRIPTION	Material	UNIT WEIGHT(kg)
1	1	02369	ZINC ANODE 1/2" ROD	ZINC	0.11
2	1	02417	HEX HEAD PLUG 1/2" HP PARKER No 1/2 HP	Brass	0.06

THIRD ANGLE PROJECTION

MATERIAL:

FINISH:

MASS: (kg) 0.17

COPYRIGHT EXISTS IN THIS DRAWING AND ALL INFORMATION THEREIN IN TERMS OF COPYRIGHT LAW. THIS DRAWING IS ONLY TO BE USED FOR THE PURPOSE FOR WHICH IT WAS SUPPLIED TO THE SECOND PARTY AND MAY NOT BE REPRODUCED IN WHOLE OR IN PART BY ANY MEANS WHATSOEVER AND ITS CONTENTS MAY NOT BE DISCLOSED TO ANY OTHER PARTY WITHOUT THE CONSENT OF DIVEX OCEANICS (PTY) LTD. NO LICENCE OR RIGHTS TO MANUFACTURE THE EQUIPMENT IS GIVEN OR IMPLIED.

DIVEX OCEANICS (PTY) LTD
11 DAWN ROAD
MONTAGUE GARDENS
CAPE TOWN, 7441
SOUTH AFRICA

TEL : +27 (0)21 551-2233
FAX : +27 (0)21 551-2275
email : info@divexoceanics.com
www.divexoceanics.com

A3

REV	DESCRIPTION OF REVISION	ECN	DRAWN	DATE	DRAFTING CHECK BY	DATE	ENGINEER CHECK BY	DATE	APPROVAL BY	DATE
R01	INCREASE THREAD SIZE	---	A.B	12/12/05	A.B	20/12/05	N.M	20/12/05	N.M	09/03/07
0	CHECK PRINT ISSSUE	---	O.L	02/08/05	A.B	04/08/05	N.M	11/08/05	N.M	11/08/05

OVER-TO	±	±	±
0-6	0.1	0.2	0.5
6-30	0.2	0.5	1.0
30-100	0.3	0.8	1.5
100-300	0.5	1.2	2.0
300-1000	0.8	2.0	3.0
1000-3000	1.2	3.0	5.0
3000-PLUS	2.0	4.0	8.0
ANGLE	0.25°	0.5°	1°

SCALE 1:1

PRODUCT/PROJECT PWS-01

ALL DIMENSIONS IN MM (UOS) DO NOT SCALE

ALL DIMENSIONS BEFORE PLATING (UOS)

REMOVE SHARP EDGES & BURRS

TITLE **ZINC ANODE**

PART No. 02369

REV R01

CAD REF/DRG No. 02369

SHT 1 OF 1

APPENDIX 4 Flotect® - Level Switch

(Left blank intentionally)

Series L6

FLOTECT® Liquid Level Switch

Easy In-wall or External Installation, Up to 2000 psig (138 bar)

MODEL L6 WITH EXTERNAL FLOAT CHAMBER

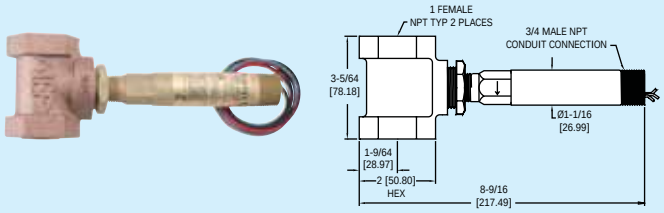

MODEL L6 WITH SPHERICAL FLOAT

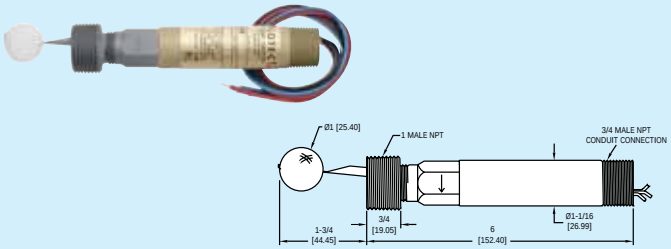

MODEL L6 WITH CYLINDRICAL FLOAT

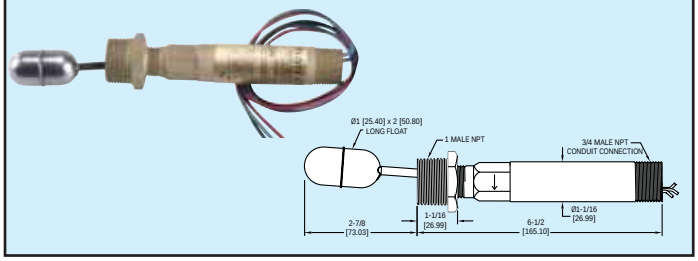

SPECIFICATIONS

Service: Liquids compatible with wetted materials.
Wetted Materials:
Float: Solid polypropylene or 304 SS.
Lower Body: Brass or 303 SS.
Magnet: Ceramic.
External Float Chamber (Tee): Matches lower body choice of brass or 303 SS.
Other: Lever Arm, Spring, Pin, etc.: 301 SS.

Temperature Limit: -4 to 220°F (-20 to 105°C) Standard, MT high temperature option 400°F (205°C)(MT not UL, CSA or ATEX). ATEX compliant AT option ambient temperature: -4 to 167°F (-20 to 75°C) process temperature: -4 to 220°F (-20 to 105°C).
Pressure Limits: See chart below.

Enclosure Rating: Weatherproof and Explosion-proof. Listed with UL and CSA for Class I, Groups A, B, C and D; Class II, Groups E, F, and G. (Group A on stainless steel body models only).ATEX CE0344 Ex II 2 G EEx d IIC T6 Process Temp≤75°C. EC-Type Certificate No.: KEMA 04ATEX2128
Switch Type: SPDT snap switch standard, DPDT snap switch optional.
Electrical Rating: UL models: 5A @ 125/250 VAC (V~). CSA and ATEX models: 5A @ 125/250 VAC (V~); 5A res., 3A ind. @ 30 VDC (V⎓). MV option: .1A @ 125 VAC (V~). MT option: 5A @125/250 VAC (V~). [MT option not UL, CSA or ATEX].
Electrical Connections: UL models: 18 AWG, 18″(460 mm) long. CSA and ATEX models: terminal block.
Upper Body: Brass or 303 SS.

Conduit Connection: 3/4″ male NPT standard, 3/4″ female NPT on junction box models.

Process Connection: 1″ male NPT on models without external float chamber, 1″ female NPT on models with external float chamber.
Mounting Orientation: Horizontal with index arrow pointing down.
Weight: Approximately 1 lb (.5 kg) without external float chamber, 1.75 lb (.8 kg) with external float chamber.
Specific Gravity: See chart below.
Agency Approvals: UL, CSA, CE and ATEX.

Level

MODELS

Model No.	Body	Installation	Float Material	Max. Pressure psig (bar)	Min. Sp. Gr.	
L6EPB-B-S-3-O	Brass	Side Wall Mounting	Polypropylene Spherical	1000 (69)	0.9	
L6EPB-B-S-3-A	Brass	Side Wall Mounting	304 SS Cylindrical	200 (13.8)	0.5	
L6EPB-B-S-3-C	Brass	Side Wall Mounting	304 SS Spherical	350 (24.1)	0.7	
L6EPB-B-S-3-B	Brass	Brass External Float Chamber (Tee)	Polypropylene Spherical	250 (17.2)	0.9	
L6EPB-B-S-3-H	Brass	Brass External Float Chamber (Tee)	304 SS Spherical	250 (17.2)	0.7	
L6EPB-S-S-3-O	303 SS	Side Wall Mounting	Polypropylene Spherical	2000 (138)	0.9	
L6EPB-S-S-3-A	303 SS	Side Wall Mounting	304 SS Cylindrical	200 (13.8)	0.5	
L6EPB-S-S-3-C	303 SS	Side Wall Mounting	304 SS Spherical	350 (24.1)	0.7	
L6EPB-S-S-3-S	303 SS	304 SS External Float Chamber (Tee)	Polypropylene Spherical	2000 (138)	0.9	
L6EPB-S-S-3-L	303 SS	304 SS External Float Chamber (Tee)	304 SS Spherical	350 (24.1)	0.7	

Surprisingly compact, the Series L6 Flotect® Level switch is designed and built for years of trouble-free service in a wide variety of process liquid level applications. Operation is simple and dependable with no mechanical linkage as the level switch is magnetically actuated. The float lever pivoted within the body moves when the process liquid displaces the float. A magnet on the opposite end of the float lever controls a second magnet on the switch actuating lever located in the switch housing.

FEATURES

- Leak proof lower body machined from bar stock
- Choice of models for direct side wall mounting or mounted in a tee to act as an external float chamber
- Weatherproof
- Explosion-proof (listings included in specifications)
- Electrical assembly can be easily replaced without removing the unit from the installation so that the process does not have to be shut down
- Sensitive to level changes of less than 1/2″ (12 mm)

Options:

Gold Plated Contacts option for dry circuits,add suffix **-MV** (see electrical rating in specifications)
High Temperature option rated 400°F (204°C), add suffix **-MT** (see electrical rating in specifications, no listings or approvals, only available on models with stainless steel floats)
CSA and UL approved construction, includes weatherproof and explosion-proof junction box, add suffix **-CSA**
ATEX approved construction includes, weatherproof and explosion-proof, junction box add suffix **-AT**
DPDT contacts, change seventh character in model number to “D”. Example: L6EPB-B-D-3-O
303 Stainless Steel Upper Body, change fifth character in model number to “S”. Example: L6EPS-S-S-3-S

Options Not Shown: 1-1/2″ and 2″ male NPT process connection, 2″ female NPT connection tee, and top mount.

APPENDIX 5 Ham-Let – Non-Return Valve

(Left blank intentionally)

CHECK VALVES

H400 SERIES

H-400	General purpose fixed cracking pressure check valve (MAWP 3000 psig)
H-400 HP	High performance fixed cracking pressure check valve (MAWP 6000 psig)
H-400 A	Adjustable cracking pressure check valve (MAWP 3000 psig)
H-400 OPA	One piece adjustable cracking pressure check valve (MAWP 3000 psig)
H-400 OP	Compact one piece fixed cracking pressure check valve (MAWP 3000 psigs)

HAM-LET®
ADVANCED CONTROL TECHNOLOGY

H400 SERIES

FEATURES

- 316 St.St. End Brass Construction
- Moderate Pressure Characteristics (up to 3000 psi)
- Compact Design
- Interchangeable Parts
- Variable fixed cracking-pressure springs
- HAM-LET LET-LOK®, Male & Female NPT, and HTC® Face-Seal Bead Ends

GENERAL

The H400 Series is a compact design for instumentation panels and systems, and provides an accurate operating point. H400 valves are normally closed. When differential pressure between inlet and outlet is higher than the set pressure of the spring, the loaded poppet will move backwards and will provide a free passage of flow through the valve.

H400 - MATERIALS SIZE 1/8''-1/2''

Item No.		Components	Qty.	Valve Body Material
1		Body	1	A.I.S.I 316
2		O-ring	1	Viton®
3		Poppet	1	A.I.S.I 316
4	A	Spring 1/3 psi	1	A.I.S.I 302
	B	Spring 3 psi	1	A.I.S.I 302
	C	Spring 10 psi	1	A.I.S.I 302
	D	Spring 25 psi	1	A.I.S.I 302
5		End	1	A.I.S.I 316

H400 - MATERIALS : SIZE 3/4''-1''

Item No.		Components	Qty.	Valve Body Material
1		Body	1	A.I.S.I 316
2		O-ring	1	Viton®
3B		Poppet	1	A.I.S.I 316
4	A	Spring 1/3 psi	1	A.I.S.I 302
	B	Spring 3 psi	1	A.I.S.I 302
	C	Spring 10 psi	1	A.I.S.I 302
	D	Spring 25 psi	1	A.I.S.I 302
5		End	1	A.I.S.I 316
6		Upper O-ring	1	Viton®

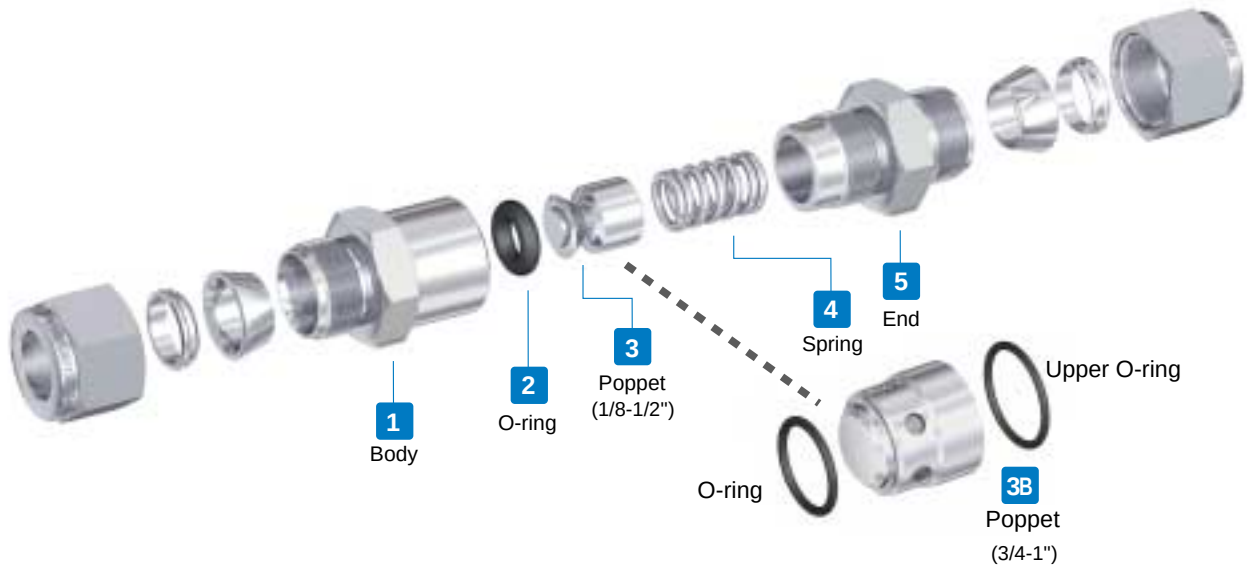

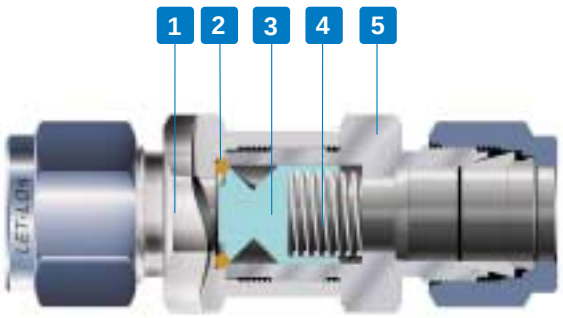

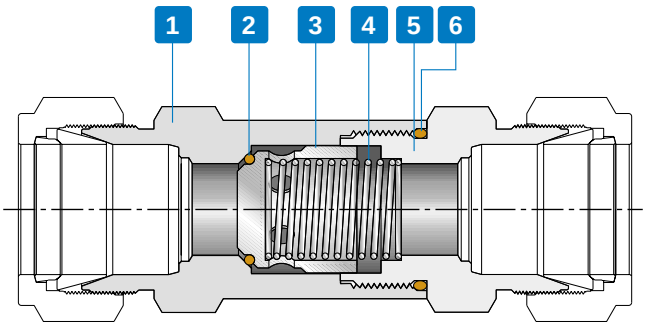

H400 SERIES

CRACKING PRESSURE

The differential pressure between **inlet and outlet**, at which an initial flow is passing through the valve.

RESEAL PRESSURE

The differential pressure between **outlet and inlet**, at which no flow is passing through the valve.

CRACKING AND RESEAL PRESSURE

Nominal Cracking Pressure psi (bar)	Cracking Pressure Range psi (bar)	Reseal Pressure psi (bar)	Reseal Pressure Up/Back Pressure
1/3 (0.02)	Up to 3 (0.02)	Up to 6 (0.40)	Back
1 (0.06)	Up to 4 (0.27)	Up to 6 (0.27)	Back
10 (0.68)	7 to 15 (0.48 to 1.0)	3 (0.2) or more	Up
25 (1.7)	20 to 30 (1.3 to 2.0)	17 (1.1) or more	Up

MAWP PRESSURE AT 21°C (70°F)

Size	Pressure	Brass	AISI 316
1/8 ,1/4, 6mm	psi	3000	3000
	bar	210	210
3/8, 1/2, 5/8, 10mm, 12mm	psi	3000	3000
	bar	210	210
3/4, 1", 16, 20, 22 mm	psi	1500	2000
	bar	102	140

H400 - DIMENSIONS

Catalog Number	Connection / Size Inlet	Connection / Size Outlet	Cv	A mm	A in	B mm	B in	C mm	C in	D mm	D in
H-400	1/8" LET-LOK®	1/8" LET-LOK®	0.1	56.0	2.20	25.3	1.00	15.88	5/8	11.11	7/16
H-400	1/4" LET-LOK®	1/4" LET-LOK®	0.47	60.5	2.38	25.0	0.98	15.88	5/8	14.28	9/16
H-400	6MM LET-LOK®	6MM LET-LOK®	0.47	60.5	2.38	25.0	0.98	15.88	5/8	14.00	
H-400	3/8" LET-LOK®	3/8" LET-LOK®	1.47	63.5	2.50	24.9	0.98	17.46	11/16	17.46	11/16
H-400	10MM LET-LOK®	10MM LET-LOK®	1.68	64.0	2.52	24.9	0.98	17.46	11/16	19.00	
H-400	1/2" LET-LOK®	1/2" LET-LOK®	1.68	77.0	3.03	32.6	1.28	23.8	15/16	22.23	7/8
H-400	12MM LET-LOK®	12MM LET-LOK®	1.68	77.0	3.03	32.8	1.28	23.8	15/16	22.00	
H-400	3/4" LET-LOK®	3/4" LET-LOK®	4.48	88.5	3.48	44.4	1.75	28.6	11/8	28.60	11/8
H-400	1" LET-LOK®	1" LET-LOK®	4.48	120	4.72	67.2	2.65	34.9	13/8	38.10	11/2
H-410	1/8" Female NPT	1/8" Female NPT	0.1	44.0	1.73	25.4	1.00	15.88	5/8		
H-410	1/4" Female NPT	1/4" Female NPT	0.47	52.5	2.07	28.0	1.10	19.05	3/4		
H-410	3/8" Female NPT	3/8" Female NPT	1.47	51.5	2.03	34.1	1.34	22.23	7/8		
H-410	1/2" Female NPT	1/2" Female NPT	1.68	76.5	3.01	43.4	1.71	28.6	11/8		
H-410	3/4" Female NPT	3/4" Female NPT	4.48	86.0	3.39	56.0	2.20	34.9	13/8		
H-410	1" Female NPT	1" Female NPT	4.48	107	4.21	73.0	2.87	41.28	15/8		
H-480	1/4" Female NPT	1/4" Male NPT	0.47	53.3	2.10	25.0	0.98	19.05	3/4		
H-485	1/4" Female NPT	1/4" Female NPT	0.47	53.7	2.11	27.3	1.07	19.05	3/4		

O-RINGS

Different materials are available for special applications.

O-ring Material	Temperature Rating °F (°C)
Buna N	-30 to 250 (-34 to 121)
Ethylene Propylene	-70 to 250 (-57 to 121)
Viton® (Fluorocarbon)	-15 to 400 (-26 to 204)
Kalrez®	-15 to 500 (-26 to 260)
Neoprene	-35 to 225 (-37 to 107)

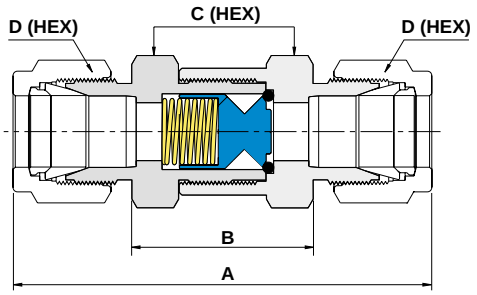

HAM-LET ADVANCED CONTROL TECHNOLOGY

H400 SERIES

CLEANING & PACKAGING

HAM-LET H400 valves are treated with HAM-LET Passivation, Cleaning and Packaging (Procedure 8075). HAM-LET H400 Valves with face seal end connections are treated with HAM-LET Oxygen Cleaning and Packaging (Procedure 8055). Oxygen cleaning and packaging for other end connections are available as an option.

TESTING

The H400 valve designs have been tested for Proof and Burst. Every H400 valve is factory tested for proper assembly, by leakage detection at 1000 psig (68 bar) for 10 seconds.
Every H400 valve is factory tested for functionality at the relevant cracking pressure, 5 cycles each.

H400 ORDERING INFORMATION

Your safety is important to us. Please ensure proper reference to our latest catalog.

Valve Description Example: H4 00 SS L 1/4 1/3 OPTIONAL

Valve Series

Valve Type

00 - LET-LOK® End Connection
10 - Female End Connection
80 - Male End Connection
85 - Male to Female End Connection

Material

SS - 316 St.St.
B - Brass

End Connection

L - LET-LOK® Tube Fitting
N - Threaded NPT
G - Threaded BSPP
R - Threaded BSPT
GL - Face Seal Male Connector
HL - ONE-LOK® Tube Fitting

Other end connections are available upon request.

End Connection Size

1/4	inch	6	mm
3/8	inch	8	mm
1/2	inch	10	mm
3/4	inch	12	mm
1	inch	25	mm

Cracking Pressure

1/3 psi
1 psi
10 psi
25 psi

O-Ring Material

BN - Buna N
EP - EPDM
NE - Neoprene
KZ - Kalrez®
***P** - PTFE

VI - Viton® (Standard)

Other seat material is available upon request.

* PTFE requires high back pressure to seal leaktight. PTFE seals are available up to 1/2" valves only

Treatments

OC - Oxygen Clean
LF - Lubricant Free

SPARE PARTS-KIT / REPAIR KIT

Spare-Parts Kit is available for each valve.
Spring kit includes: Spring, Label.
Seal kit includes: O-ring.
To order a Spare-Parts Kit, use the following format:

Z400 - ☐ – KIT – ☐ – ☐

Kit Designator: Spring, Seal

End Connection Size

Cracking Pressure (For spring kits): 1/3 psi, 1 psi, 10 psi, 25 psi

Seal Material (For seal kits): **BN** - Buna N, **EP** - EPDM, **NE** - Neoprene, **KZ** - Kalrez®, ***P** - PTFE, **VI** - Viton®

* PTFE requires high back pressure to seal leaktight.

Note: Check valves are designed and suitable for direct flow control only. These valves are not meant for pressure release.

Warning

Select the right component for safety's sake: The total design of the system must be taken into consideration when selecting components in order to ensure that your HAM-LET products provide safe, trouble-free operation. It is the responsibility of the system designer and the user to consider the compatibility of the materials, of the components and system, the function of the component, apprpriate ratings and to ensure proper installation, operation and maintenance.
Improper selection or use of products can cause property damage or personal injury, in respect of which the system designer and/or the user shall be solely liable and responsible.

⚠ **HAM-LET Check Valves should never be used as safety relief devices.**

HAM-LET ADVANCED CONTROL TECHNOLOGY

H400-HP FIXED CRACKING PRESSURE

FEATURES

- 316 St.St. construction
- High Pressure Characteristics (up to 6000 psi)
- Small Size
- Interchangeable Parts
- Variable Fixed Cracking Pressure
- HAM-LET LET-LOK®, Male & Female NPT, and HTC Face Seal Bead Ends

GENERAL

The H400-HP Series is a compact, robust and heavy duty design for high-pressure (up to 6000 psi) instumentation panels and systems, and provides an accurate operating point. H400-HP valves are normally closed.When the differential pressure between the inlet and the outlet is higher than the set pressure of the spring, the loaded poppet will move backwards and provide a free passage of flow through the valve.

H400-HP - MATERIALS

Item No.	Components	Qty.	Valve body material
1	Body	1	St.St. ASTM A-276
2	Poppet	1	Viton Bonded on 316 St.St.
3	Pusher	1	St.St. ASTM A-276
4	Spring	1	St.St. 304
5	O-ring	1	Viton®
6	Back Up	1	Viton®
7	End	1	St.St. ASTM A-276
8	Front Ferrule	1	St.St. ASTM A-276
9	Back Ferrule	2	St.St. ASTM A-276
10	Nut	2	St.St. ASTM A-276

TECHNICAL DATA

Connection Sizes	Max. Flow Coefficient (Cv)	Nominal Cracking Pressure psi (bar)	Downstream Pressure at 70ºF (20ºC) psi (bar)
1/8, 1/4, 6mm	0.67	1/3, 1, 5, 10 & 25 (0.02, 0.06, 0.34, 0.68, and 7.1)	6000 (413)
3/8, 1/2, 8-12 mm	1.80		
3/4, 1, 22mm, 25mm	4.7		5000 (344)

PRESSURE - TEMPERATURE RATING

Material Size	316SS 1/8, 1/4, 3/8, 1/2", 6,8,10,12mm	316SS 22&25mm , 3/4&1"
Temperature Fº (Cº)	Working Pressure, psi (bar)	
-10 (-23) to 100 (37)	6000 (413)	5000 (344)
200 (93)	5160 (355)	4290 (295)
250 (121)	4910 (338)	4080 (281)
300 (148)	4660 (321)	3875 (267)
400 (204)	4280 (295)	3560 (245)

Pressure estimates may be limited by the end connections.
(See Table of Dimensions on the next page).

CRACKING AND RESEAL PRESSURE

Nominal Cracking Pressure psi (bar)	Cracking Pressure Range psi (bar)	Reseal Pressure psi (bar)	Reseal Pressure Up/Back Pressure
1/3 (0.02)	Up to 3 (0.02)	Up to 5 (0.40)	Back
1 (0.06)	Up to 4 (0.27)	Up to 4 (0.27)	Back
5 (0.34)	3 to 9 (0.20 to 0.62)	Up tp 2 (0.13)	Back
10 (0.68)	7 to 15 (0.48 to 1.0)	3 (0.2) or more	Up
25 (1.7)	20 to 30 (1.3 to 2.0)	17 (1.1) or more	Up

CRACKING PRESSURE

The differential pressure between **inlet and outlet**, at which an **initial flow** is passing through the valve.

RESEAL PRESSURE

The differential pressure between **outlet and inlet**, at which **no flow** is passing through the valve.

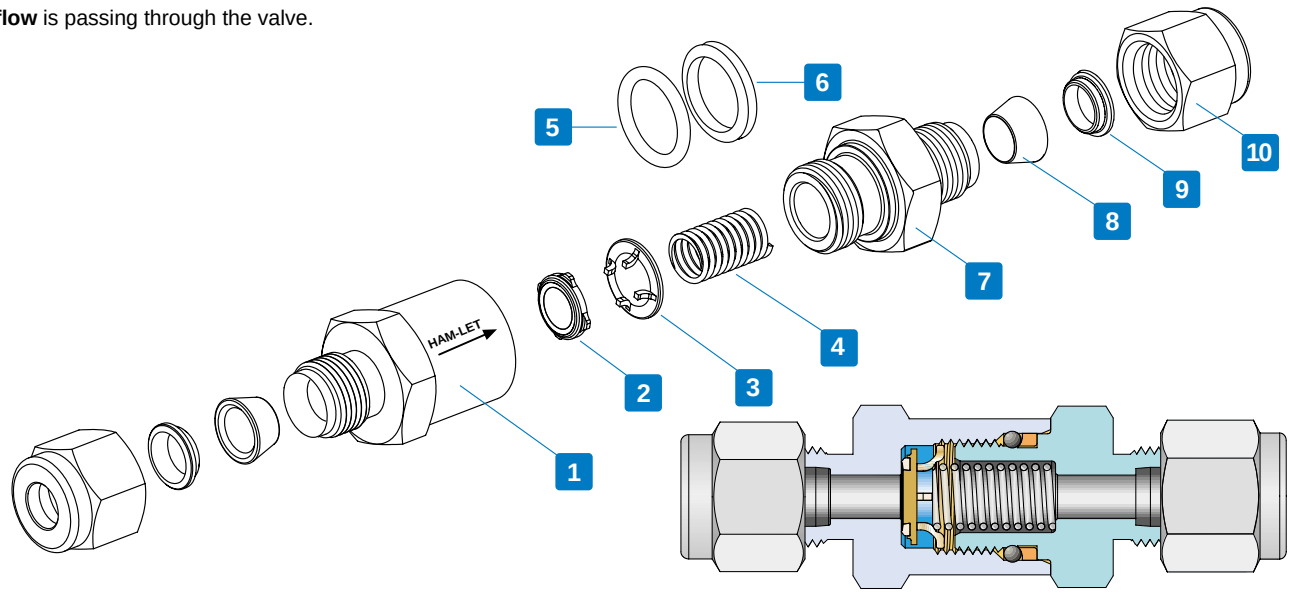

H400-HP FIXED CRACKING PRESSURE

CLEANING & PACKAGING

HAM-LET H400-HP valves are treated with HAM-LET Passivation, Cleaning and Packaging (Procedure 8075).

HAM-LET H400-HP Valves with face-seal end connections are treated with HAM-LET Oxygen Cleaning and Packaging (Procedure 8055). Oxygen Cleaning and Packaging for other end connections are available as an option.

TESTING

The H400-HP valve designs have been tested for Proof and Burst.

Every H400-HP valve is factory tested for proper assembly, by leakage detection at 1000 psig (68 bar) for 10 seconds. Every H400-HP valve is factory tested for functionality at the relevant cracking pressure, 5 cycles each.

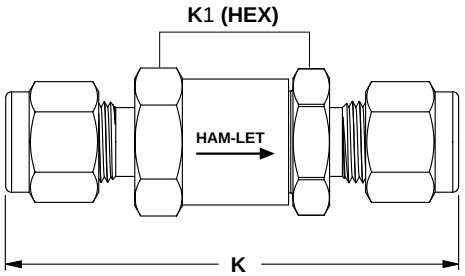

H400-HP - DIMENSIONS Basic Ordering Number H400-HP.

Inlet	Outlet	Pressure Ratig at 100F° / 37C°		Dimensions		
				K		K1
		psig	bar	mm	in	in
1/8" LET-LOK®	1/8" LET-LOK®	6000	413	57.8	2.28	11/16"
1/4" LET-LOK®	1/4" LET-LOK®			61.8	2.43	
3/8" LET-LOK®	3/8" LET-LOK®			70.0	2.76	1"
1/2" LET-LOK®	1/2" LET-LOK®			75.3	2.96	
3/4" LET-LOK®	3/4" LET-LOK®	5000	344	89.5	3.52	1 5/8"
1" LET-LOK®	1" LET-LOK®	4700	323	98.5	3.88	
6MM LET-LOK®	6MM LET-LOK®	6000	413	61.8	2.43	11/16"
8MM LET-LOK®	8MM LET-LOK®			68.5	2.70	1"
10MM LET-LOK®	10MM LET-LOK®			71.1	2.80	
12MM LET-LOK®	12MM LET-LOK®			75.3	2.96	
22MM LET-LOK®	22MM LET-LOK	5000	344	88.5	3.48	1 5/8"
25MM LET-LOK®	25MM LET-LOK®			98.5	3.88	
1/4" Female NPT	1/4" Female NPT	6000	413	54.1	2.13	11/16"
3/8" Female NPT	3/8" Female NPT	5000	344	64.8	2.55	1"
1/2" Female NPT	1/2" Female NPT	4600	316	77.0	3.03	1 1/16"
3/4" Female NPT	3/4" Female NPT	4300	296	82.0	3.23	1 5/8"
1" Female NPT	1" Female NPT	4100	282	97.3	3.83	
1/8" Male NPT	1/8" Male NPT	6000	413	45.6	1.80	11/16"
1/4" Male NPT	1/4" Male NPT			55.0	2.17	
3/8" Male NPT	3/8" Male NPT			60.0	2.36	1"
1/2" Male NPT	1/2" Male NPT			69.2	2.72	
3/4" Male NPT	3/4" Male NPT	5000	344	83.5	3.29	1 5/8"
1" Male NPT	1" Male NPT			93.3	3.67	
1/4" Female BSPT	1/4" Female BSPT	6000	413	58.0	2.28	11/16"
1/2" Female BSPT	1/2" Female BSPT	4600	316	83.5	3.29	1 1/16"
3/4" Female BSPT	3/4" Female BSPT	4300	296	90.1	3.55	1 5/8"
1" Female BSPT	1" Female BSPT	4100	282	97.4	3.83	
1/4" Male BSPT	1/4" Male BSPT	6000	413	55.0	2.17	11/16"
1/2" Male BSPT	1/2" Male BSPT			69.2	2.72	1"
3/4" Male BSPT	3/4" Male BSPT	5000	344	85.2	3.35	1 5/8"
1" Male BSPT	1" Male BSPT			93.3	3.67	
1/2" Female SAE/MS	1/2" Female SAE/MS	4600	316	69.5	2.74	1"
1/2" Male SAE/MS	1/2" Male SAE/MS	6000	413	63.0	2.48	
1/4" Male HO Fitting	1/4" Male HO Fitting			50.4	1.98	11/16"
1/2" Male HO Fitting	1/2" Male HO Fitting			59.8	2.35	1"
3/4" Male HO Fitting	3/4" Male HO Fitting	5000	344	73.6	2.90	1 5/8"
1" Male HO Fitting	1" Male HO Fitting					
1/4" Male Face Seal	1/4" Male Face Seal	6000	413	58.0	2.28	11/16"
1/2" Male Face Seal	1/2" Male Face Seal	3500	241	69.2	2.72	1"
3/4" Male Face Seal	3/4" Male Face Seal	3000	206	96.1	3.78	1 5/8"

Dimensions are for reference only and are subject to change.

H400-HP FIXED CRACKING PRESSURE

O-RINGS Different materials are available for special applications.

O-ring Material	Temperature Rating ºF (ºC)
Buna N	-30 to 250 (-34 to 121)
Ethylene Propylene	-70 to 250 (-57 to 121)
Viton® (Fluorocarbon)	-15 to 400 (-26 to 204)
Neoprene	-35 to 225 (-37 to 107)

H400-HP ORDERING INFORMATION Your safety is important to us. Please ensure proper reference to our latest catalog.

Valve Description Example: H4 00HP SS L 1/4 1/3 [ ] [ ]

OPTIONAL

Valve Series

Valve Type

- **00HP** - LET-LOK® End Connection
- **10HP** - Female End Connection
- **80HP** - Male End Connection

Other valve types available upon request.

Material

- **SS** - St.St.316

End Connection

- **L** - LET-LOK® Tube Fitting
- **N** - Threaded NPT
- **R** - Threaded BSPT
- **GL** - Metal Face Seal Male
- **HO** - O-ring Face Seal Male
- **HL** - ONE-LOK®
- **OB** - SAE/MS

Other end connections are available upon request

End Connection Size

1/8	inch	6	mm
1/4	inch	8	mm
3/8	inch	10	mm
1/2	inch	12	mm
3/4	inch	22	mm
1	inch	25	mm

Cracking Pressure

- 1/3 psi
- 1 psi
- 5 psi
- 10 psi
- 25 psi

Other cracking pressures are available upon request

Seal Material

- **BU** - Buna-N
- **EP** - EPDM
- **NE** - Neoprene

Viton® Seals are standard .
For other seal material add the correct designator to the basic ordering number.

Treatments

- **OC** - Oxygen Clean service
- **LF** - Lubricant Free

Note: Check valves are designed and suitable for direct flow control only. These valves are not meant for pressure release.

ORDERING INFORMATION SPARE-PARTS KIT / REPAIR KIT

Spare-parts Kit is available for each valve.
Spring kit includes: Spring, Label.
Seal kit includes: O-ring, Back-up, Bonded poppet.
To order a Spare-Parts Kit, use the following format:

Z400-HP - [ ] **– KIT –** [ ] **–** [ ]

Kit Designator
- Spring
- Seal

End Connection Size

Cracking Pressure (For spring kits)
- 1/3 psi
- 1 psi
- 5 psi
- 10 psi
- 25 psi

Seal Material (For seal kits)
- **BN** - Buna N
- **EP** - EPDM
- **NE** - Neoprene
- **P** - PTFE
- **VI** - Viton®

Warning

Select the right component for safety's sake: The total design of the system must be taken into consideration when selecting components in order to ensure that your HAM-LET products provide safe, trouble-free operation. It is the responsibility of the system designer and the user to consider the compatibility of the materials, of the components and system, the function of the component, appropriate ratings and to ensure proper installation, operation and maintenance.
Improper selection or use of products can cause property damage or personal injury, in respect of which the system designer and/or the user shall be solely liable and responsible.

⚠ **HAM-LET Check Valves should never be used as safety relief devices.**

HAM-LET ADVANCED CONTROL TECHNOLOGY

H400-A ADJUSTABLE CRACKING PRESSURE

FEATURES

- 316 St.St. or Brass Construction
- Interchangeable Parts
- Variable Adjustable Cracking Pressure Ranges
- Pressure Characteristics: up to 3000 psi
- HAM-LET LET-LOK® Fittings, Male NPT, and HTC® Face Seal Bead

GENERAL

The H400-A Series is a compact design for moderate-pressure (up to 3000 psi) instrumentation panels and systems, and provides an accurate and adjustable operating point. H400-A valves are normally closed. When the differential pressure between the inlet and the outlet is higher than the set pressure of the spring, the loaded poppet will move backwards and provide a free passage for flow through the valve.

H400-A - MATERIALS

Item No.		Components	Qty.	Valve Body Material	
				316 St.St.	Brass
1		Gasket	1	316 St.St. Silver plated	Al-6061 Silver plated
2		O-ring Holder	1	St.St. ASTM A-276	Brass ASTM B-16
3		O-ring	1	Viton® (Fluorocarbon)	
4		Poppet	1	St.St. ASTM A-276	Brass ASTM B-16
5		Body	1	St.St. ASTM A-276	Brass ASTM B-16
6		Spring	1	St.St. 302	
7		Adjusting Screw	1	St.St. 304	
8		Lock Screw	1	St.St. 304	
9		Gasket	1	316 St.St. Silver plated	Al-6061 Silver plated
10		End	2	St.St. ASTM A-276	Brass ASTM B-16
11	A	Front Ferrule	2	St.St. ASTM A-276	Brass ASTM B-16
	B	Back Ferrule	2	St.St. ASTM A-276	Brass ASTM B-16
	C	Nut	2	St.St. ASTM A-276	Brass ASTM B-16

PRESSURE - TEMPERATURE RATING

Material	316St.St.	Brass
Temperature F° (C°)	Working Pressure, psig (bar)	
-10 (-23) to 100 (37)	3000 (206)	3000 (206)
200 (93)	2575 (177)	2600 (179)
250 (121)	2450 (168)	2405 (165)
300 (148)	2325 (160)	-
375 (190)	2185 (150)	-

CRACKING PRESSURE

The differential pressure between **inlet and outlet**, at which an **initial flow** is passing through the valve.

RESEAL PRESSURE

The differential pressure between **outlet and inlet**, at which **no flow** is passing through the valve.

CRACKING AND RESEAL PRESSURE

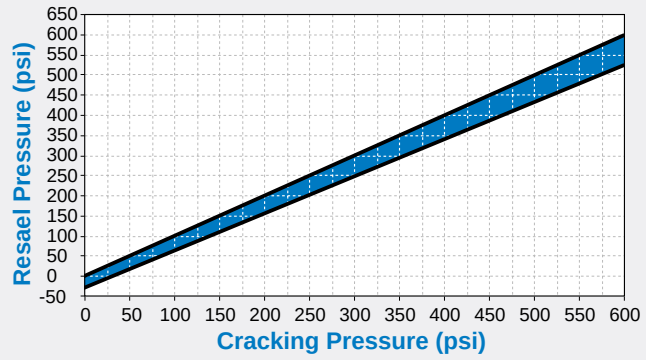

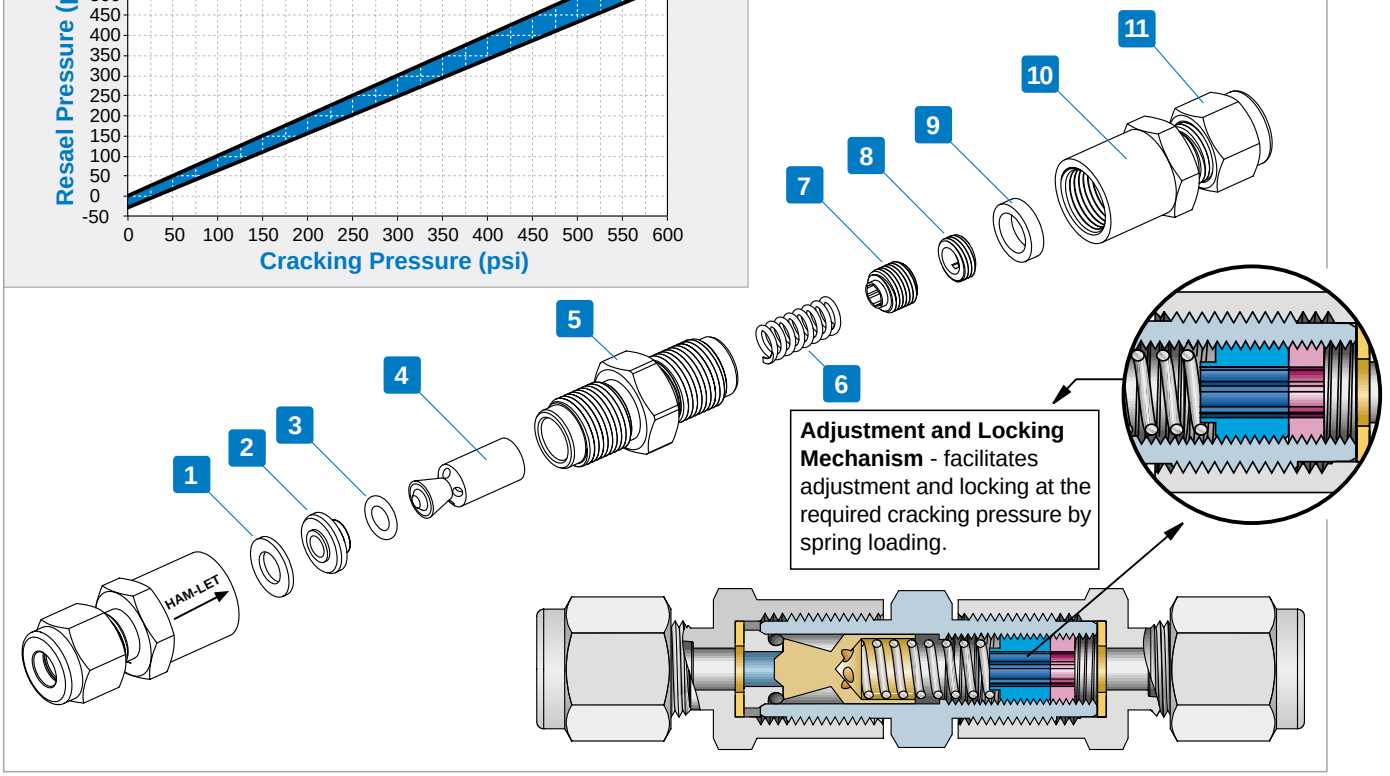

HAM-LET ADVANCED CONTROL TECHNOLOGY

H400-A ADJUSTABLE CRACKING PRESSURE

CLEANING & PACKAGING

HAM-LET H400-A valves are treated with HAM-LET Passivation, Cleaning and Packaging (Procedure 8075).
HAM-LET H400-A valves with face-seal end connections are treated with Ham-Let Oxygen Cleaning and Packaging (Procedure 8055). Oxygen cleaning and packaging for other end connections are available as an option.

TESTING

The H400-A valve designs have been tested for Proof and Burst.
Every H400-A valve is factory tested for proper assembly, by leak detection at 1000 psig (68 bar) for 10 seconds.
Every H400-A valve is factory tested for functionality at the relevant cracking pressure, 5 cycles each.

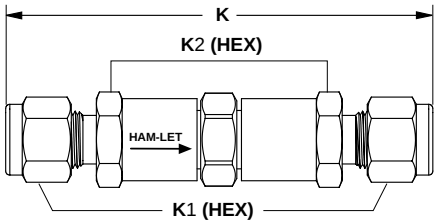

DIMENSIONS* Basic Ordering Number H400-A

Inlet	Outlet	Dimensions K mm	K in	K1 Hex	K2 Hex
1/4"	1/4"	82.5	3.25	9/16	5/8
6 MM	6 MM	82.5	3.25	14.0 MM	5/8
8 MM	8 MM	84.4	3.32	16.0 MM	5/8
1/4" Male NPT	1/4" LET-LOK®	79.3	3.12	9/16	5/8
1/4" Male Face Seal	1/4" Male Face Seal	78.4	3.09	-	5/8

TECHNICAL DATA

Connection Sizes	Max. Flow Coefficient (Cv)	Nominal Cracking Pressure psi (bar)	Downstream Pressure at 70ºF (20ºC) psi (bar)
1/4, 6mm, 8mm	0.37	3 to 50 (0.2 to 3.4) 50 to 150 (3.4 to 10.3) 150 to 350 (10.3 to 24.1) 350 to 600 (24.1 to 41.3)	3000 (413)

O-RINGS Different materials are available for special applications.

O-ring Material	Temperature Rating ºF (ºC)
Buna N	-30 to 250 (-34 to 121)
Ethylene Propylene	-70 to 250 (-57 to 121)
Viton® (Fluorocarbon)	-15 to 400 (-26 to 204)
Kalrez®	-15 to 500 (-26 to 260)
Neoprene	-35 to 225 (-37 to 107)

H400-A ORDERING INFORMATION Your safety is important to us. Please ensure proper reference to our latest catalog.

Valve Description Example: H4 00A SS L 1/4 3

Valve Series

Valve Type

00A - LET-LOK® End Connection
80A - Male End Connection

For other valve types please consult HAM-LET.

Material

SS - 316 St.St.
B - Brass

Cracking Pressure

Designator	Values (psi)
3	3-50
50	50-150
150	150-350
350	350-600

End Connection Size

1/4 inch
6 mm
8 mm

End Connection

L - LET-LOK® Tube Fitting
N - Threaded NPT
GL - Face Seal Male Connector
HL - ONE-LOK®

Other end connections are available upon request.

OPTIONAL

O-Ring Material

EP - EPDM
NE - Neoprene
KZ - Kalrez®
P - PTFE

PTFE requires high back-pressure for leak-tight sealing.

Viton® O-rings are standard for St.St. body construction.

Tretments

OC - Oxygen Clean
LF - Lubrucant Free

Note: Check valves are designed and suitable for direct flow control only. These valves are not meant for pressure release.

REPAIR KIT

Please see H400-OPA Ordering information.

Warning

Select the right component for safety's sake: The total design of the system must be taken into consideration when selecting components in order to ensure that your HAM-LET products provide safe, trouble-free operation. It is the responsibility of the system designer and the user to consider the compatibility of the materials, of the components and system, the function of the component, appropriate ratings and to ensure proper installation, operation and maintenance.
Improper selection or use of products can cause property damage or personal injury, in respect of which the system designer and/or the user shall be solely liable and responsible.

⚠ **HAM-LET Check Valves should never be used as safety relief devices.**

*Dimensions are for reference only, and are subject to change

H400-OPA ONE-PIECE ADJUSTABLE CRACKING PRESSURE

FEATURES

- One-piece Body
- 316 St.St. or Brass Construction
- Repair Kits
- Variable Adjustable Cracking Pressure Ranges
- Pressure Characteristics: up to 3000 psi
- HAM-LET Male & Female NPT, Male BSPT

GENERAL

The H400-OPA Series is a compact one-piece design for moderate-pressure (up to 3000 psi) instrumentation panels and systems, and provides an accurate and adjustable operating point. H400-OPA valves are normally closed. When the differential pressure between the inlet and the outlet is higher than the set pressure of the spring, the loaded poppet will move backwards and provide a free passage for flow through the valve.

H400-OPA - MATERIALS

Item No.	Components	Qty.	Valve Body Material	
			316 St.St.	Brass
1	Inlet lock Screw	1	St.St. 304	Brass ASTM B-16
2	O-ring Holder	1	St.St. ASTM A-276	Brass ASTM B-16
3	O-ring	1	Viton® (Fluorocarbon)	
4	Poppet	1	St.St. ASTM A-276	Brass ASTM B-16
5	Body	1	St.St. ASTM A-276	Brass ASTM B-16
6	Spring	1	St.St. 302	
7	Adjusting Screw	1	St.St. 304	
8	Lock Screw	1	St.St. 304	

PRESSURE - TEMPERATURE RATING

Material	316St.St.	BRASS
Temperature F° (C°)	Working Pressure, psig (bar)	
-10 (-23) to 100 (37)	3000 (206)	3000 (206)
200 (93)	2575 (177)	2600 (179)
250 (121)	2450 (168)	2405 (165)
300 (148)	2325 (160)	-
375 (190)	2185 (150)	-

CRACKING AND RESEAL PRESSURE

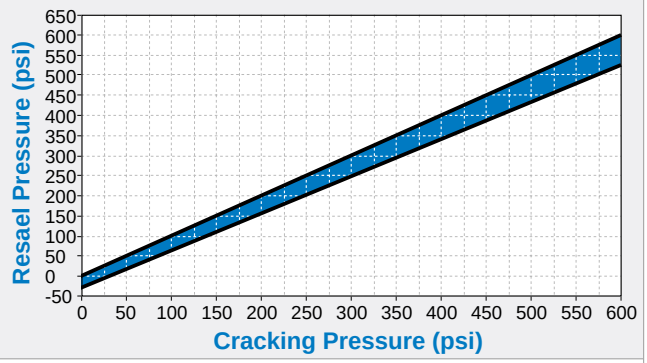

CRACKING PRESSURE

The differential pressure between **inlet and outlet**, at which an **initial flow** is passing through the valve.

RESEAL PRESSURE

The differential pressure between **outlet and inlet**, at which **no flow** is passing through the valve.

CLEANING & PACKAGING

HAM-LET H400-OPA valves are treated with HAM-LET Passivation, Cleaning and Packaging (Procedure 8075).

HAM-LET H400-OPA Valves with face-seal end connections are treated with HAM-LET Oxygen Cleaning and Packaging (Procedure 8055). Oxygen Cleaning and Packaging for other end connections are available as an option.

TESTING

The H400-OPA valve designs have been tested for Proof and Burst.

Every H400-OPA valve is factory tested for proper assembly, by leakage detection at 1000 psig (68 bar) for 10 seconds.

Every H400-OPA valve is factory tested for functionality at the relevant cracking pressure, 5 cycles each.

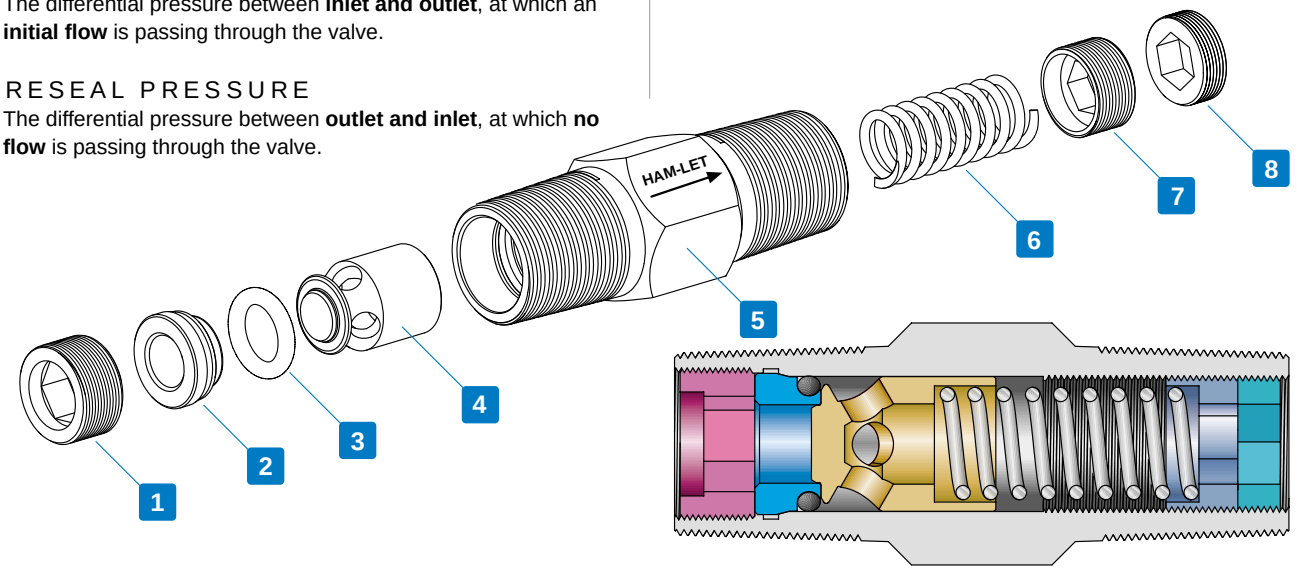

HAM-LET ADVANCED CONTROL TECHNOLOGY

H400-OPA ONE-PIECE ADJUSTABLE CRACKING PRESSURE

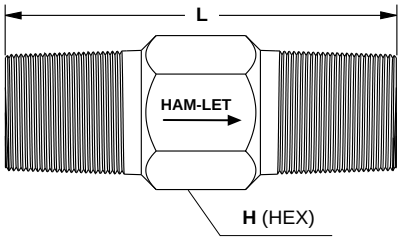

DIMENSIONS* Basic Ordering Number H400-OPA.

End Connection	Size	Dimensions		
		L		H
	Inlet / Outlet	mm	in	in
Female NPT	1/4"	75.5	2.97	3/4
Male NPT	1/4"	41	1.61	9/16
	1/2"	65	2.55	7/8
Male BSPT	1/4"	41	1.61	9/16
	1/2"	65	2.55	7/8

O-RINGS Different materials are available for special applications.

O-Ring Material	Temperature Rating ºF (ºC)
Buna N	-30 to 250 (-34 to 121)
Ethylene Propylene	-70 to 250 (-57 to 121)
Viton® (Fluorocarbon)	-15 to 400 (-26 to 204)
Kalrez®	-15 to 500 (-26 to 260)
Neoprene	-35 to 225 (-37 to 107)

TECHNICAL DATA

Connection Sizes	Max. Flow Coefficient (Cv)	Nominal Cracking Pressure psi (bar)	Downstream Pressure at 70ºf (20ºc) psi (bar)
1/4	0.35	3 to 50 (0.2 to 3.4) 50 to 150 (3.4 to 10.3)	3000 (207)
1/2	1.20	150 to 350 (10.3 to 24.1) 350 to 600 (24.1 to 41.3)	

H400-OPA ORDERING INFORMATION Your safety is important to us. Please ensure proper reference to our latest catalog.

Valve Description Example: **H4 00-OPA SS N 1/4 3**

Valve Series

Valve Type

10 - Female End Connection
80 - Male End Connection

For other valve types, please consult HAM-LET.

Material

SS - 316 St.St.
B - Brass

End Connection

N - Threaded NPT
R - Threaded BSPT

For other end connections, Please consult HAM-LET.

End Connection Size

1/4"
1/2"

Cracking Pressure

Designator	Values (psi)
3	3-50
50	50-150
150	150-350
350	350-600

OPTIONAL

O-Ring Material

EP - EPDM
NE - Neoprene
KZ - Kalrez®
P - PTFE

PTFE requires high back pressure for leak tight sealing

Viton® O-rings are standard for St.St. body construction.

Treatments

OC - Oxygen Clean
LF - Lubricant Free

Note: Check valves are designed and suitable for direct flow control only. These valves are not meant for pressure release.

SPARE-PARTS KIT / REPAIR KIT ORDERING INFORMATION

Spare-Parts Kit is available for each valve.
Spring kit includes: Spring, Label.
Seal kit includes: O-ring.
To order a Spare-Parts Kit, use the following format:

Z400 - ☐ – ☐ – KIT – ☐ – ☐

Series: A, OPA

Kit Designator: Spring, Seal

End Connection Size

Cracking Pressure (For spring kits): 3-50 psi, 50-150 psi, 150-350 psi, 350-600 psi

Seal Material (For seal kits):
BN - Buna N
EP - EPDM
NE - Neoprene
***P** - PTFE
KZ - Kalrez®
VI - Viton®

*PTFE requires high back pressure for leak tight sealing

Warning

Select the right component for safety's sake: The total design of the system must be taken into consideration when selecting components in order to ensure that your HAM-LET products provide safe, trouble-free operation. It is the responsibility of the system designer and the user to consider the compatibility of the materials, of the components and system, the function of the component, appropriate ratings and to ensure proper installation, operation and maintenance.Improper selection or use of products can cause property damage or personal injury, in respect of which the system designer and/or the user shall be solely liable and responsible.

⚠ **HAM-LET Check Valves should never be used as safety relief devices.**

* Dimensions are for reference only, and are subject to change.

HAM-LET ADVANCED CONTROL TECHNOLOGY

H400-OP ONE-PIECE FIXED CRACKING PRESSURE

FEATURES

- One-piece Body
- 316 St.St. or Brass Construction
- Interchangeable Parts
- Variable Adjustable Cracking Pressure
- Pressure Characteristics: up to 3000 psi
- HAM-LET Male & Female NPT, Male & Female BSPT

GENERAL

The H400-OP Series is a compact one-piece design for moderate-pressure (up to 3000 psi) instrumentation panels and systems, and Provides an accurate operating point. H400-OP valves are normally closed. When the differential pressure between the inlet and the outlet is higher than the set pressure of the spring, the loaded poppet will move backwards and provide a free passage for flow through the valve.

H400-OP - MATERIALS

Item No.	Components	Qty.	Valve Body Material	
			316 St.St.	Brass
1	Lock Screw	1	St.St. 304	Brass ASTM B-16
2	O-ring Holder	1	St.St. ASTM A-276	
3	O-ring	1	Viton® (Fluorocarbon)	
4	Poppet	1	St.St. ASTM A-276	Brass ASTM B-16
5	Spring	1	St.St. 302	
6	Body	1	St.St. ASTM A-276	Brass ASTM B-16

CRACKING AND RESEAL PRESSURE

Nominal Cracking Pressure psi (bar)	Cracking Pressure Range psi (bar)	Reseal Pressure	
		psi (bar)	Up/Back Pressure
1/3 (0.02)	Up to 3 (0.02)	6 to 20 (0.41 to 1.3)	Back
1 (0.06)	Up to 4 (0.27)	5 to 20 (0.34 to 1.3)	Back
5 (0.34)	7 to 13 (0.48 to 0.89)	3 to 10 (0.2 to 0.68)	Back
10 (0.68)	21 to 29 (1.4 to 1.9)	5 (0.34) or more	Up
25 (1.7)			Up

CRACKING PRESSURE

The differential pressure between **inlet and outlet**, at which an **initial flow** is passing through the valve.

RESEAL PRESSURE

The differential pressure between **outlet and inlet**, at which **no flow** is passing through the valve.

PRESSURE - TEMPERATURE RATING

Material	316St.St.	Brass
Temperature F° (C°)	Working Pressure, psig (bar)	
-10 (-23) to 100 (37)	3000 (206)	3000 (206)
200 (93)	2575 (177)	2600 (179)
250 (121)	2450 (168)	2405 (165)
300 (148)	2325 (160)	-
375 (190)	2185 (150)	-

TECHNICAL DATA

Connection Sizes	Max. Flow Coefficient (Cv)	Nominal Cracking Pressure psi (bar)	Downstream Pressure at 70°F (20°C) psi (bar)
1/4	0.35	1/3, 1,10 & 25 (0.02, 0.06, 0.68, and 7.1)	3000 (207)
1/2	1.20		

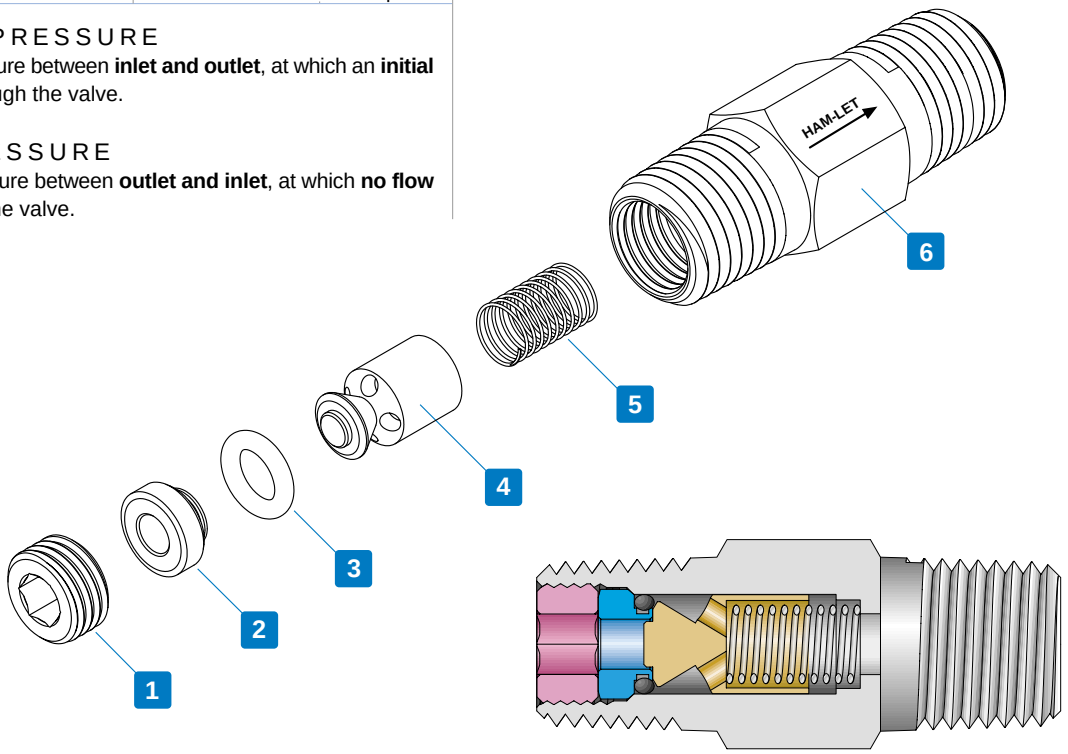

HAM-LET ADVANCED CONTROL TECHNOLOGY

H400-OP ONE-PIECE FIXED CRACKING PRESSURE

CLEANING & PACKAGING

HAM-LET H400-OP valves are treated with HAM-LET Passivation, Cleaning and Packaging (Procedure 8075).
HAM-LET H400-OP valve with face-seal end connections are treated with HAM-LET Oxygen Cleaning and Packaging (Procedure 8055). Oxygen Cleaning and Packaging for other end connections are available as an option.

TESTING

The H400-OP Valve designs have been tested for Proof and Burst.
Every H400-OP Valve is factory tested for proper assembly, by leakage detection at 100 psig (6.8bar) for 10 seconds.
Every H400-OP Valve is factory tested for functionality at the relevant cracking pressure, 5 cycles each.

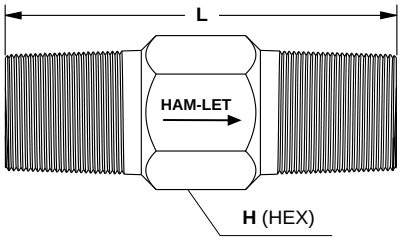

DIMENSIONS* Basic Ordering Number H400-OP

End Connection	Size	Dimensions		
		L		H
Inlet / Outlet		mm	in	in
Female NPT	1/4"	61.0	2.4	3/4
	1/2"	94.0	3.7	11/16
Male NPT	1/4"	41.0	1.61	9/16
	1/2"	58.0	2.28	7/8
Female / Male NPT	1/4"	58.0	2.28	3/4
Male / Female NPT	1/4"	44.5	1.75	3/4
	1/2"	72.0	2.83	11/16
Female BSPT	1/4"	64.5	2.54	3/4
Male BSPT	1/2"	41.0	1.61	9/16

O-RINGS Different materials are available for special applications.

O-ring Material	Temperature Rating ºF (ºC)
Buna N	-30 to 250 (-34 to 121)
Ethylene Propylene	-70 to 250 (-57 to 121)
Viton® (Fluorocarbon)	-15 to 400 (-26 to 204)
Kalrez®	-15 to 500 (-26 to 260)
Neoprene	-35 to 225 (-37 to 107)

H400-OP ORDERING INFORMATION Your safety is important to us. Please ensure proper reference to our latest catalog.

Valve Description Example: H4 00-OP SS N 1/4 1/3

Valve Series

Valve Type
- **10** - Female End Connection
- **80** - Male End Connection

For other valve types, please consult HAM-LET.

Material
- **SS** - 316 St.St.
- **B** - Brass

Note: Check valves are designed and suitable for direct flow control only. These valves are not meant for pressure release.

End Connection Size
- 1/4"
- 1/2"

End Connection
- **N** - Threaded NPT
- **R** - Threaded BSPT

For other end connections, please consult HAM-LET.

Cracking Pressure
- 1/3 psi
- 1 psi
- 10 psi
- 25 psi

Other cracking pressures are available upon request.

OPTIONAL

O-Ring Material
- **BN** - Buna N
- **EP** - EPDM, EPM
- **NE** - Neoprene
- **KZ** - Kalrez®
- **P** - PTFE

PTFE requires high back pressure for leak tight sealing

Viton® O-rings are standard for St.St. body construction.

Tretments
- **OC** - Oxygen Clean
- **LF** - Lubrucant Free

ORDERING INFORMATION SPARE-PARTS KIT / REPAIR KIT

Spare-Parts Kit is available for each valve.
Spring kit includes: Spring, Label.Seal kit includes: O-ring.
To order a Spare-Parts Kit, use the following format:

Z400-OP – ☐ – KIT – ☐ – ☐

- **Kit Designator**: Spring Seal
- **End Connection Size**
- **Cracking Pressure**: 1/3 psi, 1 psi, 10 psi, 25 psi — For spring kits
- **Seal Material**: **BN** - Buna N, **EP** - EPDM, **NE** - Neoprene, ***P** - PTFE, **KZ** - Kalrez®, **VI** - Viton® — For seal kits

* PTFE requires high back pressure for leak tight sealing

Warning

Select the right component for safety's sake: The total design of the system must be taken into consideration when selecting components in order to ensure that your HAM-LET products provide safe, trouble-free operation. It is the responsibility of the system designer and the user to consider the compatibility of the materials, of the components and system, the function of the component, appropriate ratings and to ensure proper installation, operation and maintenance.Improper selection or use of products can cause property damage or personal injury, in respect of which the system designer and/or the user shall be solely liable and responsible.

⚠ **HAM-LET Check Valves should never be used as safety relief devices.**

* Dimensions are for reference only, and are subject to change.

HAM-LET ADVANCED CONTROL TECHNOLOGY

APPENDIX 6 HB Systems – Electrical Control Panel

(Left blank intentionally)

Customer:	DIVEX OCEANICS DAWN ROAD CAPE TOWN
Project:	FRESH WATER SKID, PWS
Supplier:	HB SYSTEMS (PTY)LTD DYNAGEL STREET SOMERSET WEST Tel: 021 852 1189 Fax: 021 852 1192 Email: support@hbsystems.co.za

Technical Data

Degree of Protection:	IP55
Form of Construction:	FORM1
Rated Voltage / Freq:	440V 60Hz
Rated Current :	45A
Short Circuit Current:	10KA
Auxiliary Voltage:	230VAC
Control Voltage:	24VDC
System Configuration:	IT
IEC / SANS:	-

Remarks:

POWER WIRING

PHASE 1	L1: BROWN	
PHASE 2	L2: BLACK	
PHASE 3	L3: GREY	
NEUTRAL	N : BLUE	
EARTH	PE: GRN/YELL	

CONTROL VOLTAGE WIRING

NON-EARTHED		
230VAC-V	BROWN	0.75 to 1.5 mm²
230VAC-0	BROWN	0.75 to 1.5 mm²
EARTHED		
230VAC-V	BROWN	0.75 to 1.5 mm²
230VAC-0	BLUE	0.75 to 1.5 mm²
NON-EARTHED		
110VAC-V	BLACK	0.75 to 1.5 mm²
110VAC-V	BLACK	0.75 to 1.5 mm²
EARTHED		
110VAC-V	BLACK	**0.75 to 1.5 mm²**
110VAC-0	BLUE	0.75 to 1.5 mm²
NON-EARTHED		
+24VDC	BROWN	0.75 to 1.5 mm²
0VDC	GREY	0.75 to 1.5 mm²
EARTHED		
+24VDC	BROWN	0.75 to 1.5 mm²
0VDC	BLUE	0.75 to 1.5 mm²

CONTROL WIRING

PLC In	VIOLET	0.75 mm²
PLC Out	ORANGE	0.75 mm²
Other	WHITE	0.75 to 1.5 mm²

WIRE NUMBERS = TERMINAL NUMBERS

Drawing Standard:
IEC/EN/ DIN61346

Rev	Comment	Date	Name
REV-4	ADD CONTR CB	07.02.08	HB
REV-3	AS BUILT	29.01.08	HB

Date	4.10.2007
Drawn	HB
Rev.	REV-0
Comm.	DESIGN

FRESH WATER SKID, PWS
DIVEX OCEANICS
DAWN ROAD
CAPE TOWN

This document is the property of HBSystems(Pty)Ltd

HBSystems
Electrical Engineering & Automation

FRESH WATER SKID, PWS

PROJ REF.	=
NP	+
DRAWING NO.	Sheet 1
HBN221D	of 1 Sh

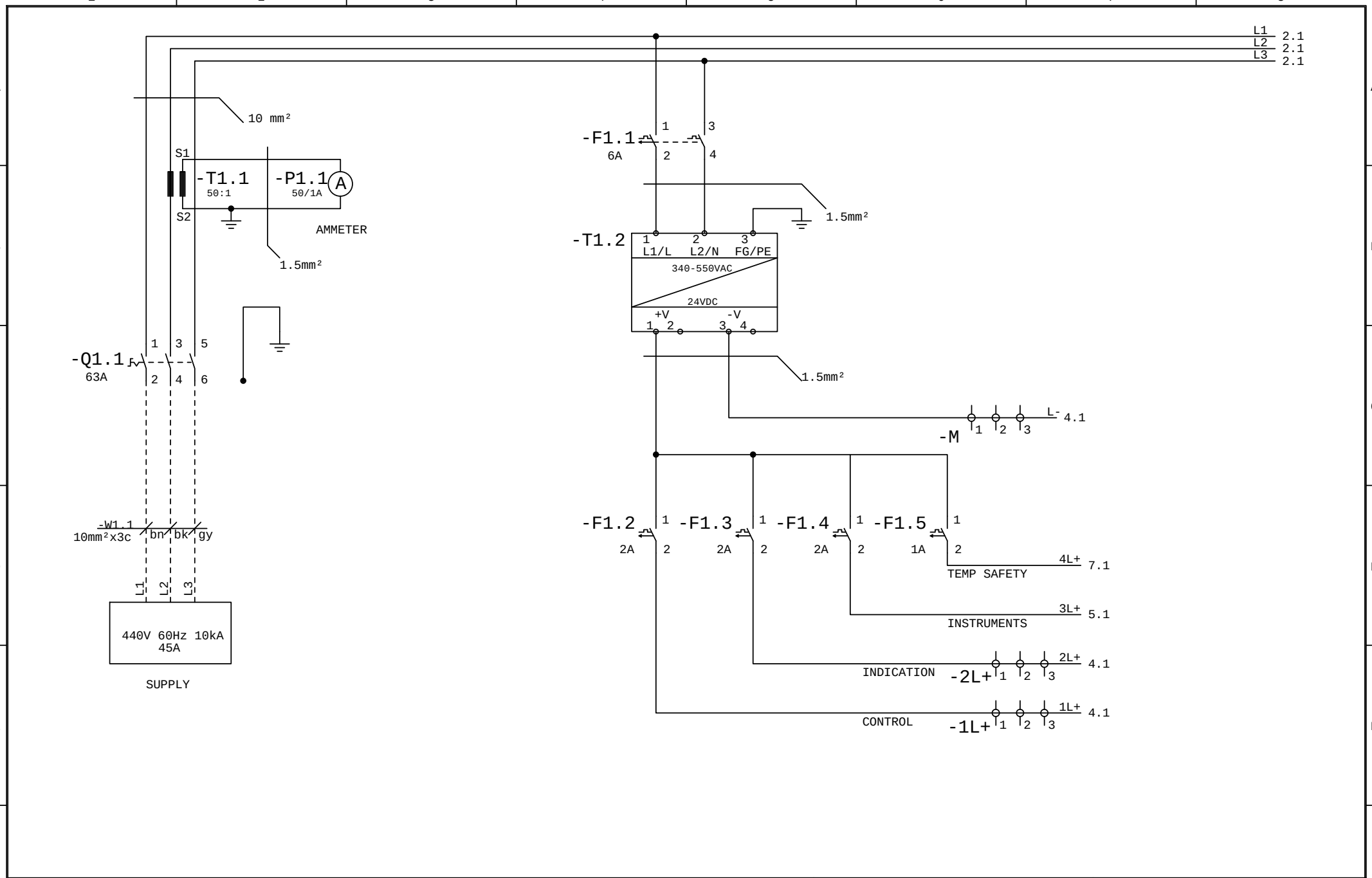

Rev	Comment	Date	Name	Comm.	DESIGN
REV-4	ADD CONTR CB	07.02.08	HB	Date	4.10.2007
REV-3	AS BUILT	29.01.08	HB	Drawn	HB
REV-2	UPDATE	30.10.07	HB	Rev.	REV-0

FRESH WATER SKID, PWS
DIVEX OCEANICS
DAWN ROAD
CAPE TOWN

This document is the property of HBSystems(Pty)Ltd

HBSystems
Electrical Engineering & Automation

POWER SUPPLY

FRESH WATER SKID, PWS

PROJ REF. NP
=
+

DRAWING NO. HBN221S

Sheet 1 of 11 Sh

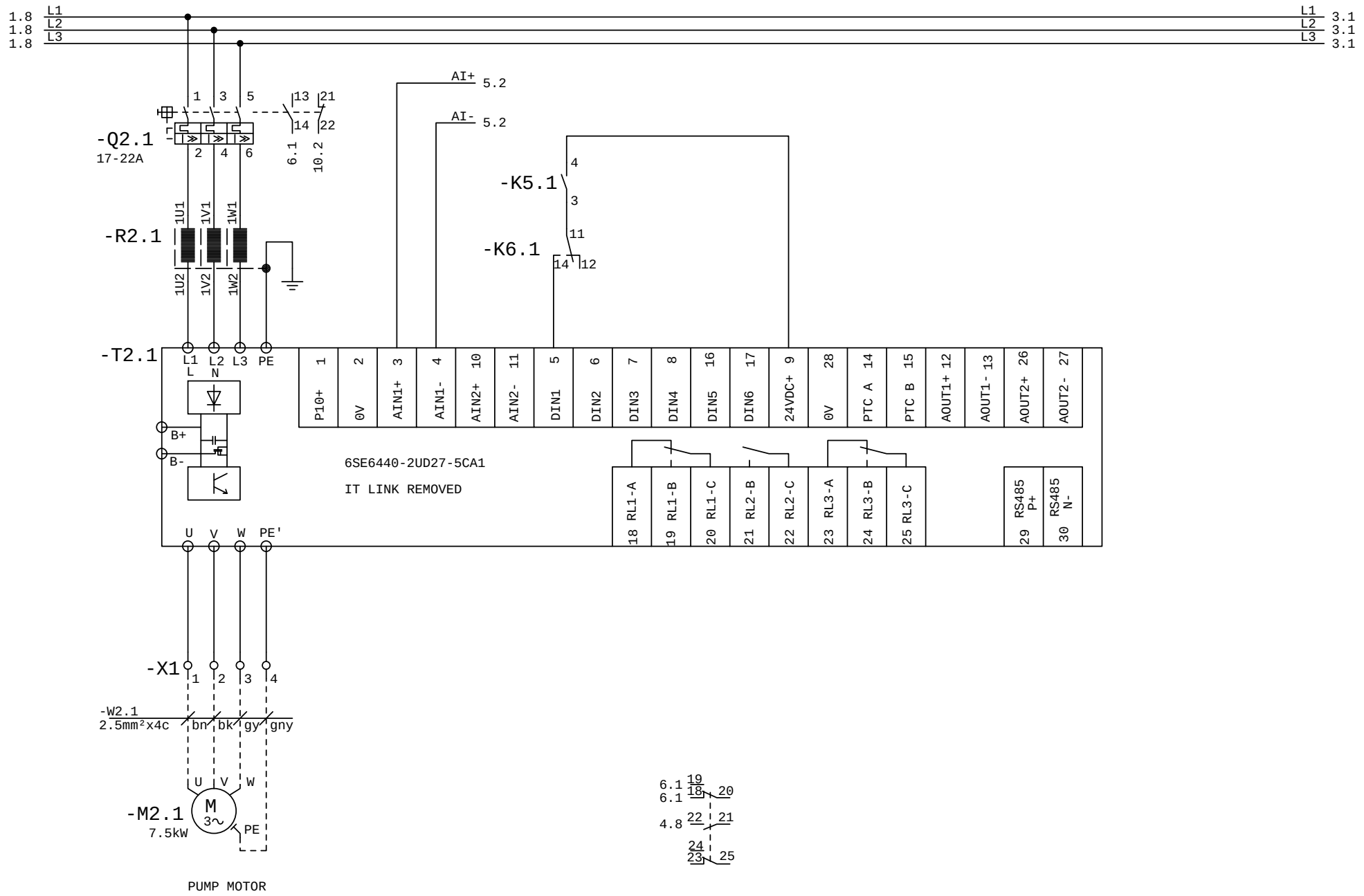

Rev	Comment	Date	Name	Comm.	DESIGN
REV-4	ADD CONTR CB	07.02.08	HB	Date	4.10.2007
REV-3	AS BUILT	29.01.08	HB	Drawn	HB
REV-2	UPDATE	30.10.07	HB	Rev.	REV-0

FRESH WATER SKID, PWS
DIVEX OCEANICS
DAWN ROAD
CAPE TOWN

This document is the property of HBSystems(Pty)Ltd

HBSystems
Electrical Engineering & Automation

PUMP DRIVE

FRESH WATER SKID, PWS

PROJ REF. NP
=
+

DRAWING NO. HBN221S

Sheet 2 of 11 Sh

DRIVE PARAMETERS CHANGED FROM DEFAULT
MOTOR PARAMETERS TO BE CHANGED IN COMMISSIONING MODE (P10 = 1)

ALL PARAMETERS INDEX 0 (WHERE APPLICABLE)

P	3	=	3 ACCESS PARAMETER
P	100	=	2 FREQ = 60HZ, POWER = KW
P	210	=	440 SYSTEM VOLTAGE
P	295	=	1800 FAN DELAY OFF 30 M
P	307	=	. MOTOR POWER KW
P	308	=	. MOTOR POWER FACTOR
P	310	=	. MOTOR FREQUENCY
P	311	=	. MOTOR SPEED RPM
P	314	=	. MOTOR SPEED RPM
P	701	=	1 DIN1 TERMINAL 1
P	702	=	99 DIN2 TERMINAL 2
P	732	=	52.2 OUTPUT 2 RUNNING
P	756	=	2 SET AI 1 TO mA
P	757	=	4 AI 1 4mA
P	758	=	42 AI 1 %
P	1000	=	2 ANALOG INPUT
P	1060	=	8 RAMP 2 UP S
P	1061	=	8 RAMP 2 DOWN S
P	1070	=	0 NO MAIN SETPOINT
P	1074	=	722.1 DISABLE CONTROL SETPOINT
P	1075	=	755.0 ANALOG INPUT 1
P	1080	=	25 MIN FREQ
P	1082	=	60 MAX FREQ
P	1120	=	15 RAMP 1 UP S
P	1121	=	15 RAMP 1 DOWN S
P	1124	=	722.1 CHANGE RAMP TIMES
P	2000	=	60 REFERENCE
P	13	=	754 SETPOINT VALUE FROM CONTROLLER
P	11	=	1111 LOCK CODE
P	12	=	1111 KEY UNLOCK

Rev	Comment	Date	Name	Comm.	DESIGN
REV-4	ADD CONTR CB	07.02.08	HB	Date	4.10.2007
REV-3	AS BUILT	29.01.08	HB	Drawn	HB
REV-2	UPDATE	30.10.07	HB	Rev.	REV-0

FRESH WATER SKID, PWS
DIVEX OCEANICS
DAWN ROAD
CAPE TOWN

This document is the property of HBSystems(Pty)Ltd

HBSystems
Electrical Engineering & Automation

PUMP DRIVE PARAMETERS

FRESH WATER SKID, PWS

PROJ REF. NP
=
+

DRAWING NO. HBN221S

Sheet 2a of 11 Sh

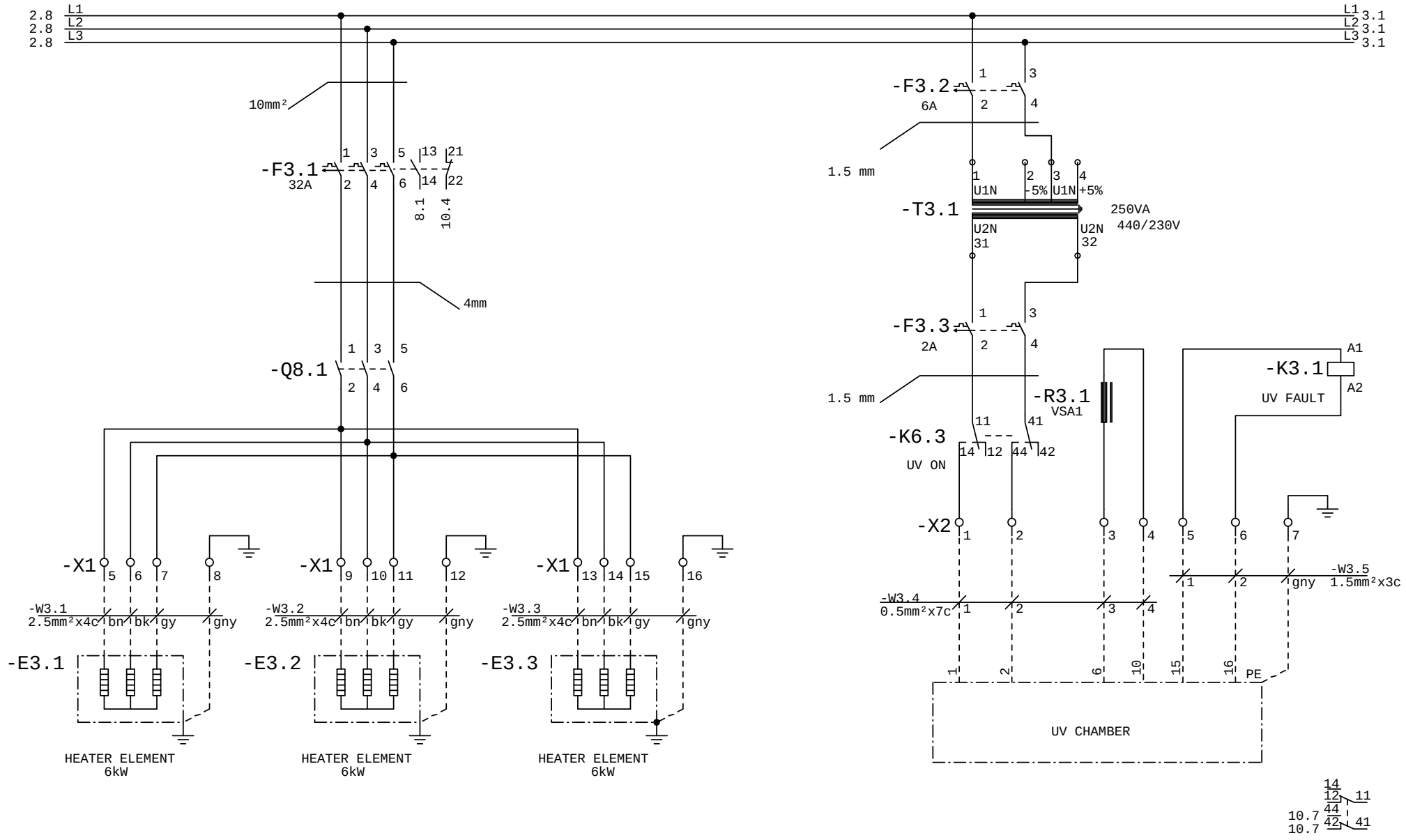

Rev	Comment	Date	Name	Comm.	DESIGN
REV-4	ADD CONTR CB	07.02.08	HB	Date	4.10.2007
REV-3	AS BUILT	29.01.08	HB	Drawn	HB
REV-2	UPDATE	30.10.07	HB	Rev.	REV-0

FRESH WATER SKID, PWS
DIVEX OCEANICS
DAWN ROAD
CAPE TOWN

This document is the property of HBSystems(Pty)Ltd

HBSystems
Electrical Engineering & Automation

HEATER 3 x 6kW
UV EQUIPMENT

FRESH WATER SKID, PWS

PROJ REF.
NP

=
+

DRAWING NO.
HBN221S

Sheet 3
of 11 Sh

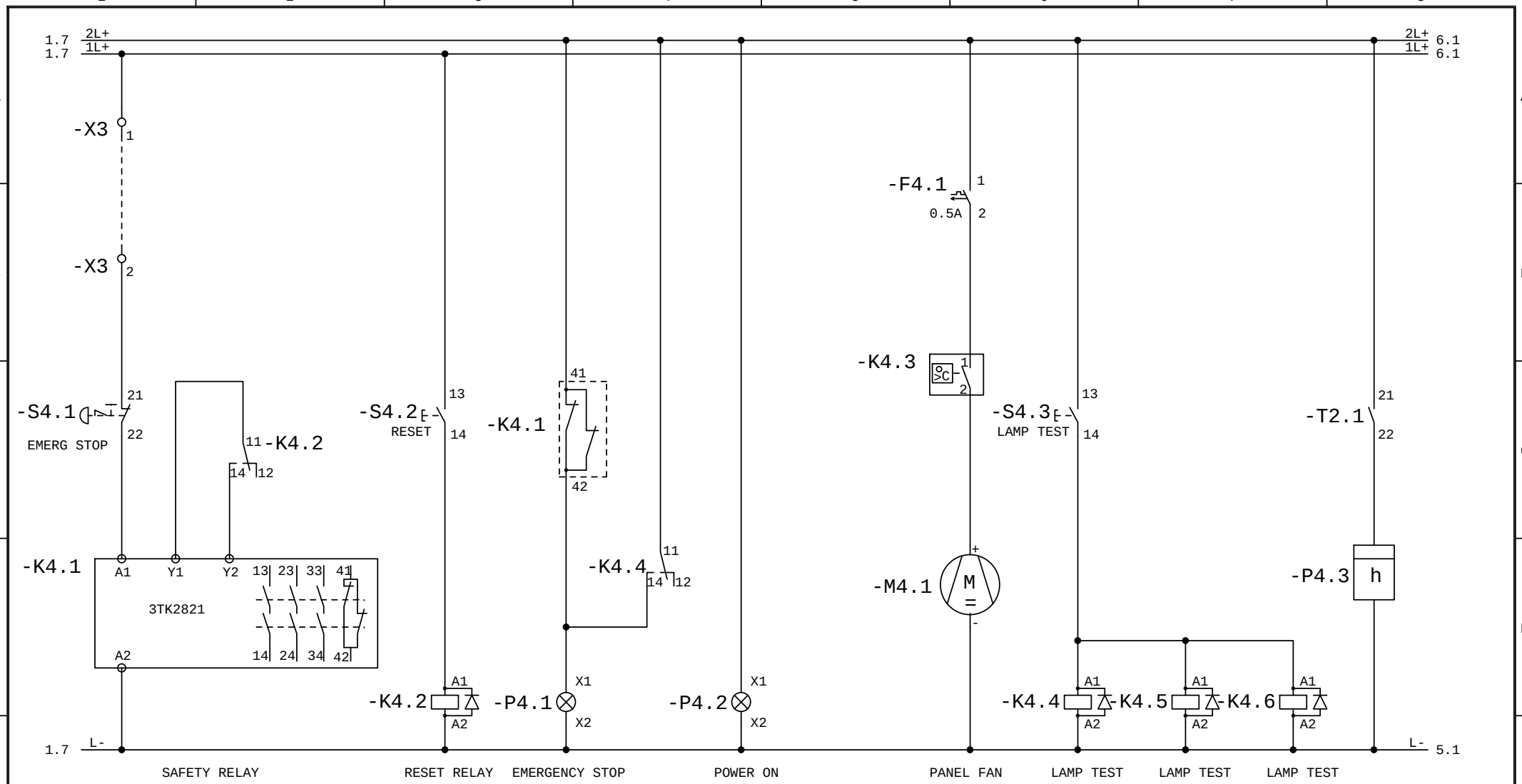

Rev	Comment	Date	Name	Comm.	DESIGN
REV-4	ADD CONTR CB	07.02.08	HB	Date	4.10.2007
REV-3	AS BUILT	29.01.08	HB	Drawn	HB
REV-2	UPDATE	30.10.07	HB	Rev.	REV-0

FRESH WATER SKID, PWS
DIVEX OCEANICS
DAWN ROAD
CAPE TOWN

This document is the property of HBSystems(Pty)Ltd

HBSystems
Electrical Engineering & Automation

EMERGENCY STOP, PANEL FAN, LAMP TEST

FRESH WATER SKID, PWS

PROJ REF. NP
=
+

DRAWING NO. HBN221S

Sheet 4 of 11 Sh

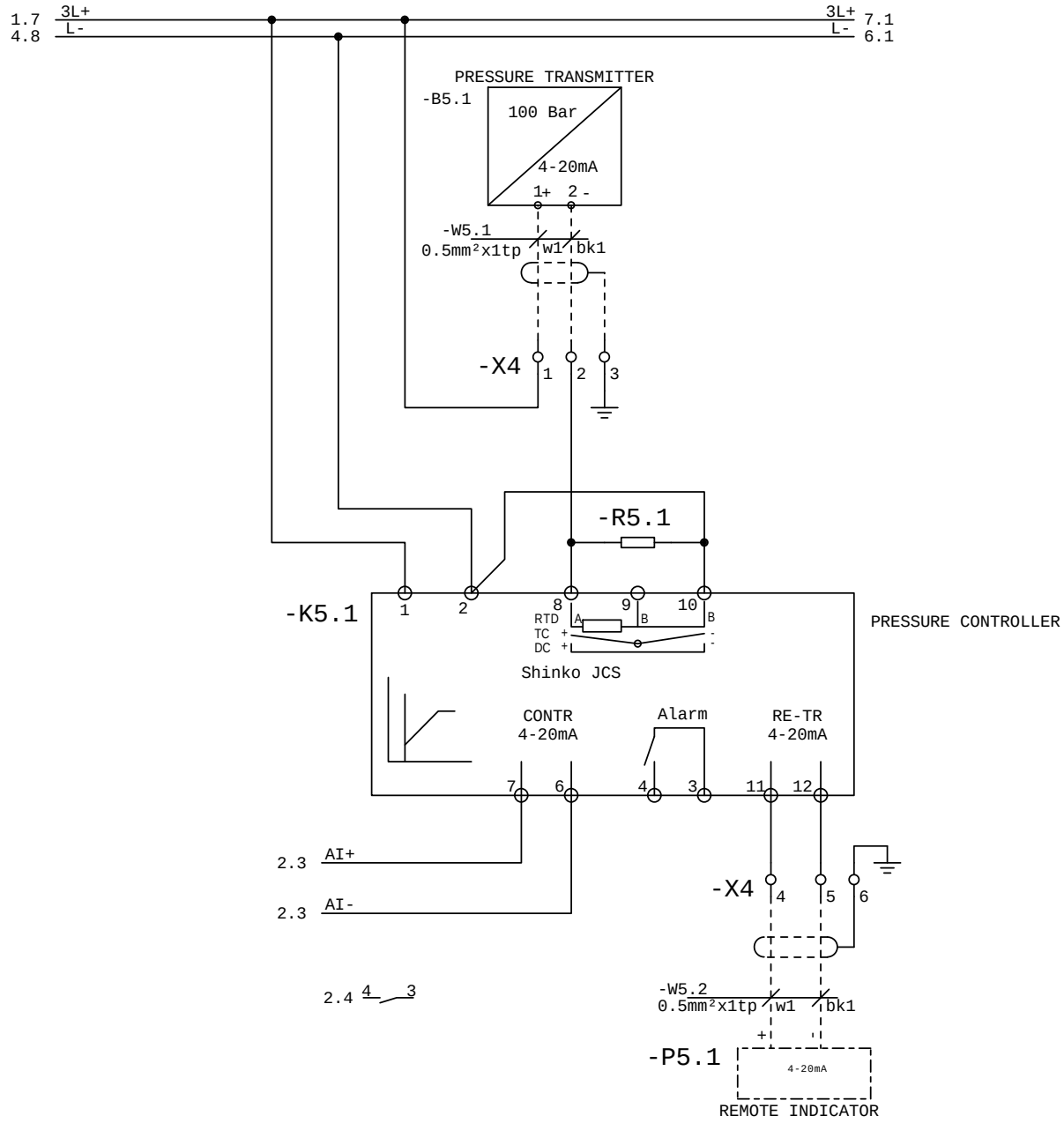

Rev	Comment	Date	Name	Comm.	DESIGN
REV-4	ADD CONTR CB	07.02.08	HB	Date	4.10.2007
REV-3	AS BUILT	29.01.08	HB	Drawn	HB
REV-2	UPDATE	30.10.07	HB	Rev.	REV-0

FRESH WATER SKID, PWS
DIVEX OCEANICS
DAWN ROAD
CAPE TOWN

This document is the property of HBSystems(Pty)Ltd

HBSystems
Electrical Engineering & Automation

PRESSURE CONTROL

FRESH WATER SKID, PWS

PROJ REF. NP
=
+

DRAWING NO. HBN221S

Sheet 5 of 11 Sh

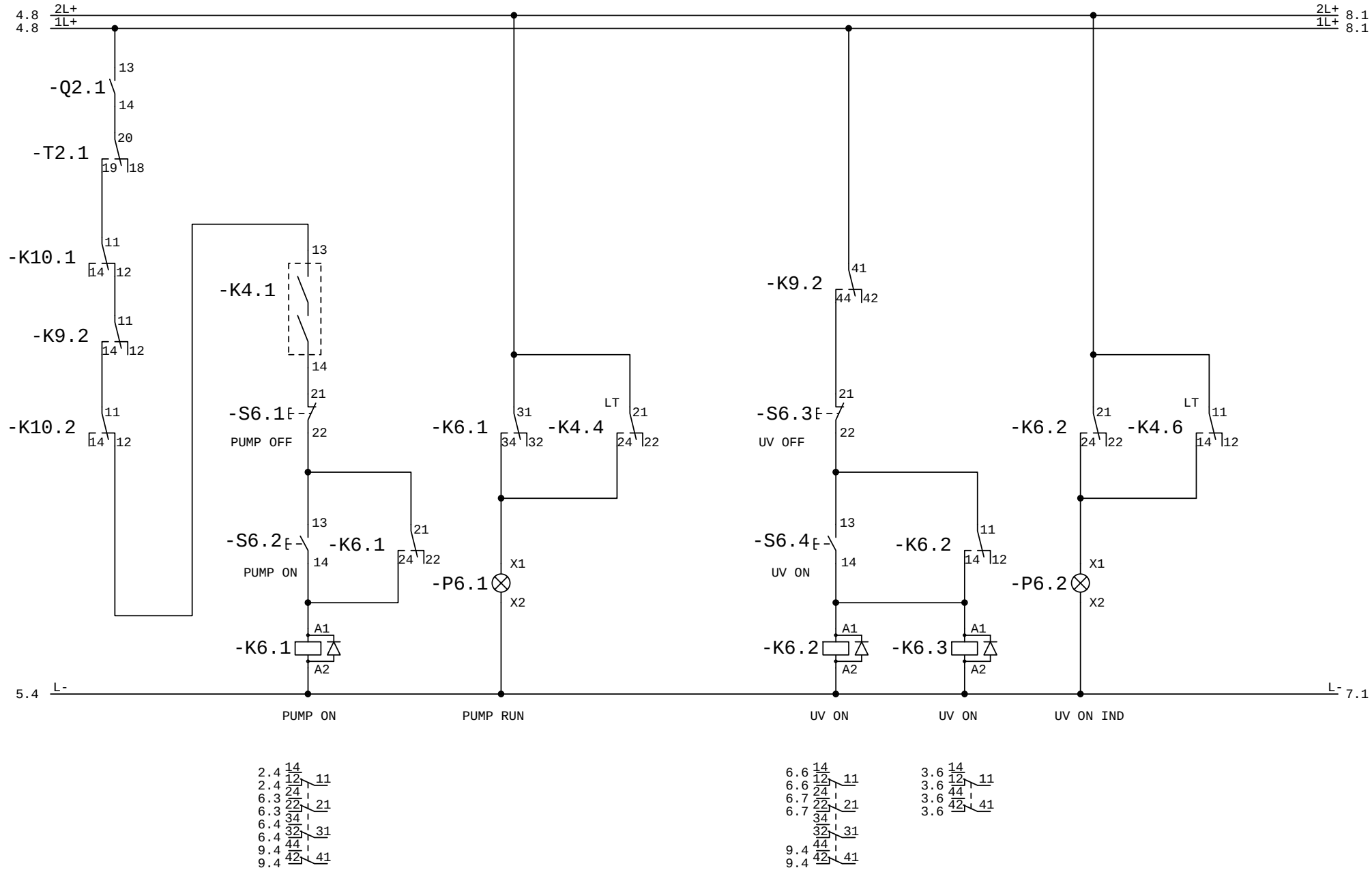

REV-4	ADD CONTR CB	07.02.08	HB	Date	4.10.2007	FRESH WATER SKID, PWS DIVEX OCEANICS DAWN ROAD CAPE TOWN	HBSystems Electrical Engineering & Automation	PUMP CONTROL, UV CONTROL	PROJ REF. NP = +
REV-3	AS BUILT	29.01.08	HB	Drawn	HB				DRAWING NO. HBN221S
REV-2	UPDATE	30.10.07	HB	Rev.	REV-0			FRESH WATER SKID, PWS	Sheet 6 of 11 Sh
Rev	Comment	Date	Name	Comm.	DESIGN	This document is the property of HBSystems(Pty)Ltd			

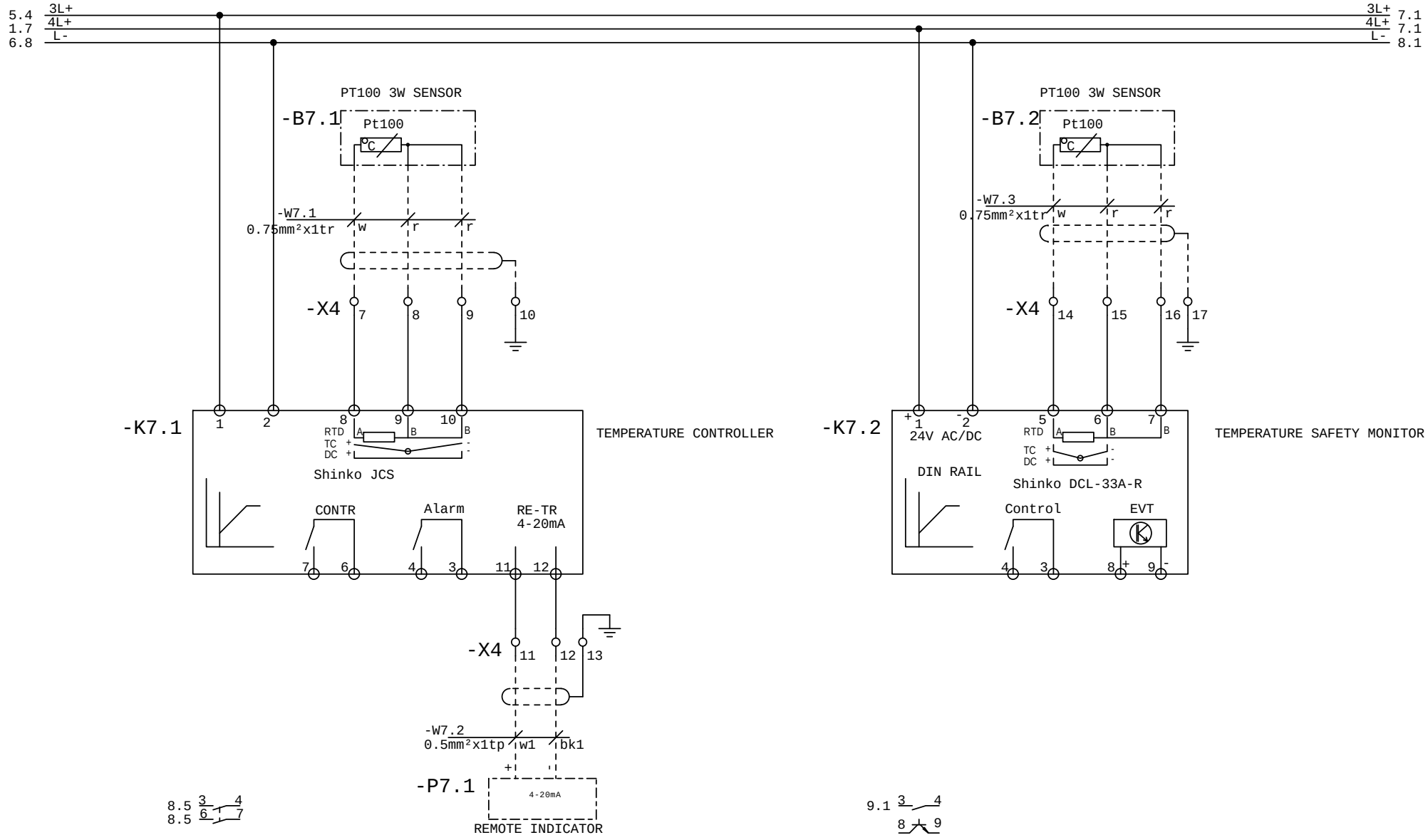

Rev	Comment	Date	Name	Comm.	DESIGN
REV-4	ADD CONTR CB	07.02.08	HB	Date	4.10.2007
REV-3	AS BUILT	29.01.08	HB	Drawn	HB
REV-2	UPDATE	30.10.07	HB	Rev.	REV-0

FRESH WATER SKID, PWS
DIVEX OCEANICS
DAWN ROAD
CAPE TOWN

This document is the property of HBSystems(Pty)Ltd

HB Systems
Electrical Engineering & Automation

TEMPERATURE CONTROL
TEMPERATURE SAFETY MONITOR

FRESH WATER SKID, PWS

PROJ REF. NP
=
+

DRAWING NO. HBN221S

Sheet 7 of 11 Sh

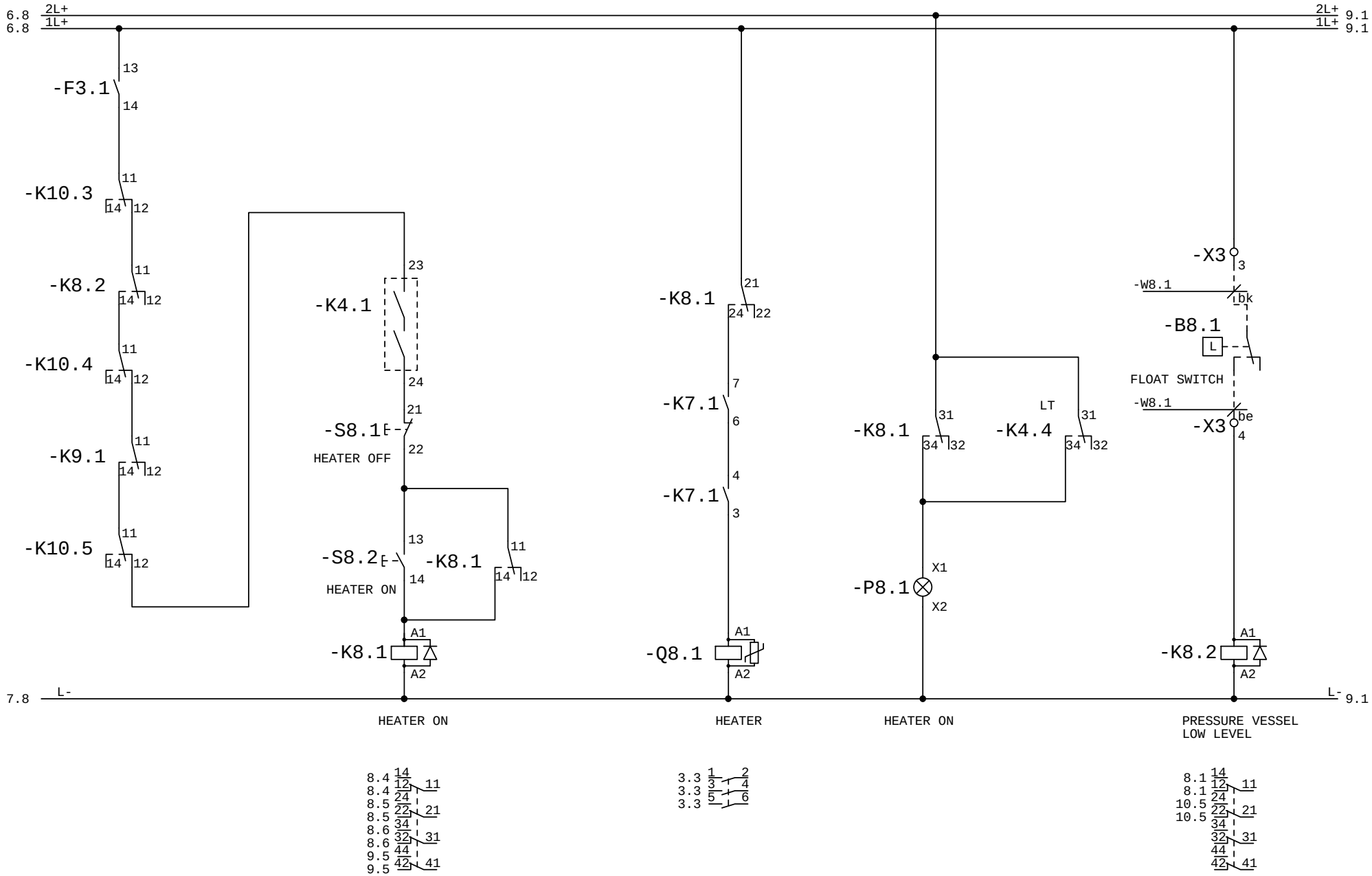

Rev	Comment	Date	Name	Comm.	DESIGN
REV-4	ADD CONTR CB	07.02.08	HB	Date	4.10.2007
REV-3	AS BUILT	29.01.08	HB	Drawn	HB
REV-2	UPDATE	30.10.07	HB	Rev.	REV-0

FRESH WATER SKID, PWS
DIVEX OCEANICS
DAWN ROAD
CAPE TOWN

This document is the property of HBSystems(Pty)Ltd

HBSystems
Electrical Engineering & Automation

HEATER CONTROL, LEVEL MONITOR

FRESH WATER SKID, PWS

PROJ REF. NP
=
+

DRAWING NO. HBN221S

Sheet 8 of 11 Sh

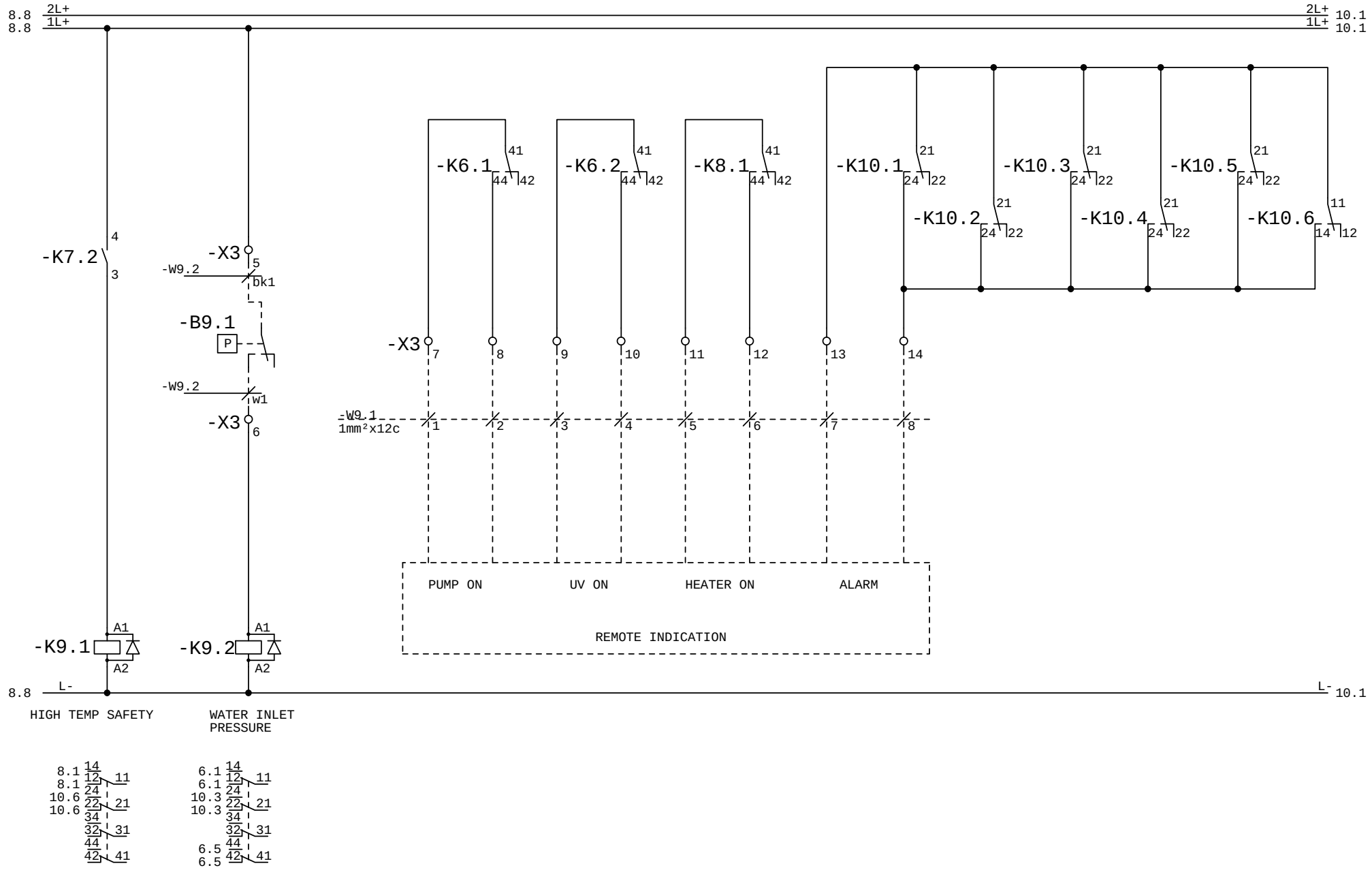

Rev	Comment	Date	Name	Comm.	DESIGN
REV-4	ADD CONTR CB	07.02.08	HB	Date	4.10.2007
REV-3	AS BUILT	29.01.08	HB	Drawn	HB
REV-2	UPDATE	30.10.07	HB	Rev.	REV-0

FRESH WATER SKID, PWS
DIVEX OCEANICS
DAWN ROAD
CAPE TOWN

This document is the property of HBSystems(Pty)Ltd

HBSystems
Electrical Engineering & Automation

HEATER SAFTY, WATER INLET PRESSURE
REMOTE ALRM

FRESH WATER SKID, PWS

PROJ REF. NP
=
+

DRAWING NO. HBN221S

Sheet 9 of 11 Sh

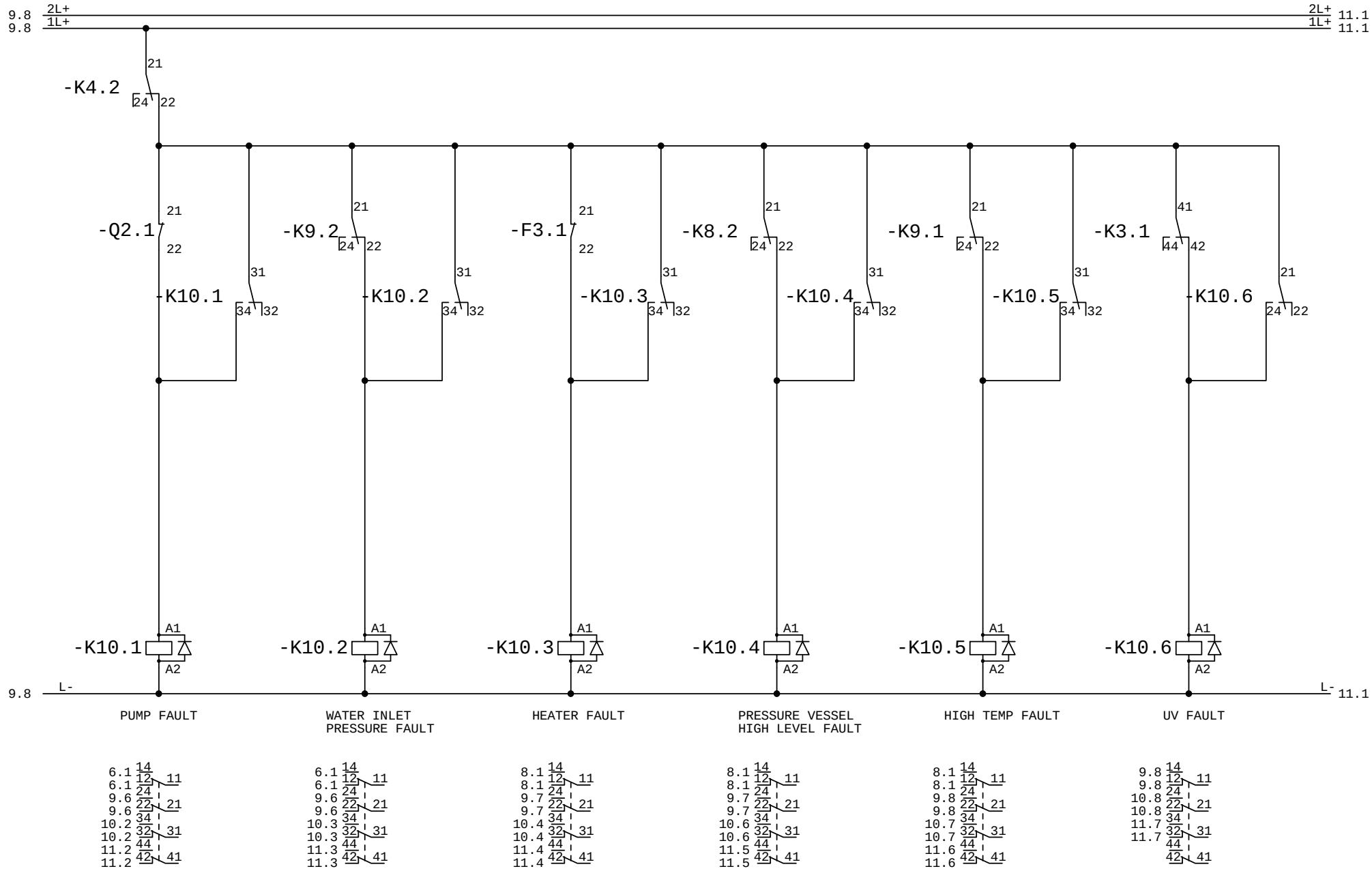

Rev	Comment	Date	Name	Comm.	DESIGN
REV-4	ADD CONTR CB	07.02.08	HB	Date	4.10.2007
REV-3	AS BUILT	29.01.08	HB	Drawn	HB
REV-2	UPDATE	30.10.07	HB	Rev.	REV-0

FRESH WATER SKID, PWS
DIVEX OCEANICS
DAWN ROAD
CAPE TOWN

This document is the property of HBSystems(Pty)Ltd

HBSystems
Electrical Engineering & Automation

ALARMS

FRESH WATER SKID, PWS

PROJ REF. NP
=
+

DRAWING NO. HBN221S

Sheet 10 of 11 Sh

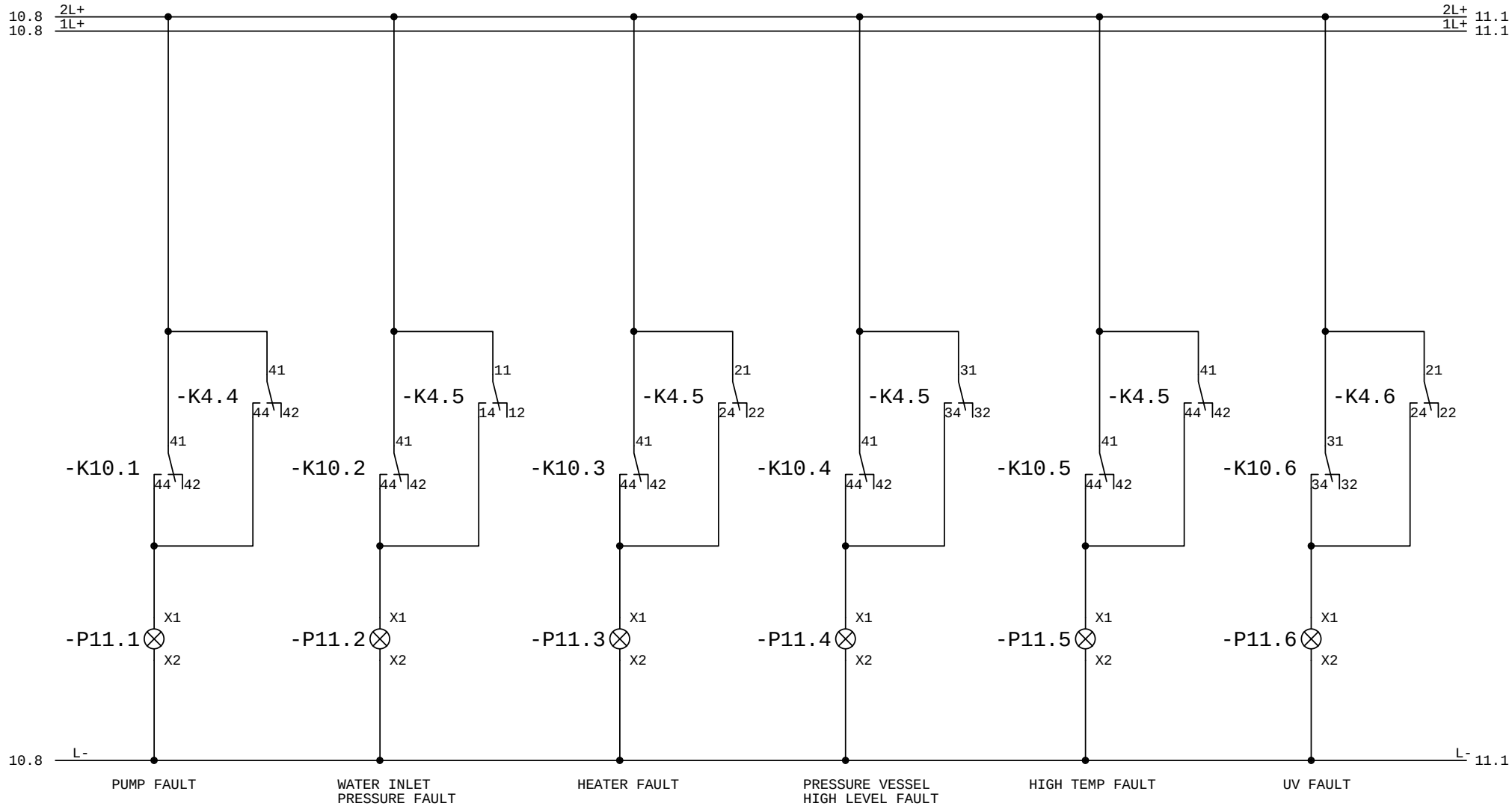

Rev	Comment	Date	Name	Comm.	DESIGN
REV-4	ADD CONTR CB	07.02.08	HB	Date	4.10.2007
REV-3	AS BUILT	29.01.08	HB	Drawn	HB
REV-2	UPDATE	30.10.07	HB	Rev.	REV-0

FRESH WATER SKID, PWS
DIVEX OCEANICS
DAWN ROAD
CAPE TOWN

This document is the property of HBSystems(Pty)Ltd

HBSystems
Electrical Engineering & Automation

ALARMS

FRESH WATER SKID, PWS

PROJ REF. NP
=
+

DRAWING NO. HBN221S

Sheet 11 of 11 Sh

Material List FRESH WATER SKID, PWS

Sheet 1

Item	Qty	Description	Part No	Designation	Manufacturer
1	1	REMOTE INDICATION		-P9.1	
2	12	Standard terminal 10mm² UK10N	3005073	-X1	Phoenix
3	21	Standard Spring Cage 2,5mm² ST2,5	3031212	-M, -X4, -1L+, -2L+	Phoenix
4	5	Standard Spring Cage 2,5mm² ST2,5 PE	3031212/PE	-X4	Phoenix
5	23	Standard Spring Cage 4mm² ST4	3031364	-X1, -X2, -X3	Phoenix
6	2	Standard Spring Cage 4mm² ST4 PE	3031364/PE	-X1, -X2	Phoenix
7	1	Emerg Off Isol 22KW 63A BASE	3LD2514-0TK53	-Q1.1	Siemens
8	1	Contactor 4KW DC 24V, 3P S0, SCRW	3RT1023-1BB40	-Q8.1	Siemens
9	1	VARISTOR, AC 24-48 V,DC24-70 V, S0,S2	3RT1926-1BB00		Siemens
10	1	CIRC BREAK, S0, MOTOR;17-22 A,SCRW	3RV1021-4CA10	-Q2.1	Siemens
11	1	AUX. CONTACT ON TOP 1NO + 1NC S00-S3,	3RV1901-1E		Siemens
12	1	Pushbutt. fl. bk,22mm	3SB3000-0AA11	-S4.2	Siemens
13	3	Pushbutt. fl. r,22mm	3SB3000-0AA21	-S6.1, -S6.3, -S8.1	Siemens
14	1	Pushbutt. fl. y,22mm	3SB3000-0AA31	-S4.3	Siemens
15	3	Pushbutt. fl. gr,22mm	3SB3000-0AA41	-S6.2, -S6.4, -S8.2	Siemens
16	1	Emerg Stop PB Twist Release + holder	3SB3000-1HA20	-S4.1	Siemens
17	7	3SB3001-6 Indicator Light red	3SB3001-6BA20	-P4.1, -P11.1, -P11.2, -P11.3	Siemens
				-P11.4, -P11.5, -P11.6	
18	3	3SB3001-6 Indicator Light green	3SB3001-6BA40	-P6.1, -P6.2, -P8.1	Siemens
19	1	3SB3001-6 Indicator Light white	3SB3001-6BA60	-P4.2	Siemens
20	5	Contact block, 1NO	3SB3400-0B		Siemens
21	4	Contact block, 1NC	3SB3400-0C		Siemens
22	7	Lamp holder, LED red 24V	3SB3400-1PB		Siemens
23	3	Lamp holder, LED green 24V	3SB3400-1PC		Siemens
24	1	Lamp holder, LED white 24V	3SB3400-1PE		Siemens
25	1	Safety Comb Relay 3NO 1NC Spring 24VAC/DC	3TK28 21-2CB30	-K4.1	Siemens
26	1	Transformer 1 Phase 440V +/-5% /230V 250VA	4AM40 42-5CT10-0FA0	-T3.1	Siemens
27	1	R-Meas Resistor	50 Ohm	-R5.1	Shinko
28	1	Relay 10A 2w	55.32 230VAC 10A 2w	-K3.1	Finder
29	1	Relay 10A 2w	55.32 24VDC 10A 2w	-K6.3	Finder
30	16	Relay 5A 4w 55.34	55.34 24VDC 5A 4w	-K4.2, -K4.4, -K4.5, -K4.6	Finder
				-K6.1, -K6.2, -K8.1, -K8.2	
				-K9.1, -K9.2, -K10.1, -K10.2	

Rev	Comment	Date	Name	Comm.	DESIGN
REV-4	ADD CONTR CB	07.02.08	HB	Rev.	REV-0
				Drawn	HB
				Date	4.10.2007

FRESH WATER SKID, PWS
DIVEX OCEANICS
DAWN ROAD
CAPE TOWN

Copyright reserved HBSystems(Pty)Ltd, 1995/07121/07

HB Systems
Electrical Engineering & Automation

FRESH WATER SKID, PWS

PROJ REF.
NP

DRAWING NO.
HBN221M

Sheet 1
of 2 Sh

Material List FRESH WATER SKID, PWS

Sheet 2

Item	Qty	Description	Part No	Designation	Manufacturer
				-K10.3, -K10.4, -K10.5, -K10.6	
31	1	MM4 BASIC OPERATOR PANEL	6SE6400-0BP00-0AA0		Siemens
32	1	Commutation Choke 3ph MM440 5.5kW, 7.5KW	6SE6400-3CC02-2CD3	-R2.1	Siemens
33	1	MM440 380V-480V 3PH 7.5KW	6SE6440-2UD27-5CA1	-T2.1	Siemens
34	2	Relay base 10A 2w 55.31/32	94.02		Finder
35	16	Relay base 10A 4w 55.34	94.04		Finder
36	1	LED AND DIODE MOD 110-240VAC/DC FOR 94.02/4	99.02.0.230.59		Finder
37	17	LED AND DIODE MODULE 6-24VDC FOR 94.02/4 ETC	99.02.9.024.99		Finder
38	1	Current Transformer 50:1 1.5VA hole dia 21mm	BE-20MCT/05/1	-T1.1	Electro
39	1	CT operated Ammeter 72mm */1A	BEA01AT7 /1A Ammeter 72mm	-P1.1	Electro
40	1	Running hour meter 10-60VDC	BEHCD/7	-P4.3	Electro
41	1	PID CONTROLLER RELAY OUT 1 EVT 24VDC/AC	DCL-33A-R/M 24V	-K7.2	Shinko
42	1	Power Supply 24V DC 5 A 340-550VAC	DRH-120-24	-T1.2	Mean Well
43	1	PID CONTROLLER 4-20mA OUT 1 AL 24VDC/AC, RE-TR	JCS-33A-A/M1,TA	-K5.1	Shinko
44	1	PID CONTROLLER RELAY OUT 1 AL 24VDC/AC, RE-TR	JCS-33A-R/M1,TA	-K7.1	Shinko
45	1	Thermostat NO	KTS1141	-K4.3	Lohmeier
46	1	CIRC BREAK 1P 6KA 0.5A C-curve	MC100 CB 1P 0.5A	-F4.1	Hager
47	4	CIRC BREAK 1P 6KA 2A C-curve	MC102 CB 1P 2A	-F1.2, -F1.3, -F1.4, -F1.5	Hager
48	1	CIRC BREAK 2P 6KA 2A C-curve	MC202 CB 2P 2A	-F3.3	Hager
49	1	Aux Contact for Hager CB	MZ201		Hager
50	1	CIRC BREAK 3P 10KA 32A C-curve	NC332 CB 3P 32A	-F3.1	Hager
51	2	CIRC BREAK 2P 10KA 6A D-curve	ND206 CB 2P 6A	-F1.1, -F3.2	Hager
52	1	FILTERFAN pf 2000 24VDC	PF 2000 24VDC 14W/19W	-M4.1	Pfannenberg
53	1	Exhaust Filter PFA 2000	PFA 2000		Pfannenberg
54	1	VSA1	UV-VSA1	-R3.1	

Rev	Comment	Date	Name		
REV-4	ADD CONTR CB	07.02.08	HB		

Date	4.10.2007
Drawn	HB
Rev.	REV-0
Comm.	DESIGN

FRESH WATER SKID, PWS
DIVEX OCEANICS
DAWN ROAD
CAPE TOWN

Copyright reserved HBSystems(Pty)Ltd, 1995/07121/07

HB Systems
Electrical Engineering & Automation

FRESH WATER SKID, PWS

PROJ REF.
NP

DRAWING NO.
HBN221M

Sheet 2
of 2 Sh

APPENDIX 7 Honeywell – Pressure Regulating Valve

(Left blank intentionally)

Honeywell

D06FI

Pressure reducing valve with balanced seat
Stainless steel pattern

Product specification sheet

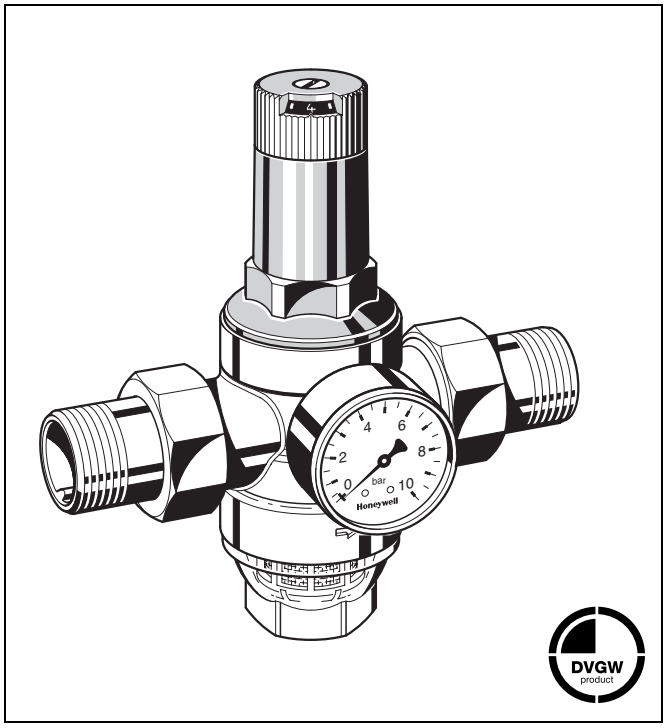

Construction

The pressure reducing valve comprises:

- Housing with G$^1/_4$" pressure gauge connections on both sides
- Threaded male connections (options A & B)
- Valve insert complete with diaphragm and valve seat
- Fine filter with 0.16 mm mesh
- Spring bonnet with adjustment knob and setting scale
- Filter bowl
- Adjustment spring
- Pressure gauge not included (see accessories)

Materials

- Stainless steel housing
- Stainless steel threaded connections
- High-quality synthetic material valve insert
- Stainless steel fine filter mesh
- High-quality synthetic material spring bonnet with adjustment knob and setting scale
- Clear synthetic or stainless steel filter bowl
- Spring steel adjustment spring
- Fibre-reinforced NBR diaphragm
- NBR seals

Application

Pressure reducing valves of this type protect household water installations against excessive pressure from the supply. They can also be used for industrial or commercial applications within the range of their specification.

By installing a pressure reducing valve, pressurisation damage is avoided and water consumption is reduced.

The set pressure is also maintained constant, even when there is wide inlet pressure fluctuation.

Reduction of the operating pressure and maintaining it at a constant level minimizes flow noise in the installation.

Special Features

- DVGW approved
- Up to size 1$^1/_4$" approved for low noise, Group 1 without limitations
- The outlet pressure is set by turning the adjustment knob
- The set pressure is directly indicated on the set point scale
- The adjustment spring is not in contact with the potable water
- The valve insert is of high quality synthetic material and can be fully exchanged
- Integral fine filter
- Also available without fittings
- Inlet pressure balancing - fluctuating inlet pressure does not influence outlet pressure
- Light weight
- Meets KTW recommendations for potable water

Range of Application

Medium	Water, compressed air* and nitrogen* in consideration of valid standards (e.g. DIN EN 12502)
Inlet pressure	max. 16 bar with clear filter bowl max. 25 bar with stainless steel filter bowl
Outlet pressure	1.5-6.0 bar (preset to 3 bar)

Technical Data

Operating temperature	max. 40 °C with clear filter bowl max. 70 °C with stainless steel filter bowl
Minimum pressure drop	1.0 bar
Connection size	$^1/_2$" to 2"

*As part of an installation being approved according to PED requirements, this product must also be certified.

EN0H-1035GE23 R0208 • Subject to change

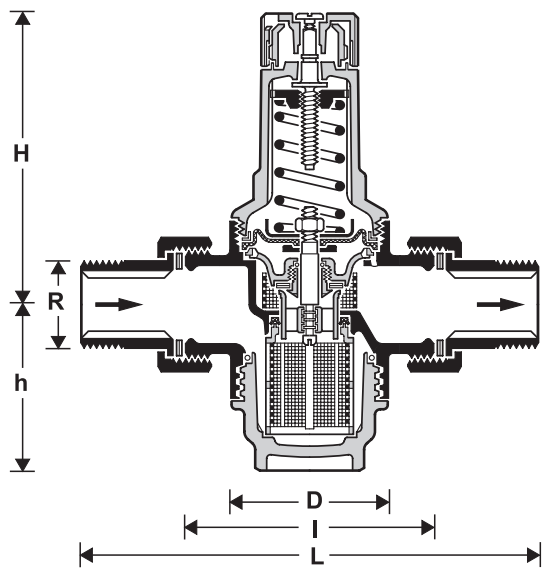

Method of Operation

Spring loaded pressure reducing valves operate by means of a force equalising system. The force of a diaphragm operates against the force of an adjustment spring. If the outlet pressure and therefore diaphragm force fall because water is drawn, the then greater force of the spring causes the valve to open. The outlet pressure then increases until the forces between the diaphragm and the spring are equal again.

The inlet pressure has no influence in either opening or closing of the valve. Because of this, inlet pressure fluctuation does not influence the outlet pressure, thus providing inlet pressure balancing.

Options

D06FI-... A = With threaded male connections, clear filter bowl - up to 40 °C

D06FI-... B = With threaded male connections, stainless steel filter bowl - up to 70 °C

Without fittings, with clear filter bowl - up to 40 °C

Connection size

Connection size	R	1/2"	3/4"	1"	1 1/4"	1 1/2"	2"
Nominal size diameter	DN	15	20	25	32	40	50
Weight (A-Version)	kg	0.7	0.8	1.2	1.6	2.9	3.6
Dimensions	mm						
	L	140	160	180	200	225	255
	I	80	90	100	105	130	140
	H	89	89	111	111	173	173
	h	58	58	64	64	126	126
	D	54	54	61	61	82	82
k_{VS}-value	m^3/h	2.4	3.1	5.8	5.9	12.6	12.0
DVGW-Approval No.		DW-6330AT2314					

* Compulsory testing in sizes R 1/2" to R 1 1/4"

M07M

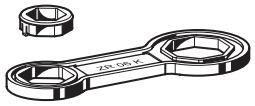

ZR06K

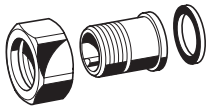

VST06I-A

Accessories

M07M Pressure gauge

Housing diameter 63 mm, rear connection thread G1/4". Ranges: 0 - 4, 0 - 10, 0 - 16 or 0 - 25 bar. Please indicate upper value of pressure range when ordering

ZR06K Double ring wrench

For removal of spring bonnet and filter bowl

VST06I-A Connection set

With stainless steel threaded connections

EN0H-1035GE23 R0208 • Subject to change

Installation Example

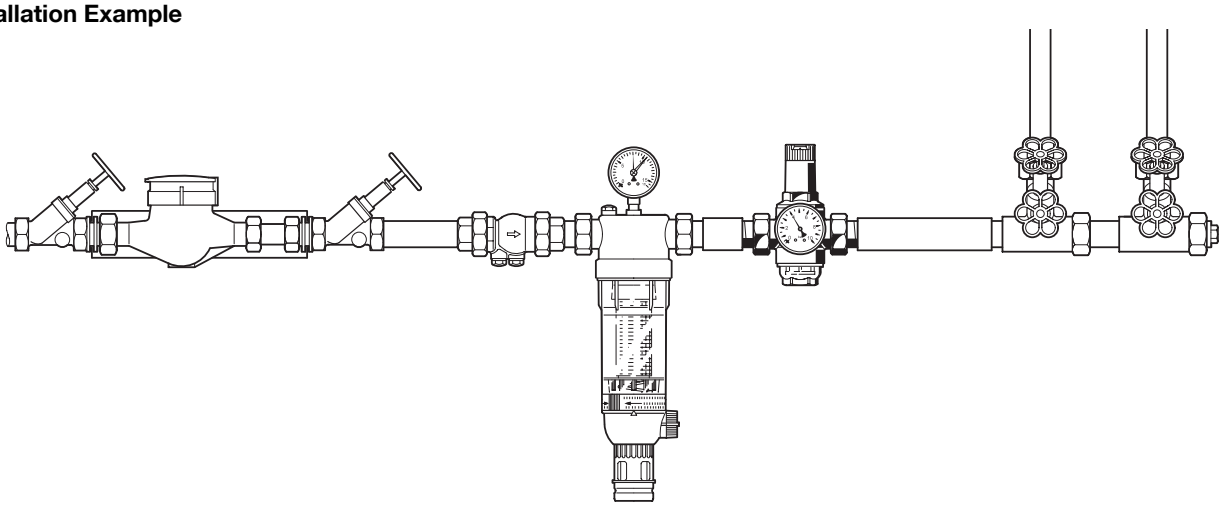

Connection size	R	1/2"	3/4"	1"	1 1/4"	1 1/2"	2"
	DN	15	20	25	32	40	50
W*	mm	55	55	60	60	70	70

* Minimum distance from wall to centre line of pipework

Installation Guidelines

- Install in horizontal pipework with filter bowl downwards.
- Install shutoff valves
- The device downstream should be protected by means of a safety valve (installed downstream of the pressure reducing valve).
- The installation location should be protected against frost and be easily accessible
  - o Pressure gauge can be read off easily
  - o With clear filter bowl, degree of contamination can be easily seen
  - o Simplified maintenance and cleaning
- For residential applications where maximum protection against dirt is required, install a fine filter upstream of the pressure reducing valve
- Provide a straight section of pipework of at least five times the nominal valve size after the pressure reducing valve (in accordance with DIN 1988, Part 5)

Typical Applications

Pressure reducing valves of this type are suitable for all types of household water installations.

Pressure reducing valves can also be used for industrial and commercial applications within the range of their specifications.

Pressure reducing valves should be installed:

- If the static pressure exceeds the maximum permissible value for the system
- As protection against noise if the static pressure at take off points exceeds 5.0 bar (DIN 4109: Noise protection in high buildings)
- If several pressure zones are required when a pressurisation system is used (pressure reducers on each storey of a building)
- If pressure fluctuations in the downstream system must be avoided
- To achieve constant inlet and outlet pressures on pumped pressure boosting systems

Flow Diagram

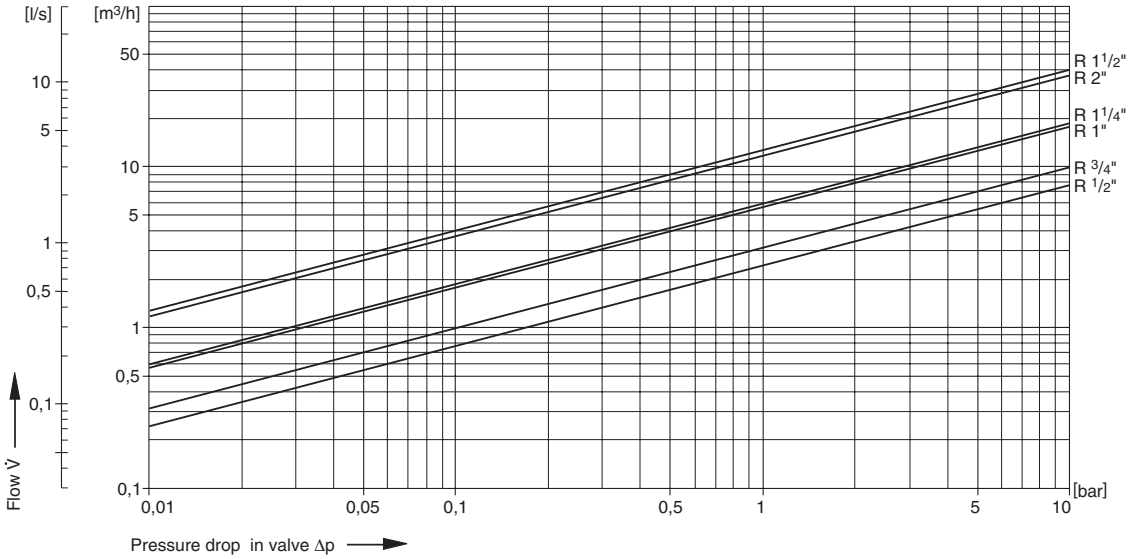

EN0H-1035GE23 R0208 • Subject to change

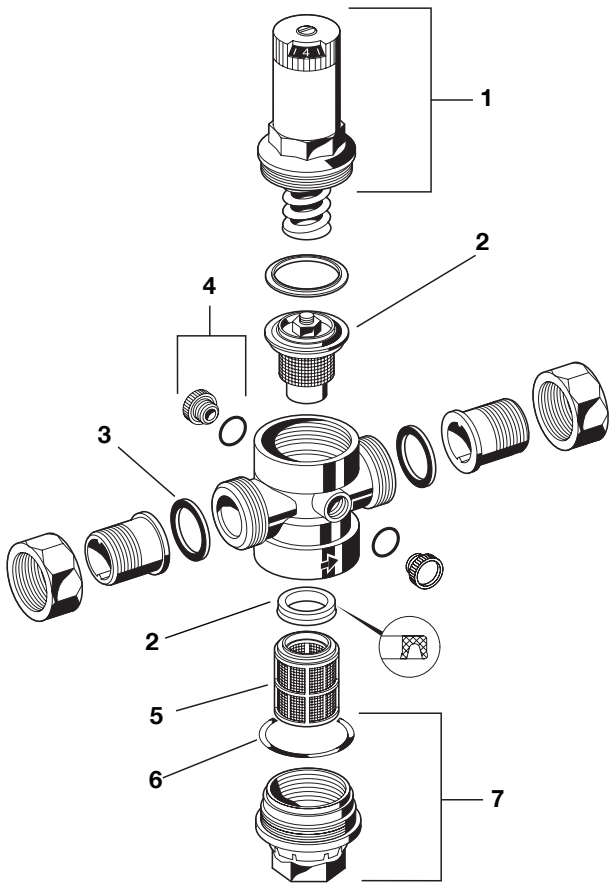

Spare Parts

Pressure Reducing Valve D06FI, from 2007 onwards

No.	Description	Dimension	Part No.
1	Spring bonnet complete	1/2" + 3/4"	0901515
		1" + 1 1/4"	0901516
		1 1/2" + 2"	0901518
2	Valve insert complete D06FI (without filter)	1/2" + 3/4"	D06FI-1/2
		1" + 1 1/4"	D0FI-1
		1 1/2" + 2"	D06FI-11/2
3	Union seal washer (10 pcs.)	1/2"	0901443
		3/4"	0901444
		1"	0901445
		1 1/4"	0901446
		1 1/2"	0901447
		2"	0901448
4	Blanking plug with O-ring R 1/4" (5 pcs.)		S06K-1/4
5	Replacement filter insert D06F, D06FI	1/2" + 3/4"	ES06F-1/2A
		1" + 1 1/4"	ES06F-1B
		1 1/2" + 2"	ES06F-11/2A
6	O-ring set for D06FI (10 pcs.)	1/2" + 3/4"	0901246
		1" + 1 1/4"	0901499
		1 1/2" + 2"	0901248
7	Clear filter bowl with O-ring for D06FI	1/2" + 3/4"	SK06T-1/2
		1" + 1 1/4"	SK06T-1B
		1 1/2" + 2"	SK06T-11/2
8	Stainless steel filter bowl with O-ring D06FI	1/2" + 3/4"	SI06T-1/2
		1" + 1 1/4"	SI06T-1
		1 1/2" + 2"	SI06T-11/2

Honeywell GmbH
Haustechnik
Hardhofweg
D-74821 Mosbach
Telefon (0 18 01) 46 63 88
Telefax (08 00) 0 46 63 88
www.honeywell.de/haustechnik

Hergestellt im Auftrag von Environmental and Combustion Controls Division of Honeywell Technologies Sàrl, Ecublens, Route du Bois 37, Switzerland durch die autorisierte Vertretung Honeywell GmbH.

EN0H-1035GE23 R0208
Änderungen vorbehalten
© 2007 Honeywell GmbH

Honeywell

Honeywell

D06F, D06FH, D06FN, D06F-1/4ZA, D06FI

Einbauanleitung • Installation instructions • Notice de montage • Installatiehandleiding • Istruzioni di montaggio Instrucciones de montaje • Asennusohje • Инструкция по монтажу **• Instruções de montagem • Instrukcja montazu Installasjoninstruksjon**

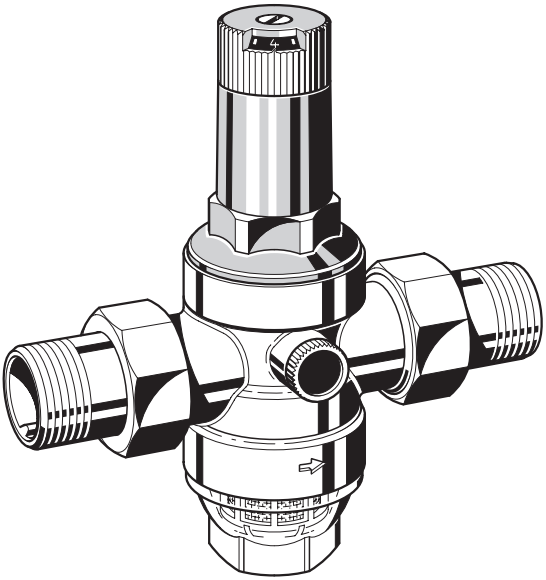

Druckminderer
Pressure Reducing Valve
Disconnecteur
Drukreduceerklep
Riduttore di pressione
Válvula reductora de presión

Paineenalennusventtiili
Редуктор давления
Reduktor ciśnienia
Redutor de pressão
Trykkreduksjonsventil
Basınç azaltıcının

EB-D06F Rev. H

1. Safety Guidelines

1. Follow the installation instructions.
2. Use the appliance
- according to its intended use
- in good condition
- with due regard to safety and risk of danger.
3. Note that the appliance is exclusively for use in the applications detailed in these installation instructions. Any other use will not be considered to comply with requirements and would invalidate the warranty.
4. Please take note that any assembly, commissioning, servicing and adjustment work may only be carried out by authorized persons.
5. Immediately rectify any malfunctions which may influence safety.

2. Functional description

Spring loaded pressure reducing valves operate by means of a force equalising system. The force of a diaphragm operates against the force of an adjustment spring. If the outlet pressure and therefore diaphragm force fall because water is drawn, the then greater force of the spring causes the valve to open. The outlet pressure then increases until the forces between the diaphragm and the spring are equal again.
The inlet pressure has no influence in either opening or closing of the valve. Because of this, inlet pressure fluctuation does not influence the outlet pressure, thus providing inlet pressure balancing.

3. Application

Medium	Water, compressed air* and nitrogen* in consideration of valid standards (e.g. DIN EN 12502)
Inlet pressure	max. 16 bar with clear filter bowl max. 25 bar with brass or stainless steel filter bowl
Outlet pressure	1.5-6.0 bar - D06F, D06FI (preset to 3 bar) 0.5-2.0 bar - D06FN (preset to 1.5 bar) 1.5-12.0 bar - D06FH (preset to 5 bar) 0.5-3.0 bar - D06F-1/4ZA (preset to 1 bar)

⚠ Caution !
In applications where UV radiation and solvent vapours are present, use the SM06T brass filter bowl!

4. Technical data

Operating temperature	Maximum 40°C with clear filter bowl Maximum 70°C with brass or stainless steel filter bowl
Minimum pressure drop	1.0 bar (D06F, D06FH, D06FI, D06F-1/4ZA) 0.5 bar (D06FN)
Connection size	$^1/_2$" - 2" (D06F, D06FH, D06FI, D06FN) $^1/_4$" (D06F-1/4ZA)

* As part of an installation being approved according to PED requirements, this product must also be certified.

5. Scope of delivery

The pressure reducing valve comprises:
- Housing with G$^1/_4$" pressure gauge connections on both sides
- Threaded male connections (options A & B)
- Valve insert complete with diaphragm and valve seat
- Fine filter with 0.16 mm mesh
- Spring bonnet with adjustment knob and setting scale
- Filter bowl
- Adjustment spring
- Venturi-nozzle
  o D06F, D06FH, D06FI - 1$^1/_4$" + 2"
  o D06FN - 2"
- Pressure gauge not included (see accessories)

6. Options

D06F, FI-... A =	With threaded male connections, clear filter bowl - up to 40°C
D06F, FH, FN-... B =	With threaded male connections, brass bowl - up to 70°C
D06F-1/4ZA =	With threaded male connections, brass bowl - up to 70°C, without scale ring
D06FI-... B =	With threaded male connections, stainless steel filter bowl - up to 70°C
D06F, FI-... E =	Without fittings, with clear filter bowl - up to 40°C
D06FN, FH... F =	Without fittings, with brass filter bowl - up to 70°C

7. Assembly

7.1 Installations Guidelines

- Install in horizontal pipework with filter bowl downwards.
- Install shutoff valves
- The device downstream should be protected by means of a safety valve (installed downstream of the pressure reducing valve).
- The installation location should be protected against frost and be easily accessible
  o Pressure gauge can be read off easily
  o With clear filter bowl, degree of contamination can be easily seen
  o Simplified maintenance and cleaning
- For residential applications where maximum protection against dirt is required, install a fine filter upstream of the pressure reducing valve
- Provide a straight section of pipework of at least five times the nominal valve size after the pressure reducing valve (in accordance with DIN 1988, Part 5)

7.2 Assembly instructions

1. Thoroughly flush pipework
2. Fit venturi nozzle (1 $^1/_4$" / 2" only)
3. Install pressure reducing valve
   o Note flow direction
   o Install without tension or bending stresses

8. Commissioning

8.1 Setting outlet pressure

Set outlet pressure min. 1 bar under inlet pressure.

1. Close shutoff valve on inlet
2. Release pressure on outlet side (e.g. through water tap)
3. Close shutoff valve on outlet
4. Loosen slotted screw
   o Do not remove slotted screw
5. Slacken tension in compression spring
   o Turn control handle to the left (-) until it does not move any more
6. Slowly open shutoff valve on inlet
7. Turn control handle until the setting scale shows the desired value
8. Retighten slotted screw
9. Slowly open shutoff valve on outlet

9. Maintenance

We recommend a planned maintenance contract with an installation company

In accordance with DIN 1988, part 8, the following measures must be taken:

9.1 Inspection

Frequency: once annually
To be carried out by an installation company or the operator.

1. Close shutoff valve on outlet
2. Check back pressure using a pressure meter when there is zero through-flow
   o If the pressure is increasing slowly, the valve may be dirty or defective. In this instance, carry out servicing and cleaning
3. Slowly open shutoff valve on outlet

9.2 Maintenance

Frequency: every 1-3 years (depending on local operating conditions)
To be carried out by an installation company

1. Close shutoff valve on inlet
2. Release pressure on outlet side (e.g. through water tap)
3. Close shutoff valve on outlet
4. Loosen slotted screw
   o Do not remove slotted screw

Caution !
There is a spring in the spring bonnet. It may cause injuries if the spring is derailing.
- Make sure tension in compression spring is slakkened!

5. Slacken tension in compression spring
   o Turn control handle to the left (-) until it does not move any more
6. Unscrew spring bonnet
   o Use double ring wrench ZR06K
7. Remove slip ring
8. Remove valve insert with a pair of pliers
9. Unscrew filter bowl
   o Use double ring wrench ZR06K
10. Remove slotted ring
11. Check that sealing ring, edge of nozzle and slotted ring are in good condition, and if necessary replace the entire valve insert
12. Remove filter, clean and reinsert
13. Place O-ring onto filter bowl
14. Reassemble in reverse order

Press in diaphragm with finger before inserting slip ring
Screw in filter cup hand-tight (without tools)

15. Set outlet pressure

9.3 Adjusting the setting scale

If the adjustment knob is removed, this setting is lost. A new setting can be achieved using a pressure gauge.

1. Close shutoff valve on inlet
2. Release pressure on outlet side (e.g. through water tap)
3. Close shutoff valve on outlet
4. Loosen slotted screw
   o Do not remove slotted screw
5. Fit manometer
6. Slowly open shutoff valve on inlet
7. Set desired outlet pressure (e.g. 4 bar)
8. Align scale (e.g. 4) in middle of viewing window
9. Retighten slotted screw
10. Slowly open shutoff valve on outlet

9.4 Cleaning

Caution !
Do not use any cleaning agents containing solvents and/or alcohol to clean the plastic parts!
Cleaning agents can lead to water damage!

If necessary, the filter bowl and the filter can be cleaned.

To be carried out by an installation company or the operator.

Detergents must not be allowed to enter the environment or the sewerage system!

1. Close shutoff valve on inlet
2. Release pressure on outlet side (e.g. through water tap)
3. Close shutoff valve on outlet
4. Unscrew filter bowl
   o Use double ring wrench ZR06K
5. Remove filter, clean and reinsert
6. Place O-ring onto filter bowl
7. Screw in filter cup hand-tight (without tools)
8. Slowly open shutoff valve on inlet
9. Slowly open shutoff valve on outlet

10. Disposal

The pressure reducing valve comprises:

- Stainless steel
- Steel
- Plastic

Observe the local requirements regarding correct waste recycling/disposal!

11. Troubleshooting

Problem	Cause	Remedy
Beating sounds	Pressure reducing valve is too large	Call our Technical Customer Services
Water is escaping from the spring bonnet	Diaphragm in valve insert is faulty	Replace valve insert
Too little or no water pressure	Shutoff valves up- or downstream of the pressure reducing valve are not fully open	Open the shutoff valves fully
	Pressure reducing valve is not set to the desired outlet pressure	Set outlet pressure
	Filter in pressure reducing valve is contaminated	Clean or replace filter
	Pressure reducing valve is not fitted in flow direction	Fit pressure reducing valve in flow direction (note direction of arrow on housing)
The outlet pressure set does not remain constant	Filter in pressure reducing valve is contaminated or worn	Clean or replace filter
	Valve insert, sealing ring or edge of nozzle is contaminated or worn	Replace valve insert
	Rising pressure on outlet (e.g. in boiler)	Check check valve, safety group etc.

12. Spare Parts

1	Spring bonnet complete with setting scale D06F, D06FI	1/2" + 3/4"	0901515
		1" + 1 1/4"	0901516
		1 1/2" + 2"	0901518
	Spring bonnet complete with setting scale D06FH, D06F-1/4ZA	1/2" + 3/4"	0900227
		1" + 1 1/4"	0900228
		1 1/2" + 2"	0900229
	Spring bonnet complete with setting scale D06FN	1/2" + 3/4"	0900153
		1" + 1 1/4"	0900154
		1 1/2" + 2"	0900155
2	Valve insert complete D06F, D06FH (without filter)	1/2" + 3/4"	D06FA-1/2
		1" + 1 1/4"	D06FA-1B
		1 1/2" + 2"	D06FA-11/2
	Valve insert complete D06FN (without filter)	1/2" + 3/4"	D06FNA-1/2
		1" + 1 1/4"	D06FNA-1B
		1 1/2" + 2"	D06FNA-11/2
	Valve insert complete D06FI (without filter)	1/2" + 3/4"	D06FI-1/2
		1" + 1 1/4"	D0FI-1
		1 1/2" + 2"	D06FI-11/2
3	Union seal washer (10 pcs.)	1/2"	0901443
		3/4"	0901444
		1"	0901445
		1 1/4"	0901446
		1 1/2"	0901447
		2"	0901448
4	Blanking plug with O-ring R 1/4" (5 pcs.)		S06K-1/4
5	Replacement filter insert D06F, D06FI	1/2" + 3/4"	ES06F-1/2A
		1" + 1 1/4"	ES06F-1B
		1 1/2" + 2"	ES06F-11/2A
	Replacement filter insert D06FH, D06FN	1/2" + 3/4"	ES06F-1/2A
		1" + 1 1/4"	ES06F-1A
		1 1/2" + 2"	ES06F-11/2A
6	O-ring set for D06FI (10 pcs.)	1/2" + 3/4"	0901246
		1" + 1 1/4"	0901499
		1 1/2" + 2"	0901248
7	Clear filter bowl with O-ring D06F, D06FI	1/2" + 3/4"	SK06T-1/2
		1" + 1 1/4"	SK06T-1B
		1 1/2" + 2"	SK06T-11/2
	Brass filter bowl with O-ring D06F, D06FH, D06FN	1/2" + 3/4"	SM06T-1/2
		1" + 1 1/4"	SM06T-1B
		1 1/2" + 2"	SM06T-11/2
	Stainless steel filter bowl with O-ring D06FI	1/2" + 3/4"	SI06T-1/2
		1" + 1 1/4"	SI06T-1
		1 1/2" + 2"	SI06T-11/2

13. Accessories

FN09S **HABEDO ® Retrofit filter**
Reverse-rinsing filter for retro-conversion to a filter combination unit of pressure reducing valves

M07M **Pressure gauge**
Housing diameter 63 mm, rear connection thread G 1/4". Ranges: 0 - 4, 0 - 10, 0 - 16 or 0 - 25 bar. Please indicate upper value of pressure range when ordering

ZR06K **Double ring wrench**
For removal of spring bonnet and filter bowl

RV277 **Inlet check valve**
Available in sizes R 1/2" - 2"

VST06-A **Connection set**
Threaded connections

VST06-B **Connection set**
Solder connections

VST06I-A **Connection set**
With stainless steel threaded connections

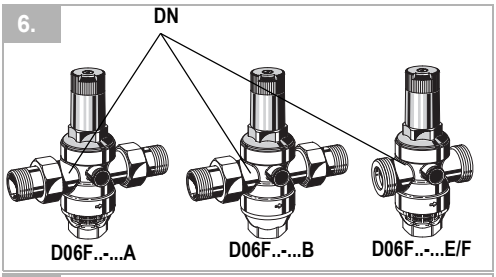
6.
DN
D06F..-...A
D06F..-...B
D06F..-...E/F

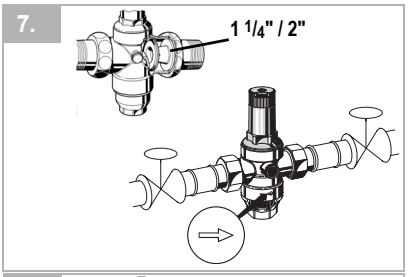
7.
1 1/4" / 2"

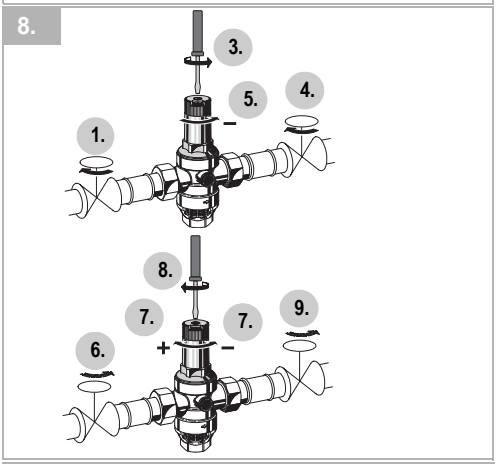
8.
1.
3.
4.
5.
6.
7.
8.
9.

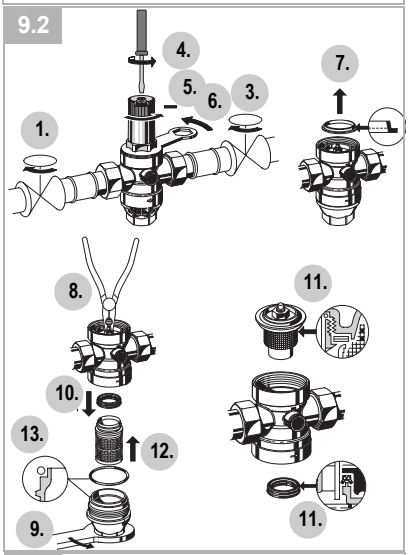
9.2
1.
3.
4.
5.
6.
7.
8.
9.
10.
11.
12.
13.

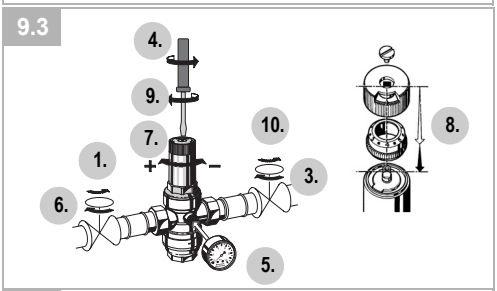
9.3
1.
3.
4.
5.
6.
7.
8.
9.
10.

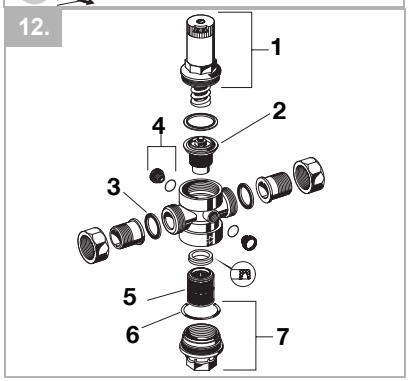
12.
1
2
3
4
5
6
7

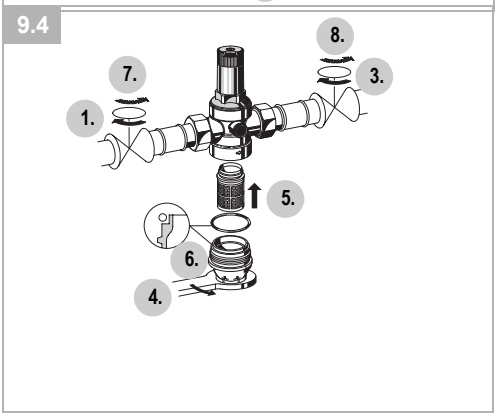
9.4
1.
3.
4.
5.
6.
7.
8.

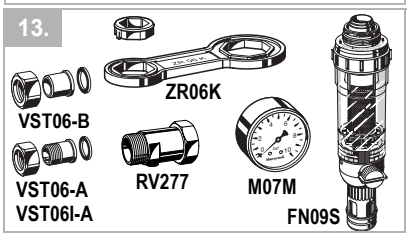
13.
VST06-B
ZR06K
VST06-A
VST06I-A
RV277
M07M
FN09S

D

1. Sicherheitshinweise 2
2. Funktionsbeschreibung 2
3. Verwendung 2
4. Technische Daten 2
5. Lieferumfang 2
6. Varianten 2
7. Montage 2
8. Inbetriebnahme 3
9. Instandhaltung 3
10.Entsorgung 4
11.Störungen / Fehlersuche 4
12.Ersatzteile 5
13.Zubehör 5

GB

1. Safety Guidelines 6
2. Functional description 6
3. Application 6
4. Technical data 6
5. Scope of delivery 6
6. Options 6
7. Assembly 6
8. Commissioning 7
9. Maintenance 7
10.Disposal 8
11.Troubleshooting 8
12.Spare Parts 9
13.Accessories 9

F

1. Consignes de sécurité 10
2. Description fonctionnelle 10
3. Mise en oeuvre 10
4. Caractéristiques 10
5. Contenu de la livraison 10
6. Variantes 10
7. Montage 10
8. Mise en service 11
9. Maintenance 11
10.Matériel en fin de vie 12
11.Défaut / recherche de panne 12
12.Pièces de rechange 13
13.Accessoires 13

NL

1. Veiligheidsvoorschriften 14
2. Functiebeschrijving 14
3. Gebruik 14
4. Technische gegevens 14
5. Leveringsomvang 14
6. Modellen 14
7. Montage 14
8. Ingebruikstelling 15
9. Onderhoud 15
10.Afvoer 16
11.Storing / Opzoeken en verhelpen van fouten 16
12.Reserveonderdelen 17
13.Accesoires 17

I

1. Avvertenze di sicurezza 18
2. Descrizione del funzionamento 18
3. Uso 18
4. Dati tecnici 18
5. Fornitura 18
6. Varianti 18
7. Montaggio 18
8. Messa in funzione 19
9. Manutenzione 19
10.Smaltimento 20
11.Guasti / Ricerca guasti 20
12.Pezzi di ricambio 21
13.Accessori 21

E

1. Indicaciones de seguridad 22
2. Descripión de funcionamiento 22
3. Rango de aplicación 22
4. Datos técnicos 22
5. Suministro 22
6. Suministro 22
7. Montaje 22
8. Puesta en servicio 23
9. Mantenimiento 23
10.Residuos 24
11.Fallo / localización de anomalías 24
12.Recambios 25
13.Accesorios 25

FIN

14.Turvallisuusohjeita 26
15.Toiminnan kuvaus 26
16.Käyttö 26
17.Tekniset tiedot 26
18.Toimituslaajuus 26
19.Toimituslaajuus 26
20.Asennus 26
21.Käyttöönotto 27
22.Huolto- ja ylläpito 27
23.Käytöstä poisto 28
24.Häiriöt / Virheenetsintä 28
25.Varaosat 29
26.Lisätarvikkeet 29

RUS

1. Указания по технике безопасности 30
2. Описание работы 30
3. Применение 30
4. Технические характеристики 30
5. Объем поставки 30
6. Объем поставки 30
7. Монтаж 30
8. Ввод в эксплуатацию 31
9. Уход 31
10.Утилизация 32
11.Неисправности / устранение 32
12.Запасные части 33
13.Принадлежности 33

PL

1. Wskazówki bezpieczeDstwa 34
2. Opis funkcji 34
3. Zastosowanie 34
4. Dane techniczne 34
5. Zakres dostawy 34
6. Warianty 34
7. Montaż 34
8. Uruchomienie 35
9. Utrzymywanie w dobrym stanie 35
10.Usuwanie 36
11.Zakłócenia / poszukiwanie usterek 36
12.Części zamienne 37
13.Wyposażenie dodatkowe 37

P

1. Indicações de segurança 38
2. Descrição de funcionamento 38
3. Utilização 38
4. Características técnicas 38
5. Volume de fornecimento 38
6. Volume de fornecimento 38
7. Montagem 38
8. Colocação em funcionamento 39
9. Conservação 39
10.Eliminação 40
11.Avaria / Localização de defeitos 40
12.Peças sobressalentes 41
13.Acessórios 41

N

1. Retningslinjer for sikkerhet 42
2. Beskrivelse av virkemåte 42
3. Anvendelse 42
4. Tekniske data 42
5. Leveringsomfang 42
6. Tilleggsutstyr 42
7. Montering 42
8. Ferdigstilling 43
9. Vedlikehold 43
10.Avfallshåndtering 44
11.Feilsøking 44
12.Reservedeler 45
13.Tilbehør 45

TR

1. Güvenlik Uyarıları 46
2. Fonksiyonların Tanımı 46
3. Kullanımı 46
4. Teknik Veriler 46
5. Teslimat Kapsamı 46
6. Varyantlar 46
7. Montaj 46
8. İşletime Alma 47
9. Bakım 47
10.İmha 48
11.Arıza/Hata Arama 48
12.Yedek Parçalar 49
13.Aksesuarlar 49

APPENDIX 8 Hydac Technology – Hydraulic Accumulator

(Left blank intentionally)

Diaphragm accumulators welded types

Part no.:: 3107029
Product description: SBO50-4E1/342U-50AB

Characteristic	Value / Characteristic / Information
Material- Accumulator shell	Stainless steel 1.4571
Material- Diaphragm	NBR
Material- Fluid connection	Stainless steel 1.4571
Nominal volume	4,000 l
Permissible operating pressure	50,00 bar
Product sub-division	Accumulator Division
Series	SBO50
Type code (gas side)	Rechargeable with M28x1,5*
Type of connection (fluid)	Male and Female thread*

HYDAC INTERNATIONAL

Diaphragm Accumulators

1. DESCRIPTION

1.1. FUNCTION

Fluids are practically incompressible and cannot therefore store pressure energy.

The compressibility of a gas is utilised in hydro-pneumatic accumulators for storing fluids. HYDAC diaphragm accumulators are based on this principle, using nitrogen as the compressible medium.

The diaphragm accumulator consists of a fluid section and a gas section with the diaphragm acting as a gas-proof screen.

The fluid section is connected with the hydraulic circuit, so that the diaphragm accumulator draws in fluid when pressure increases and the gas is compressed. When the pressure drops, the compressed gas expands and forces the stored fluid into the circuit.

At the base of the diaphragm is a valve poppet. This shuts off the hydraulic outlet when the accumulator is completely empty and thus prevents damage to the diaphragm.

NOTE:

When fitted with a HYDAC Safety & Shut-off Block HYDAC diaphragm accumulators comply with the regulations of the Pressure Equipment Directive PED 97/23/EC and the German industrial safety regulations BetrSichV.

Please refer to brochure:
Safety & Shut-Off Block SAF/DSV
no. 3.551

1.2. CONSTRUCTION

HYDAC diaphragm accumulators are available in two versions.

1.2.1 Weld type

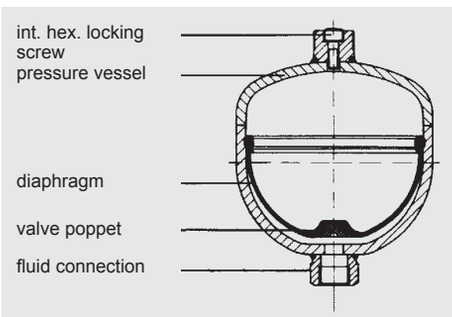

This consists of:

- Welded pressure vessel, rechargeable on the gas side or, alternatively, completely sealed. Fluid connection available in various types.
- Flexible diaphragm to separate the fluid and gas sections.
- Valve poppet set into the base of the diaphragm

1.2.2 Screw type

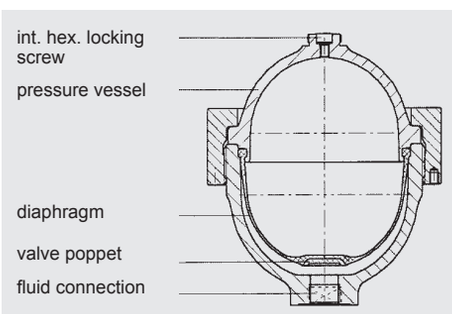

This consists of:

- Forged upper section with gas charging connection.
- Forged lower section with fluid connection.
- Exchangeable flexible diaphragm to separate the gas and fluid.
- Vulcanized valve poppet set into the base of the diaphragm.
- Lock nut to hold the upper and lower sections of the accumulator together.

1.2.3 Diaphragm materials

The diaphragms are available in the following elastomers:

- NBR (acrylonitrile butadiene rubber, PERBUNAN)
- IIR (butyl rubber)
- FKM (fluoro rubber, VITON®)
- ECO (ethylene oxide epichlorohydrin rubber).

The material used depends on the respective operating medium and temperature.

When selecting the elastomer, allowances must be made for the fact that the gas can cool down to below the permissible elastomer temperature if there are adverse discharge conditions (high pressure ratio p_2/p_0, rapid discharge speed). This can cause cold cracking in the elastomer. The gas temperature can be calculated using the HYDAC Accumulator Simulation Programm ASP.

1.2.4 Corrosion protection

For use with chemically aggressive fluids the accumulator can be supplied with corrosion protection, such as plastic coating or a galvanic or chemical surface protection. If this is insufficient, then stainless steel accumulators are available in nearly all types.

The options detailed in points 1.2.3. and 1.2.4. allow these accumulators to be used with mineral oils, non-flam fluids and numerous chemically aggressive fluids.

1.3. MOUNTING POSITION

Optional; however, if there is a risk of contamination collecting, a vertical position is preferable, with the fluid connection at the bottom.

1.4. TYPE OF MOUNTING

Accumulators up to 2 l can be screwed directly inline.

- Where strong vibrations are expected, the accumulator must be secured to prevent it working loose. For weld type accumulators we recommend HYDAC support clamps. For screw type accumulators with lock nut, a suitable support console can be found in our brochure "Supports for Hydraulic Accumulators" no. 3.502.
- Additional male threads on the hydraulic connection are available for screwing into mounting holes - see point 3.1.
- Please see brochure section:
  - Supports for hydraulic accumulators, no. 3502

1.5. GENERAL

1.5.1 **Operating pressure**
See tables 3.1. and 3.2.

In some countries the permissible operating pressure can differ from the nominal pressure.

1.5.2 **Nominal volume**
See tables 3.1. and 3.2.

1.5.3 **Effective gas volume**
Corresponds to the nominal volume of the diaphragm accumulator.

1.5.4 **Effective volume**
Volume of fluid available between the operating pressures p_2 and p_1.

1.5.5 **Fluids**
Mineral oils, hydraulic oils.
Other fluids on request.

1.5.6 **Gas charging**
Use only nitrogen when charging diaphragm accumulators, never oxygen **(risk of explosion).**

All accumulators are supplied with a protective pre-charge.
Higher gas pre-charge pressures are available on request
(Gas charging screw or sealed gas connection).

1.5.7 Permissible operating temperature
-10 °C ... +80 °C
263 K ... 353 K
for material code 112.
Others on request.

1.5.8 **Permissible pressure ratio**
Ratio of max. operating pressure p_2 to gas pre-charge pressure p_0.

1.5.9 **Max. flow rate of the pressure fluid**
It is necessary to ensure that a residual fluid volume of approx. 10% of the effective gas volume remains in the accumulator if the max. flow rate given in the tables is to be achieved.

1.5.10 **Certificate codes**
Hydraulic accumulators which are installed in countries outside Germany are supplied with the test certificates required in that country. The user country must be stated at the time of ordering.

HYDAC pressure vessels can be supplied with virtually any test certificate.

The permissible operating pressure can differ from the nominal pressure.

The following table contains the codes used in the model code for different countries:

Australia	F [1)]
Brazil	U [3)]
Canada	S1 [2)]
China	A9
CIS	A6
EU member states	U
Hungary	U [3)]
India	U [3)]
Japan	P
New Zealand	T
Poland	U
Romania	U [3)]
Slovakia	U
South Africa	U [3)]
Switzerland	U [3)]
USA	S
others on request	

1) = approval required in the individual territories
2) = approval required in the individual provinces
3) = alternative certificates possible

On no account must any welding, soldering or mechanical work be carried out on the accumulator shell. After the hydraulic line has been connected it must be completely vented.

Work on systems with accumulators (repairs, connecting pressure gauges etc) must only be carried out once the pressure and fluid have been released.
Please read Instruction Manual!
No. 3.100.CE

Note:
Application examples, accumulator sizing and extracts from approvals regulations on hydraulic accumulators can be found in the accumulator overview brochure no. 3.000

2. TECHNICAL SPECIFICATIONS

2.1. MODEL CODE
(also order example)

SBO210 - 2 E1 / 112 U - 210 AK 050

Series

Nominal volume (litres)

Type [2)]
E1 = weld type, standard model, rechargeable (M28x1.5)
E2 = weld type, sealed gas connection
with gas pre-charge as requested [4)]
E3 = weld type, gas valve M16x1.5,
rechargeable
A6 = screw type (exchangeable diaphragm),
standard model,
rechargeable (M28x1.5)
A3 = screw type (exchangeable diaphragm),
gas valve M16x1.5,
rechargeable

Material code [2)]
depending on operating medium
112 =standard for mineral oil

Fluid connection
1 = carbon steel
3 = stainless steel 1.4571 (316)
4 = carbon steel with surface protection [1)]
6 = low temperature steel

Accumulator shell
0 = plastic coated
1 = carbon steel
2 = carbon steel with surface protection [1) 3)]
4 = stainless steel 1.4571 (316)
6 = low temperature steel

Accumulator diaphragm
2 = NBR 20 (acrylonitrile butadiene)
3 = ECO (ethylene oxide epichlorohydrin)
4 = IIR (butyl)
5 = NBR 21 (low temperature NBR)
6 = FKM (fluoro rubber)
7 = others (on request)

Certificate code [2)]
U = PED 97/23/EC
(for other countries see table 2.2.10)

Permissible operating pressure (bar)

Fluid connection [2)] **form**
Standard connection = AK or AB
e.g. Form AK = G ¾
for SBO 210-2 according to table on page 5

Please state gas pre-charge pressure p_0 at 20 °C [4)]

1) only for screw type
2) not all combinations are possible
3) only parts in contact with the medium
4) only for type E1 or E2, for scheduled orders

3. DIMENSIONS

3.1. WELD TYPE ACCUMULATORS – non-exchangeable diaphragm –

Type E1
Form AK

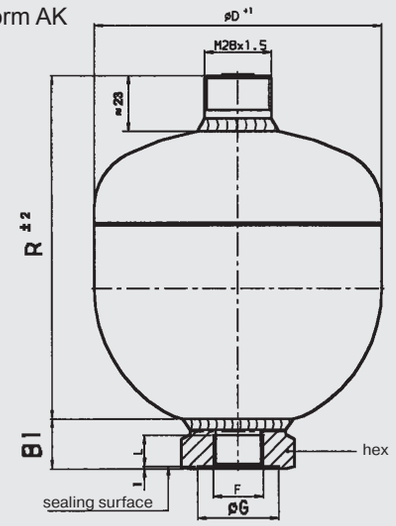

Type E2

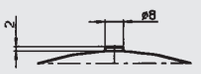

Type E3

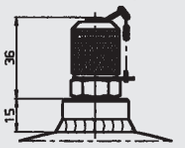

Form AB

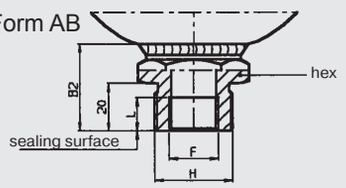

Alternative fluid connection on request
Examples:

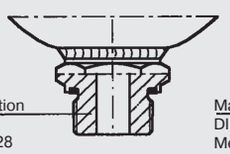

Male threaded connection
DIN 3852 Form E
Metric thread or ISO 228

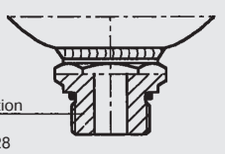

Male threaded connection
DIN 3852 Form F
Metric thread or ISO 228

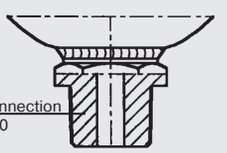

Male threaded connection
NPT to ANSI B1.20

Nominal volume[1]	Perm-issible pressure ratio	Series	User country U		R	Ø D	Weight	Q [2]	Standard fluid connection									
			perm. working pressure [bar]						Form AK					Form AB				
			carbon steel	stainless steel					F ISO 228	Ø G	L	B1	hex. SW	F ISO 228	H DIN 13	L	B2	hex. SW
[l]	p2 : p0				[mm]	[mm]	[kg]	[l/min]		[mm]	[mm]	[mm]				[mm]	[mm]	
0.075	8 : 1	250	250	–	91	64	0.7	38	G 1/2	–	14	21	30	not available				
0.16		210	210	180	103	74	0.8											
		300	300	–	108	78	1.1											
0.32		210	210	160	116	93	1.3	95										
		300	300	–	120	96	1.8											
0.5		160	160	–	130	102	1.3											
		210	210	–	133	105	1.7											
0.6		330	330	–	151	115	3.3			34			41	G 1/2	M33x1.5	14	36	41
0.7		100	100	–	151	106	1.8											
0.75	8 : 1	140	140	–	142	116	1.8											
		210	210	140	147	121	2.8											
		250	250	–	152	126	3.6									15	42	
		330	330	–	140	126	4.0					26						
1		200	200	–	159	136	3.6					21				14	36	
	4 : 1	250	250	–	192	126	4.4											
		330	330	–	169		4.8					26				15	42	
1.4	8 : 1	140	140	–	173	145	3.9					21				14	36	
		210	210	–	178	150	5.4											
		250	250	–	185	153	5.9									15		
		330	330	–	172	155	7.6					33					42	
2	8 : 1	100	100	100	190	160	4.0	150	G 3/4	44	16	28	46	G 3/4	M45x1.5	16	33	46
		210	210	–	198	167	6.6											
	4 : 1	250	250	–	232	153	7.4											
	8 : 1	330	330	–	181	172	9.2					43					42	
2.8	4 : 1	210	210	–	250	167	8.2					28					33	
		250	250	–	250	170	7.8											
		330	330	–	237	172	11.0					43					42	
3.5		250	210	–	306	170	11.2					28					33	
		330	330	–	274	172	13.8					44					42	
4		50	–	50	294	158	5.0										33	
		250	–	180	306	170	11.2											

1) others on request, 2) max. flow rate

3.2. THREAD TYPE – exchangeable diaphragm –

Type A6 (Standard)

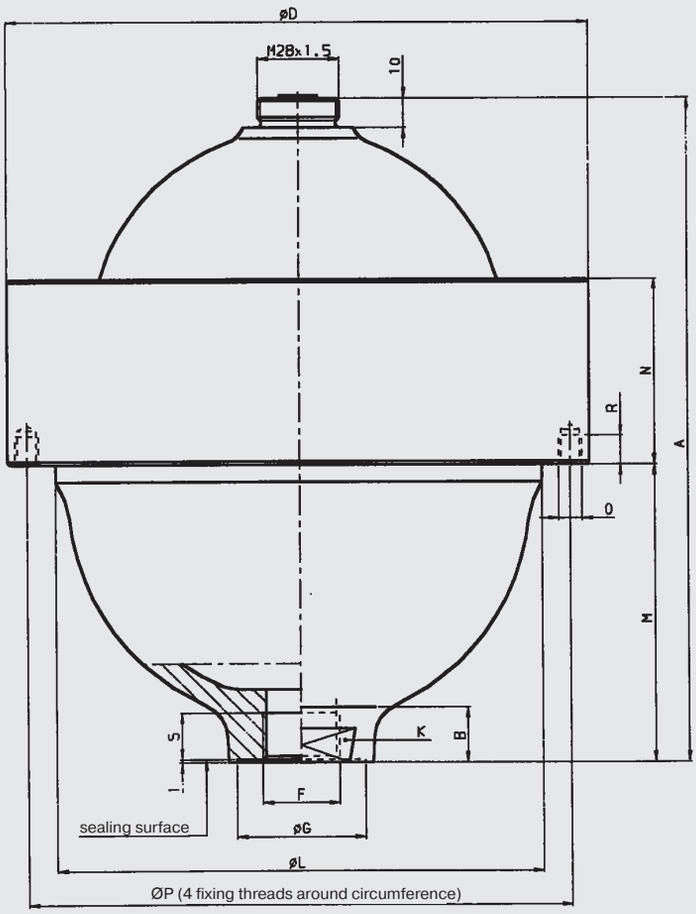

Type A3

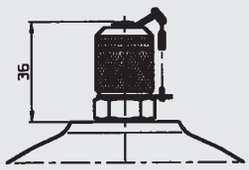

Nominal volume[1] [l]	Permissible pressure ratio $p_2:p_0$	Series	User country U – Per. working pressure (bar): Carbon steel	User country U – Per. working pressure (bar): Stainless steel	Weight [kg]	A [mm]	B [mm]	ØD [mm]	ØL [mm]	M [mm]	N [mm]	O	ØP [mm]	R [mm]	Q[2] [l/min]	Standard fluid connection – Form AK: F ISO 228	S [mm]	ØG [mm]	K SW
0.1	10 : 1	500	500	–	1.9	110	30	95	–	53	35	–	–	–	95	G 1/2	14	–	32
0.25				–	3.9	129	20	115	92	56	56								36
			–	350	4.9		2	125			60								
		750	750	750	9.0	136	11	153	114	57.5	63							27	
0.6		450	450	250	5.7	170	19	140	115	68	57							34	41
1.3		400	400	–	11.2	212	28	199	160	97	65	M8	180	10	150	G 3/4	16	44	50
2		250	250	180	11.4	227	17	201	168	101	64		188						
2.8		400	400	–	22.0	257	30	252	207	106	80		230						50
4				–	34.0	284		287	236	127,5	90		265						

[1] others on request
[2] max. flow rate

4. NOTE

The information in this brochure relates to the operating conditions and applications described. For applications or operating conditions not described, please contact the relevant technical department.
Subject to technical modifications.

HYDAC Technology GmbH
Industriegebiet
D-66280 Sulzbach/Saar
Tel.: 0 68 97 / 509 - 01
Fax: 0 68 97 / 509 - 464
Internet: www.hydac.com
E-Mail: speichertechnik@hydac.com

APPENDIX 9 Leser – Safety Valve

(Left blank intentionally)

Type 437

Normal-Feder-Sicherheitsventil

Safety Relief Valve spring loaded

für Dämpfe, Gase und Flüssigkeiten
for steam, gases and liquids

Zusatzausrüstungen

Heizmantel
Teller mit Dichtplatte

Anschlüsse

NPT Gewindeanschlüsse
Gewindemuffen
Flanschanschlüsse nach DIN/ANSI
Weitere Anschlüsse auf Anfrage

Accessories

Heating jacket
Disc with sealing plate

Connections

NPT screwed connections
female screwed connections
flange connections acc. to DIN/ANSI
further connections on request

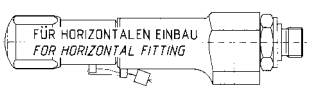

nur mit Austritt nach unten
only with outlet in direction downstairs

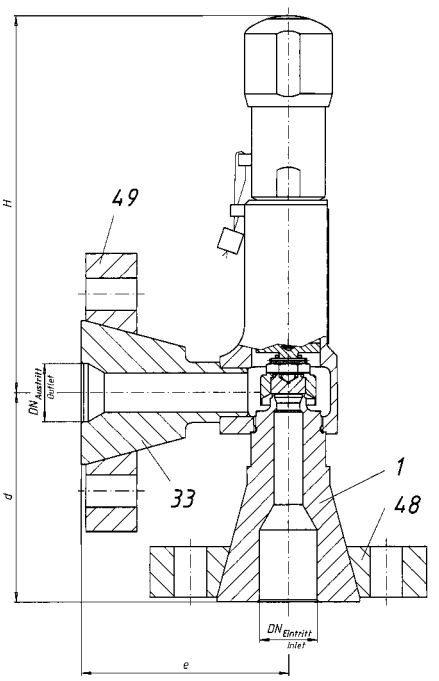

Type 437
mit Flanschen
with flanges
- Eintritt: Losflansch-Ausführung
  Inlet: Slip on flange design
- Austritt: Vorschweißflansch
  Outlet: Welding neck flange

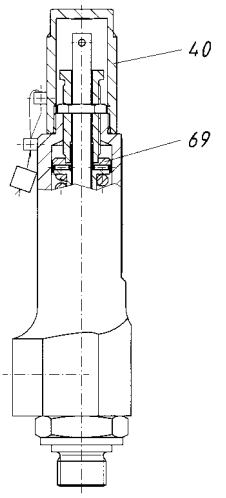

Type 437
mit gasdichter Kappe H2
with gastight cap H2

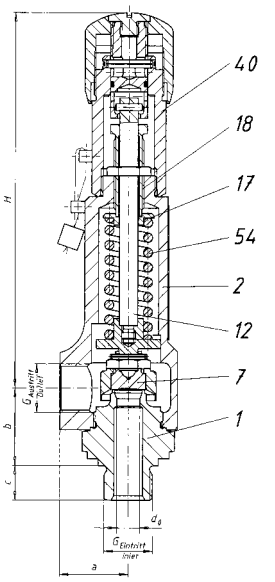

Type 437
mit Anlüftung H4, gasdicht,
Teller anlüftbar
lifting device H4, gastight,
disc liftable

Zulassungen / *Approvals*

EG-Bautelprüfnr./*EC-type examination no.* 07 202 0111 Z00080/21	**Dämpfe/Gase** / ***Steam/Gases***	**D/G** / ***S/G***	**Flüssigkeiten** / ***Liquids***	**F** / ***L***
TÜV (AD-A2, TRD 421, VdTÜV SV 100) Listennr./*Approval number*	980			
d_o [mm]	6	10	6	10
Ausflussziffer/*Coefficient of discharge* α_d	0,72	0,50	–	0,35
Öffnungscharakteristik/*Opening characteristic*	Normal/*Standard*		Normal/*Standard*	
ASME/NB (ASME Sec. VIII Div. 1) Nr./*No.* Ausflussziffer/*Coefficient of discharge K*	in Vorbereitung *under preparation*		in Vorbereitung *under preparation*	
Weitere/*Others* siehe Seite/*refer to page* 2/40-41	DGR/PED DNV DIN GOST ISPESL KISCO UDT GL TMB			

Eintrittskörperwerkstoff *Inlet body material*			**Temperatureinsatzgrenze** [1] *Temperature range* [1]								**Artikelnummer** *Article number*			
DIN EN		ASME	DIN EN				ASME					**d_O [mm]**		
Werkstoffbezeichnung *Material Designation*	Werkstoff-Nr. *Material No.*		von *from*		bis *to*		von *from*		bis *to*			**6**	**10**	
			[°C]	[°F]	[°C]	[°F]	[°C]	[°F]	[°C]	[°F]		**Long Version**	**Standard**	**Long Version**
X 14 CrMoS 17	1.4104	430F	-10	+14	+220	+428	-29	-20	+220	+428	**4373**	–	.260*	.261*
X 2 CrNiMo 17-12-2	1.4404 [1) 2)]	316L	-270	-454	+280	+536	-268	-450	+280	+536	**4374**	.312*	.314*	.315*

* Bitte hier gewünschte Ziffer für Kappe oder Anlüftung anfügen:
2 = Kappe **H2** 4 = Anlüftung **H4** (gasdicht)
1) Zwischen -10 °C und der niedrigsten, angegebenen Anwendungstemperatur ist gemäß AD-Merkblatt W10 zu verfahren.

Änderungen behalten wir uns vor.

* *Please add number for the required cap or lifting device:*
*2 = Cap **H2** 4 = Lifting device **H4** (gastight)*
1) *Between -10 °C and lowest temperature indicated "AD-Merkblatt" W10 shall be taken into account.*

Modifications reserved.

Abmessungen, Druckbereiche, Gewichte / *Dimensions, Pressure Ranges, Weights*

							Long Version	Standard	Long Version
Nennweite, Ventilgröße		***Nominal Diameter, Valve size***		**d_o**	**mm**		**6**	**10**	**10**
Druckstufe Eintritt		*Pressure rating inlet*		PN			400	320	
Druckstufe Austritt		*Pressure rating outlet*		PN			250	160	
Eintritt Zapfen		*Inlet male*			–		G $^1/_2$; G $^3/_4$		
Austritt Muffe		*Outlet female*			–		G $^1/_2$ [1]		
Min. Ansprechdruck	4373	*Min. Set pressure*	*4373*	p	bar/*bar g*		–	0,1	93
	4374		*4374*	p	bar/*bar g*		180	0,1	68
Max. Ansprechdruck	4373	*Max. Set pressure*	*4373*	p	bar/*bar g*		–	93	390
	4374		*4374*	p	bar/*bar g*		330	68	320
Engster Strömungsquerschnitt		*Flow area*		A_o	mm^2		28,3	78,5	78,5
Engster Strömungsdurchmesser		*Flow diameter*		d_o	mm		6	10	10
Schenkellänge	Austritt	*Centre to face dimension*	*outlet*	a	mm		30	30	30
	Eintritt		*inlet*	b	mm		33	33	33
Zapfenlänge	G $^1/_2$	*Length*	*G $^1/_2$*	c	mm		15		
	G $^3/_4$		*G $^3/_4$*	c	mm		16		
Flanschausführung	Austritt	*Flanged Version*	*outlet*	d	mm		100		
	Eintritt		*inlet*	e	mm		100		
Bauhöhe	H2 4373	*Height*	*H2 4373*	H	mm		–	137	158
	H4 4373		*H4 4373*	H	mm		–	162	183
	H2 4374		*H2 4374*	H	mm		158	137	158
	H4 4374		*H4 4374*	H	mm		168	162	183
Gewicht		*Weight*		–	kg		1,4	1,2	1,4

[1] Anschlüsse mit Innendurchmesser < 16 mm sind nicht zulässig!

[1] Connections with inside diameter < 16 mm are not allowed!

Werkstoffe /*Materials*

Pos. *Item*	Bauteile	*Parts*	4373 Chromstahl/*chrome steel* Werkstoff Nr. *material no.*	ASME	4374 korrosionsfest/*corrosion resistant* kaltzäh/*cryogenic* Werkstoff Nr. *material no.*	ASME
1	Eintrittskörper	*Body (base)*	1.4104	430F	1.4404 [1]	316L [1]
2	Austrittsgehäuse	*Outlet body*	1.4104	430F	1.4404	316L
7	Teller	*Disc*	1.4122	420RM	1.4404 [1]	316L [1]
12	Spindel	*Spindle*	1.4021	420	1.4404	316L
16	Federteller	*Spring plate*	1.4104	430F	1.4404	316L
18	Druckschraube mit Buchse	*Adjusting screw with bush*	1.4104 PTFE + 15 % Glas	430F	1.4404 PTFE + 15 % Glas	316L
54	Feder	*Spring*	1.4310	302	1.4310	302
40	Kappe H2	*Cap H2*	1.0718	steel	1.4404	316L
	Anlüftung H4	*Lifting device H4*	1.4104	430F	1.4404	316L

[1] d_o 6 gepanzert

[1] d_o 6 stellited

Leistungstabelle /*Discharge capacities*

d_o (mm)	6			10		
p	I	II	III	I	II	III
0,1				14	16	0,6
0,5				28	35	1,1
1,0				41	52	1,5
2,0				67	85	2,1
3,0				90	115	2,5
4,0				112	145	2,9
5,0				134	174	3,3
6,0				156	203	3,6
8,0				200	262	4,2
10,0				243	321	4,6
15,0				353	468	5,7
20,0				462	615	6,6
25,0				572	762	7,3
30,0				683	909	8,0
40,0				907	1203	9,3
50,0				1137	1497	10,0
60,0				1372	1791	11,0
70,0				1612	2084	12,0
80,0				1859	2378	13,0
100,0				2373	2966	15,0
150,0				3788	4436	18,0
180,0		2757			5317	20,0
200,0		3061				
250,0		3823				
300,0		4585				
330,0		5042				

Berechnung entsprechend DIN 3320, AD-Merkblatt A2, TRD 421 *Calculation of mass flow according to DIN 3320, AD-Merkblatt A2, TRD 421*		
p	Ansprechüberdruck *Set pressure*	bar/*bar g*
I	Sattdampf, Abblasen gegen Atmosphärenüberdruck *Sat. steam valve discharging to atmospheric pressure*	kg/h
II	Luft bei 0°C, Abblasen gegen Atmosphärenüberdruck *Air at 32°F valve discharging to atmospheric pressure*	m^3_n/h
III	Wasser bei 20°C *Water at 68°F*	10^3 kg/h

Zuerkannte Ausflussziffer α_d /*Coefficent of discharge α_d*

Diagramm 1 $\alpha_d = f(h/d_o)$

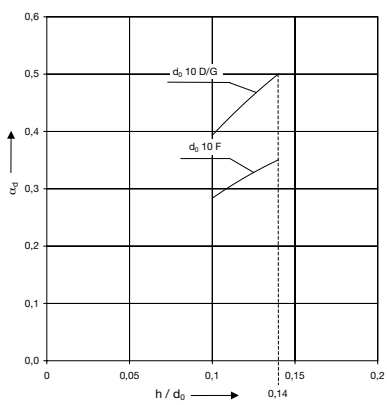

Diagramm 2 $\alpha_d = f(p_{a0}/p_o)$

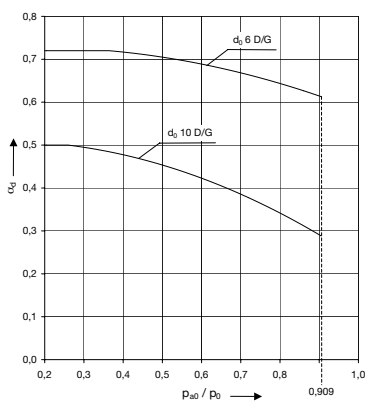

Type 438

Normal-Feder-Sicherheitsventil mit Weichdichtung

Safety Relief Valve spring loaded with soft seal

für Dämpfe, Gase und Flüssigkeiten
for steam, gases and liquids

Zusatzausrüstungen

Heizmantel

Anschlüsse

NPT Gewindeanschlüsse
Gewindemuffen
Flanschanschlüsse nach DIN/ANSI
Weitere Anschlüsse auf Anfrage

Accessories

Heating jacket

Connections

NPT screwed connections
female screwed connections
flange connections acc. to DIN/ANSI
further connections on request

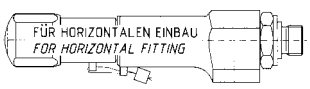

nur mit Austritt nach unten
only with outlet in direction downstairs

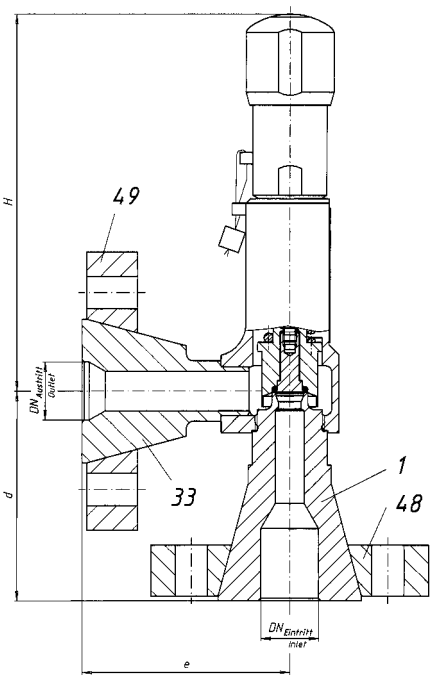

Type 437
mit Flanschen
with flanges
- Eintritt: Losflansch-Ausführung
Inlet: Slip on flange design
- Austritt: Vorschweißflansch
Outlet: Welding neck flange

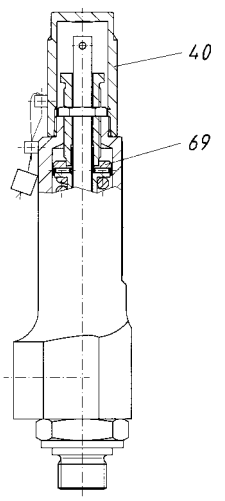

Type 438
mit gasdichter Kappe H2
with gastight cap H2

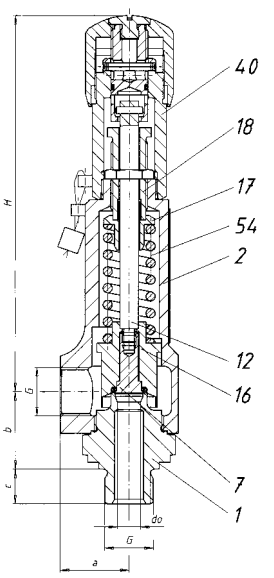

Type 438
mit Anlüftung H4, gasdicht,
Teller anlüftbar
lifting device H4, gastight,
disc liftable

Zulassungen / *Approvals*

EG-Bauteilprüfnr./*EC-type examination no.* 07 202 0111 Z00080/21	**Dämpfe/Gase D/G** ***Steam/Gases S/G***	**Flüssigkeiten F** ***Liquids L***
TÜV (AD-A2, TRD 421, VdTÜV SV 100)	980	
Listennr./*Approval number* d_o [mm]	10	10
Ausflussziffer/*Coefficient of discharge* α_d	0.40	0.33
Öffnungscharakteristik/*Opening characteristic*	Normal/*Standard*	Normal/*Standard*
ASME/NB (ASME Sec. VIII Div. 1)		
Nr./*No.*	in Vorbereitung *under preparation*	in Vorbereitung *under preparation*
Ausflussziffer/*Coefficient of discharge K*		
Weitere/*Others* siehe Seite/*refer to page* 2/40-41	DGR/PED DNV DIN GOST ISPESL KISCO UDT GL TMB	

Eintrittskörperwerkstoff *Inlet body material*			**Temperatureinsatzgrenze** [1] *Temperature range* [1]								**Artikelnummer** *Article number*		
DIN EN		ASME	DIN EN				ASME					**d_O [mm]**	
Werkstoffbezeichnung *Material Designation*	Werkstoff-Nr. *Material No.*		von *from*		bis *to*		von *from*		bis *to*			**10**	
			[°C]	[°F]	[°C]	[°F]	[°C]	[°F]	[°C]	[°F]		**Standard**	**Long Version**
X 14 CrMoS 17	1.4104	430F	-10	+14	+150	+302	-29	-20	+150	+302	**4383**	.286*	.287*
X 2 CrNiMo 17-12-2	1.4404	316L	-45	-49	+150	+302	-268	-450	+150	+302	**4384**	.298*	.299*

[1] Maßgebend ist der gewählte Elastomer-Werkstoff, s. Katalog Seite 13/20.

* Bitte hier gewünschte Ziffer für Kappe oder Anlüftung anfügen:
2 = Kappe **H2** 4 = Anlüftung **H4** (gasdicht)
Bei Bestellung bitte Artikelnummer entsprechend Bestellbeispiel im Teil 1, Ansprechdruck und O-Ring-Werkstoff (Seite 9/13) angeben.

Hohe Dichtheit: Helium-Leckrate bis 2,6 • 10^{-8} mbar • l/s.

Änderungen behalten wir uns vor.

[1] *Decisive is the chosen elastomer material, ref. to catalogue page 13/20.*

* *Please add number for the required cap or lifting device:*
*2 = Cap **H2** 4 = Lifting device **H4** (gastight)*
Please state article number corresponding to the example for ordering in section 1, set pressure and O-ring material (page 9/13).

High tightness: leakage rate up to 2,6 • 10^{-8} mbar • l/s tested on helium.

Modifications reserved.

Abmessungen, Druckbereiche, Gewichte / *Dimensions, Pressure Ranges, Weights*

							Standard	Long Version
Nennweite, Ventilgröße			***Nominal Diameter, Valve size***		d_O	**mm**	**10**	**10**
Druckstufe Eintritt			*Pressure rating inlet*		PN		250	
Druckstufe Austritt			*Pressure rating outlet*		PN		160	
Eintritt Zapfen			*Inlet male*			–	G $^1/_2$; G $^3/_4$	
Austritt Muffe			*Outlet female*			–	G $^1/_2$ [1]	
Min. Ansprechdruck		4383	*Min. Set pressure*	*4383*	p	bar/*bar g*	0,10	93
		4384		*4384*	p	bar/*bar g*	0,10	68
Max. Ansprechdruck		4383	*Max. Set pressure*	*4383*	p	bar/*bar g*	93	180
		4384		*4384*	p	bar/*bar g*	68	180
Engster Srömungsquerschnitt			*Flow area*		A_O	mm^2	78,5	78,5
Engster Strömungsdurchmesser			*Flow diameter*		d_O	mm	10	10
Schenkellänge		Austritt	*Centre to face dimension*	*outlet*	a	mm	30	30
		Eintritt		*inlet*	b	mm	33	33
Zapfenlänge		G $^1/_2$	*Length*	*G $^1/_2$*	c	mm	15	
		G $^3/_4$		*G $^3/_4$*	c	mm	16	
Flanschausführung		Austritt	*Flanged version*	*outlet*	d	mm	100	
		Eintritt		*inlet*	e	mm	100	
Bauhöhe	H2	4383	*Height*	*H2* *4383*	H	mm	137	158
	H4			*H4*	H	mm	162	183
	H2	4384		*H2* *4384*	H	mm	137	158
	H4			*H4*	H	mm	162	183
Gewicht			*Weight*		–	kg	1,2	1,4

[1] Anschlüsse mit Innendurchmesser < 16 mm sind nicht zulässig!

[1] Connections with inside diameter < 16 mm are not allowed!

Werkstoffe /*Materials*

Pos. *Item*	Bauteile	*Parts*	4383 Chromstahl/*chrome steel* Werkstoff Nr. *material no.*	ASME	4384 korrosionsfest/*corrosion resistant* kaltzäh/*cryogenic* Werkstoff Nr. *material no.*	ASME
1	Eintrittskörper	*Body (base)*	1.4104	430F	1.4404	316L
2	Austrittsgehäuse	*Outlet body*	1.4104	430F	1.4404	316L
7	Teller mit Weichdichtung	*Disc with soft seal*	1.4122	420RM	1.4404	316L
12	Spindel	*Spindle*	1.4021	420	1.4404	316L
16	Federteller	*Spring plate*	1.4104	430F	1.4404	316L
18	Druckschraube mit Buchse	*Adjusting screw with bush*	1.4104 PTFE + 15 % Glas	430F	1.4404 PTFE + 15 % Glas	316L
54	Feder	*Spring*	1.4310	302	1.4310	302
40	Kappe H2 Anlüftung H4	*Cap H2 Lifting device H4*	1.0718 1.4104	steel 430F	1.4404 1.4404	316L 316L

Leistungstabelle /*Discharge capacities*

Berechnung entsprechend DIN 3320, AD-Merkblatt A2, TRD 421
Calculation of mass flow according to DIN 3320, AD-Merkblatt A2, TRD 421

p	Ansprechüberdruck *Set pressure*	bar/*bar g*
I	Sattdampf, Abblasen gegen Atmosphärenüberdruck *Sat. steam valve discharging to atmospheric pressure*	kg/h
II	Luft bei 0°C, Abblasen gegen Atmosphärenüberdruck *Air at 32°F valve discharging to atmospheric pressure*	m^3_n/h
III	Wasser bei 20°C *Water at 68°F*	10^3 kg/h

d_O (mm)	10			d_O (mm)	10		
p	I	II	III	p	I	II	III
0,1	15,8	18,2	0,59	14,0		351	5,18
0,2	19,4	22,4	0,72	15,0		374	5,36
0,5	27,5	32,2	1,02	20,0		492	6,19
1,0	36,9	44,0	1,38	25,0		609	6,92
2,0	56,6	68,2	1,96	30,0		727	7,58
3,0	75,7	92,.2	2,40	40,0		962	8,75
4,0	94,0	115,7	2,77	50,0		1197	9,79
5,0		139	3,09	60,0		1432	10,72
6,0		163	3,39	70,0		1668	11,58
7,0		186	3,66	80,0		1903	12,38
8,0		210	3,91	100,0		2373	13,84
9,0		233	4,15	150,0		3549	16,95
10,0		257	4,38	180,0		4254	18,57
12,0		304	4,79				

Zuerkannte Ausflussziffer α_d
Coefficent of discharge α_d

$$\alpha_d = f(p_{ao}/p_o)$$

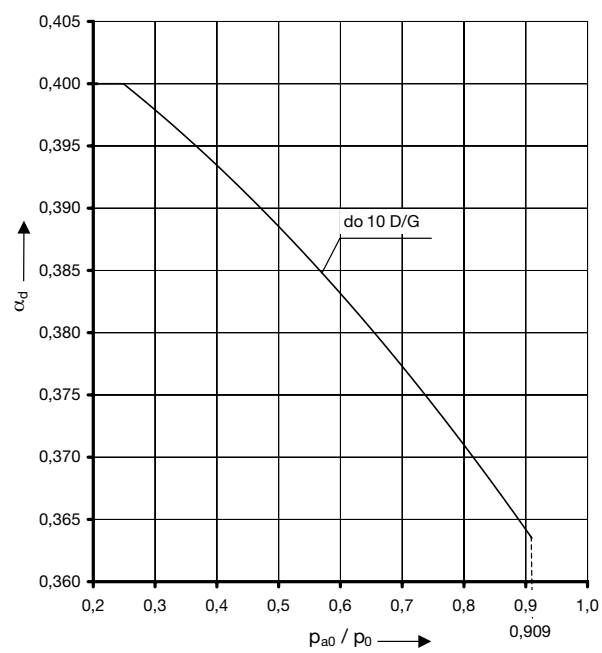

APPENDIX 10 Pall Corporation – Water Filter

10.1 IDL Series Filter Housings

10.2 Claris® Series Filter Cartridges

(Left blank intentionally)

IOL and IDL Single-round Industrial Housings

Top: IOL Series Filter Housing
Bottom: IDL Series Filter Housing

Pall IOL and IDL Single-round Housings are constructed of stainless steel and are designed for industrial applications (such as filtration of fluids in utilities areas).

IOL Style - Features and Benefits

- Single cartridge housing accepts AB style, single open-end filter elements
- All stainless steel materials of construction
- Accepts 5 in. (127 mm), 10 in. (254 mm), 20 in. (508 mm) or 30 in. (7620 mm) Code 3, Code 7, Code 8 or Code 18 Filter Cartridges
- Quick opening T-Handle V-Band Clamp facilitates Filter Change Out
- Wide Choice of Inlet and Outlet sizes and O-ring Seal options
- Passivated for purity.

IDL Style - Features and Benefits

- Single cartridge housings accepts Double open-end, RF and MCY 1000 Style Filters
- All Stainless Steel materials of construction
- Accepts 4 in. (102 mm), 10 in. (254 mm), 20 in. (508 mm) and 30 in. (762 mm) lengths
- 2 Closure Styles offered — Through Bolt or V-band Clamp
- V-Band Clamp Style features a Quick Opening T-Handle
- Variety of Inlet and Outlet sizes and O-ring Seal Options Offered
- Optional Mounting Brackets available

Nominal Dimensional Data

Model	Typical Flow Rate[1]	Height	Clearance Required	Volume	Weight Empty	
					Threaded Nozzle	Flanged Nozzle
IOL Series						
IOL05	19 L/min (5 gal/min)	198 mm (7.8 in.)	102 mm (4 in.)	0.4 L (0.10 gals)	2.3 kg (5.1 lbs)	5.4 kg (11.9 lbs)
IOL31	38 L/min (10 gal/min)	419 mm (16.5 in.)	321 mm (12.6 in.)	1.6 L (0.42 gals)	2.7 kg (5.9 lbs)	5.8 kg (12.8 lbs)
IOL32	76 L/min (20 gal/min)	667 mm (26.3 in.)	572 mm (22.5 in.)	3.1 L (0.82 gals)	3.1 kg (6.9 lbs)	6.2 kg (13.7 lbs)
IOL33	114 L/min (30 gal/min)	918 mm (36.1 in.)	822 mm (32.4 in.)	4.6 L (1.22 gals)	3.6 kg (7.9 lbs)	6.7 kg (14.7 lbs)
IOL71	38 L/min (10 gal/min)	419 mm (16.5 in.)	321 mm (12.6 in.)	1.6 L (0.42 gals)	2.7 kg (5.95 lbs)	5.8 kg (12.8 lbs)
IOL72	76 L/min (20 gal/min)	667 mm (26.3 in.)	572 mm (22.5 in.)	3.1 L (0.82 gals)	3.1 kg (6.9 lbs)	6.2 kg (13.7 lbs)
IOL73	114 L/min (30 gal/min)	918 mm (36.1 in.)	822 mm (32.4 in.)	4.6 L (1.22 gals)	3.6 kg (7.9 lbs)	6.7 kg (14.7 lbs)
IOL81/IOL181	38 L/min (10 gal/min)	419 mm (16.5 in.)	321 mm (12.6 in.)	1.6 L (0.42 gals)	2.7 kg (5.95 lbs)	5.8 kg (12.8 lbs)
IOL82/IOL182	76 L/min (20 gal/min)	667 mm (26.3 in.)	572 mm (22.5 in.)	3.1 L (0.82 gals)	3.1 kg (6.9 lbs)	6.2 kg (13.7 lbs)
IOL83/IOL183	114 L/min (30 gal/min)	918 mm (36.1 in.)	822 mm (32.4 in.)	4.6 L (1.22 gals)	3.6 kg (7.9 lbs)	6.7 kg (14.7 lbs)
IDL Series						
IDLD04	15 L/min (4 gal/min)	203 mm (8 in.)	153 mm (6 in.)	0.4 L (0.11 gals)	2.3 kg (5.1 lbs)	5.4 kg (11.9 lbs)
IDLD1	38 L/min (10 gal/min)	362 mm (14.2 in.)	321 mm (12.6 in.)	1.3 L (0.34 gals)	2.6 kg (5.7 lbs)	5.7 kg (12.5 lbs)
IDLD2	76 L/min (20 gal/min)	516 mm (24.2 in.)	572 mm (22.5 in.)	2.8 L (0.74 gals)	3.1 kg (6.7 lbs)	6.1 kg (13.5 lbs)
IDLD3	114 L/min (30 gal/min)	870 mm (34.2 in.)	822 mm (32.4 in.)	4.3 L (1.14 gals)	3.5 kg (7.7 lbs)	6.6 kg (14.5 lbs)
IDL104	15 L/min (4 gal/min)	203 mm (8 in.)	153 mm (6 in.)	0.4 L (0.11 gals)	2.3 kg (5.1 lbs)	5.4 kg (11.9 lbs)
IDL11	38 L/min (10 gal/min)	362 mm (14.2 in.)	321 mm (2.6 in.)	1.3 L (0.34 gals)	2.6 kg (5.7 lbs)	5.7 kg (12.5 lbs)
IDL12	76 L/min (20 gal/min)	516 mm (24.2 in.)	572 mm (22.5 in.)	2.8 L (0.74 gals)	3.1 kg (6.7 lbs)	6.1 kg (13.5 lbs)
IDL13	114 L/min (30 gal/min)	870 mm (34.2 in.)	822 mm (32.4 in.)	4.3 L (1.14 gals)	3.5 kg (7.7 lbs)	6.6 kg (14.5 lbs)
IDLT04	15 L/min (4 gal/min)	200 mm (7.8 in.)	153 mm (6 in.)	0.4 L (0.11 gals)	2.3 kg (5.1 lbs)	5.4 kg (11.9 lbs)
IDLT1	38 L/min (10 gal/min)	359 mm (14.1 in.)	321 mm (12.6 in.)	1.3 L (0.34 gals)	2.6 kg (5.7 lbs)	5.7 kg (12.5 lbs)
IDLT2	76 L/min (20 gal/min)	613 mm (24.1 in.)	572 mm (22.5 in.)	2.8 L (0.74 gals)	3.1 kg (6.7 lbs)	6.1 kg (13.5 lbs)
IDLT3	114 L/min (30 gal/min)	867 mm (34.1 in.)	822 mm (32.4 in.)	4.3 L (1.14 gals)	3.5 kg (7.7 lbs)	6.6 kg (14.5 lbs)

[1] Dependent on inlet and outlet selection.

IOL and IDL Single-round Industrial Housings

Technical Specifications

Materials of Construction

Head	316L Stainless Steel
Bowl	316 Stainless Steel

Design Ratings

IOL	17.9 barg (260 psig) @ 40 °C (100 °F) 13.8 barg (200 psig) @ 150 °C (300 °F)
IDL	**Through Bolt Design:** 8.2 barg (120 psig) @ 40 °C (100°F)
	V-band Clamp Design: 17.9 barg (260 psig) @ 40 °C (100 °F) 13.8 barg (200 psig) @ 150 °C (300 °F)

Note: Above ratings apply to housing only. Cartridge and housing O-ring selection may impose different and narrower limitations.

Connections

Inlet and Outlet	**Both Styles:** 19 mm (0.375 in.) NPT, 25 mm (1 in.) NPT, 19 mm (0.375 in.) BSPT, 25 mm (1 in.) BSPT,
	IOL Only: 25 mm (1 in.) BSPP
Flange Option	300 lbs. ANSI raised face flanges for 25 mm (1 in.) IOL and IDL Housings or BS4504 flanges for 25 mm (1 in.) IDL Housings
Vent and Drain	6 mm (0.25 in.) NPT, BSPT or BSPP
Shell O-rings	Viton* A, FEP Encapsulated Viton A, Silicone Elastomer, Buna N, Ethylene Propylene, Ethylene
Propylene for Steam Service Bracket Option	Stainless steel brackets are available as a standard option

* Viton is a registered trademark of DuPont Dow Elastomers L.L.C (non-FDA material).

Typical Air Flow Rates at 20 °C (68 °F)

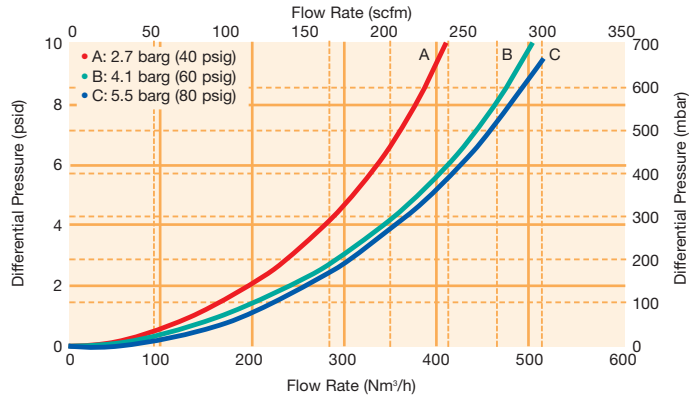

Typical Liquid Flow Rates

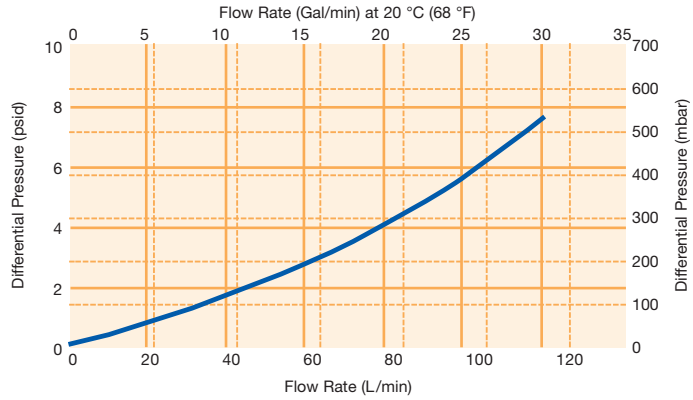

Ordering Information

IOL ☐ ☐ **G** ☐ ☐

Code	Cartridge Style
3	Code 3
5	Code 5
8	Code 8
18	Code 18

Code	Nominal Cartridge Length
05	5 in. (127 mm)
1	10 in. (254 mm)
2	20 in. (508 mm)
3	30 in. (762 mm)

Code	Inlet and Outlet	Vent and Drain
N12	19 mm (¾ in.) NPT	6 mm (0.25 in.) NPT
N16	25 mm (1 in.) NPT	6 mm (0.25 in.) NPT
B12	19 mm (¾ in.) BSPT	6 mm (0.25 in.) BSPT
B16	25 mm (1 in.) BSPT	6 mm (0.25 in.) BSPT
B17	25 mm (1 in.) ANSI Flange	6 mm (0.25 in.) BSPT
N17	25 mm (1 in.) ANSI Flange	6 mm (0.25 in.) NPT
P17	25 mm (1 in.) ANSI Flange	6 mm (0.25 in.) BSPP
P19	25 mm (1 in.) BSPP	6 mm (0.25 in.) BSPP
B35	25 mm (1 in.) BS4504 Flange	6 mm (0.25 in.) BSPT
P35	25 mm (1 in.) BS4504 Flange	6 mm (0.25 in.) BSPP

Code	Seal Materials
H	Viton A
H1	FEP Encapsulated Viton A
H4	Silicone
H13	Buna N
J	Ethylene Propylene
J7	Ethylene Propylene for Steam Service

IDL ☐ ☐ **G** ☐ ☐ ☐ ☐

Code	Cartridge Style
D	DOE/RF V-band
1	MCY 1001 V-band
T	DOE/RF Through Bolt

Code	Nominal Cartridge Length
04	4 in. (102 mm)
1	10 in. (254 mm)
2	20 in. (508 mm)
3	30 in. (762 mm)

Code	Inlet and Outlet, Vent and Drain
See above IOL Style table	

Code	Housing Options
–	Blank
C2	Passivated
C9	Clean for Oxygen Service

Code	Seal Materials
See above IOL Style table	

FILTERITE® CB MICRO-CARBON® II SERIES FILTER CARTRIDGES

High Efficiency Carbon Block Filtration

- Economical Alternative to Granular Activated Carbon Cartridges
- FDA Listed Materials Make this a Suitable Filter for Potable Water and Food Service Applications.
- High Porosity Design Maximizes Utilization of Carbon to Prevent Premature Plugging
- Patent-Pending Manufacturing Process Yields a Filter with Greater Dirt Holding Capacity.
- Up to Twice the Chlorine Removal Capacity of Competitive Carbon Block Filters
- DOE End Configuration

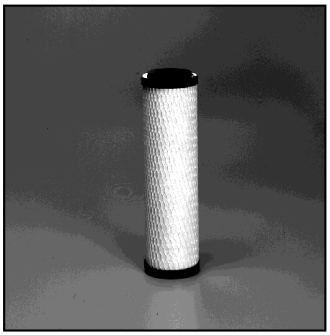

Performance Specifications

Retention Rating[1] (nominal):
5 µm

Initial Δ P (psi) @ Flow Rate (gpm):

9.75”/10”:	0.95 psi @ 1 gpm
20”:	0.85 psi @ 2 gpm

Chlorine Reduction[2] @ Flow Rate (gpm):

9.75”/10”:	>6,000 Gal. @ 1 gpm
20”:	>12,000 Gal. @ 2 gpm

Maximum Temperature:
40° F to 180° F (5° C to 83° C)

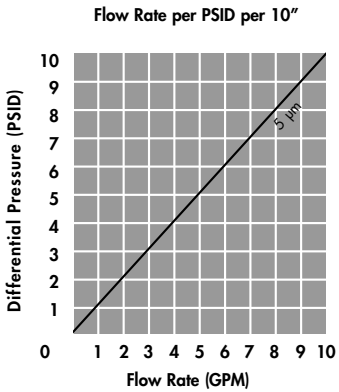

Flow rate is per 10” cartridge. For liquids other than water, multiply pressure drop by fluid viscosity in centipoise.

Product Specifications

Materials of Construction:

Filter Media:	Bonded Porous Activated Carbon With Polyethylene Binders[3]
End Caps:	Polypropylene
Inner/Outer Wraps:	Polypropylene
Netting:	Polyethylene
Gaskets:	Buna N

Dimensions (nominal):

Outside Diameter:	2.7” (6.9 cm)
Lengths:	9.75” (24.8 cm), 10” (25.4 cm), 20” (50.8 cm), 30” (76.2 cm)

Meets FDA Regulations:
Yes

[1] - Micron rating based on 85% or greater removal of a given particle size. Data obtained from actual particle counts using AC Fine Test Dust.
[2] - Estimated capacity using 3 ppm free available chlorine (FAC) at continuous flow to 0.1 ppm break through.
[3] - Take binders into consideration when determining chemical compatibility.

PALL Pall Corporation

FILTERITE CB MICRO-CARBON II SERIES FILTER CARTRIDGES

Applications

	Organics	Taste, Odor, Color	Chlorine	Particulate Removal
Water:				
Drinking	✔	✔	✔	✔
Bottle Washing	✔	✔	✔	✔
Rinse Water	✔	✔	✔	✔
Single Pass	✔	✔	✔	✔
Recirculating				Use Pre-filter
Chemicals:				
Single Pass	✔	✔		✔
Recirculating				Use Pre-filter

WARNING:

Do not use with water that is microbiologically unsafe or of unknown quality without adequate disinfection before or after the system.

NOTE:

These cartridges contain a very small amount of carbon fines (very fine black powder). After installation, flush the cartridge for a minimum of 5 minutes to remove all traces of the fines before using the water. You should run (flush) the tap at least 20 seconds prior to using water for drinking or cooking purposes. This is particularly important if the tap has not been used daily.

CAUTION:

Filter must be protected against freezing, which can cause cracking of the filter and water leakage.

Ordering Information

C | 20 | P | -CB | 5

Carbon

Cartridge Lengths (nominal):
9.75”, 10”, 20”, 30”

Micro-Carbon II

Series
CB

Retention Rating (nominal):
5 µm

USF FILTRATION & SEPARATIONS GROUP INC. REGISTERED NO. A2D41

USF FILTRATION & SEPARATIONS GROUP INC. REGISTERED NO. JQA-QMS209

USF FILTRATION & SEPARATIONS GROUP INC. REGISTERED NO. FM23897

FILTERITE and MICRO-CARBON are registered trademarks of Pall Corporation.

Pall Corporation

Filterite Division
2118 Greenspring Drive
Timonium, Maryland 21093

410.252.0800 phone
410.560.2857 fax
www.filterite.com website
filterite@pall.com e-mail

© 2002 Pall Corporation • All Rights Reserved • Printed In USA • 5/02 • 1M

1-800-FILTERS

*Filtration. Separation. Solution.*SM

APPENDIX 11 Shinko – Temperature & Pressure Controllers

11.1 Shinko Digital Controller Data Sheet

11.2 Shinko Digital Controller Instruction Manual

(Left blank intentionally)

DIGITAL INDICATING CONTROLLER

NEW PRODUCTS

ISO 9001
KEMA
CERT. No.60033
DUTCH COUNCIL FOR ACCREDITATION

Indicating Controller

ACS-13A

A Superior, Smaller Controller

Shinko

Point 1 Controller with the shortest depth (56mm)

Higher functions and performance have been achieved with the shortest depth of 56mm ACS-13A.
This provides cost and space reduction.

Actual size

Please use a gasket to reinforce Dust-proof/Drip-proof function.
Depth of control panel interior when gasket is used: 54.5mm

The shortest depth
56mm

Point 2 An easier viewing display with status color indication

The PV display color can be selected from red, green and orange.
The PV display color can also change continuously depending on deviation between PV and SV, which allows easy and distinct status checking.

PV display color
- Regular status: Green
- Regular status: Red
- Regular status: Orange
- Alarm OFF: Green, Alarm ON: Red
- Alarm OFF: Orange, Alarm ON: Red
- PV color changes continuously : Orange → Green → Red
- PV color changes continuously + Alarm ON (Red)

It is easier to see the SV and PV, using an 11-segment LCD display.

●PV color continuous change mode

PV is higher than [SV+PV color range]

PV is within [SV±PV color range]

PV is lower than [SV−PV color range]

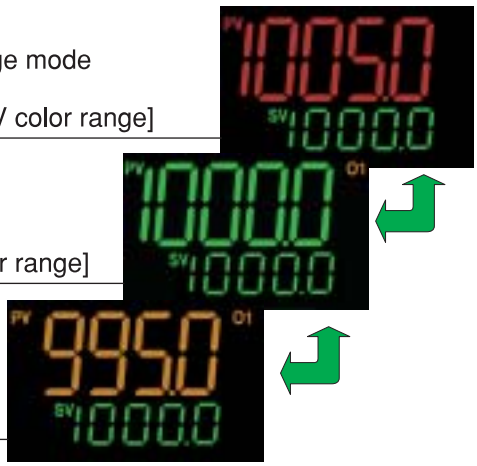

●Alarm color (when setting High/Low limits alarm)

Low limit alarm active　Regular status　High limit alarm active

All segments backlit　SENS　A1LM

Point 3 Versatile controls, specifications and enhancements

■4-point SV, using external selection

SV memory function, which can switch 4 points of SV using external contact signal, is equipped.
After registering the SVs (from SV1 to SV4), they can be easily switched by external operation.

■3-phase Heater burnout alarm

Any trouble in 3-phase heaters such as burnout or deterioration can be detected by connecting 2 CTs (current transformers).
Alarm types 20A and 50A are available for both single phase and 3-phase.

Point 4 User friendly communication: Remote monitoring, data transmission

Standard Console communication function enables 1 to 1 communication between a PC with USB port and the ACS-13A. Various settings and monitoring can be performed using the Console software SWS-ACS01M.

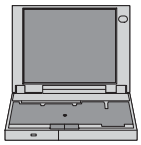

USB communication cable CMA

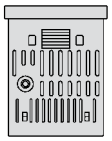

Displays of the Console software (SWS-ACS01M)

■Optional Serial communication (RS-485)

Serial communication (RS-485) between a PC/Touch panel unit and the ACS-13A enables various settings and remote monitoring. A maximum of 31 units in a centralized control system can be established.
Shinko protocol and Open Network Modbus protocol are usable.

●When monitoring multiple ACS-13A units with a PC or Touch panel unit

By connecting to the Touch panel unit, up to 31 points of temperature control can be easily monitored.
For a PC with RS-232C, a communication converter is required.
Touch panel units corresponding to the ACS-13A are as shown below.
Digital Electronics Corp. : GLC series, GP series
Hakko Electronics Co., Ltd. : V7 series, V6 series

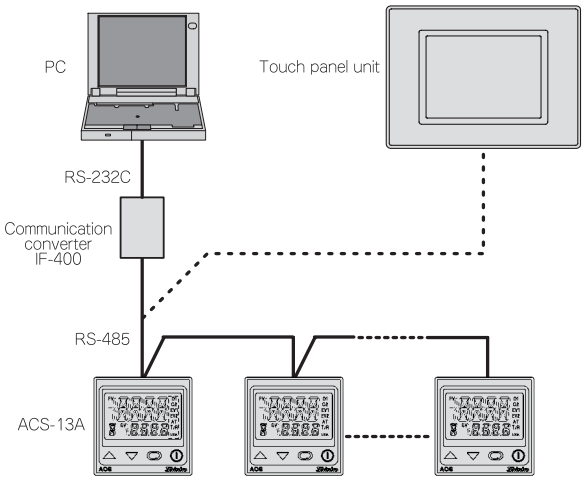

●When communicating with a PLC and up to 32 units of the ACS-13A

By connecting to a PLC via PLC interface unit SIF-400, up to 32 units of the ACS-13A can be connected.

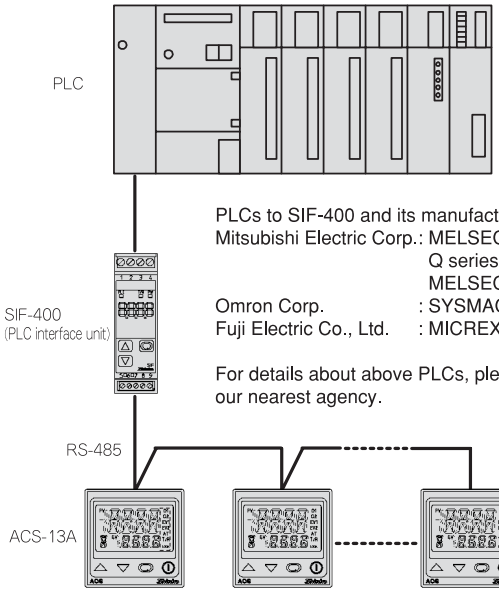

PLCs to SIF-400 and its manufacturer
Mitsubishi Electric Corp.: MELSEC A (A, AnA)
Q series, QnA series
MELSEC FX2N series
Omron Corp. : SYSMAC C200H series
Fuji Electric Co., Ltd. : MICREX-F series

For details about above PLCs, please contact us or our nearest agency.

Point 5 Dust-proof/Drip-proof function (IP66)

- Can be used in a dust or water splashed environment.
- **UL/C-UL, CE marking pending**

Point 6 Output rate of change limit

This function is suitable for heaters which are not designed for sudden changes in output (OUT1). This is suited for controlling heaters such as the Kanthal Super. This also stabilizes control by suppressing output fluctuation.

■Name and functions of the sections

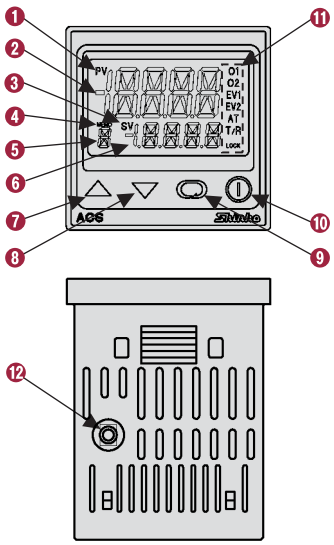

① PV indicator : Lights when the PV is indicated in the PV/SV display mode.
② PV display : Indicates the PV (process variable).
③ SV indicator : Lights when the SV is indicated in the PV/SV display mode.
④ MEMO indicator : Lights when Set value memory external selection (SM option) is added.
⑤ MEMO display : Indicates the Set value memory number.
⑥ SV display : Indicates the SV (set value).
⑦ Increase key : Increases the numeric value.
⑧ Decrease key : Decreases the numeric value.
⑨ Mode key : Selects the setting mode, or registers the set value.
To register the set (selected) value, press this key.
⑩ OUT/OFF key : Switches control output ON/OFF or Auto/Manual control function.
⑪ Action indicators
O1(OUT1): Lights when control output is ON or when Heating output (D□ option) is ON.
O2(OUT2): Lights when Cooling output (D□ option) is ON.
EV1 : Lights when Alarm 1 output is ON.
EV2 : Lights when Alarm 2 output (A2 option) is ON or when Heater burnout alarm (W, W3 option) is ON.
AT : Flashes while AT (auto-tuning) or auto-reset is performing.
T/R : Lights when Serial communication (C5 option) is performing (TX output).
LOCK : Lights when Lock 1, Lock 2 or Lock 3 is selected.
⑫ Console connector: The following operations can be conducted by connecting to the USB communication cable (Model: CMA, sold separately). (1) Reading and setting of SV, PID and various set values, (2) Reading of PV and action status and (3) Function change

Model name

ACS-13A □/□ □, □□□				ACS-13A（W48×H48×D62mm）
Control output (OUT1)	R			Relay contact 1a
	S			Non-contact voltage (for SSR drive)
	A			DC current
Input		M		Multi-input
Supply voltage				100 to 240V AC*
		1		24V AC/DC
Option			A2	Alarm 2
			C5	Serial communication (EIA RS-485)
			DR	Heating/Cooling control (relay output) — OUT2
			DS	Heating/Cooling control (SSR output) — OUT2
			SM	Set value memory external selection
			TC	Terminal cover
			W (20A)	Rated current: Single phase 20A — Heater burnout Alarm
			W (50A)	Rated current: Single phase 50A — Heater burnout Alarm
			W3 (20A)	Rated current: 3-phase 20A — Heater burnout Alarm
			W3 (50A)	Rated current: 3-phase 50A — Heater burnout Alarm

Designate the specification from the □ columns.

* For the power supply voltage, **100 to 240V AC is standard,** however, when ordering 24V AC/DC, enter "1" after the input code.

When adding options, punctuate them with a comma.

- If A2 option is specified, Heating/Cooling control output cannot be added.
- If C5 option is specified, Set value memory external selection cannot be added.
- If D□ option is specified, A2 and Heater burnout alarm cannot be added.
- If W or W3 option is specified, Heating/Cooling control output cannot be added.
- For DC current output type, W or W3 option cannot be added.

Rated range (Full multi-range)

Input type		Input range	
Thermocouple	K	−200 to 1370 ℃	−320 to 2500 ˚F
		−200.0 to 400.0℃	−320.0 to 750.0 ˚F
	J	−200 to 1000 ℃	−320 to 1800 ˚F
	R	0 to 1760 ℃	0 to 3200 ˚F
	S	0 to 1760 ℃	0 to 3200 ˚F
	B	0 to 1820 ℃	0 to 3300 ˚F
	E	−200 to 800 ℃	−320 to 1500 ˚F
	T	−200.0 to 400.0℃	−200.0 to 750.0 ˚F
	N	−200 to 1300 ℃	−320 to 2300 ˚F
	PL-Ⅱ	0 to 1390 ℃	0 to 2500 ˚F
	C(W/Re5-26)	0 to 2315 ℃	0 to 4200 ˚F
RTD	Pt100	−200 to 850 ℃	−320 to 1500 ˚F
		−200.0 to 850.0℃	−320.0 to 1500.0˚F
	JPt100	−200 to 500 ℃	−320 to 900 ˚F
		−200.0 to 500.0℃	−320.0 to 900.0 ˚F
DC current	4 to 20mA DC	−2000 to 10000	
	0 to 20mA DC		
DC voltage	0 to 1V DC		
	0 to 10V DC		
	1 to 5V DC		
	0 to 5V DC		

- For DC current and voltage input, scaling and decimal point place change are possible.
- For DC current input, connect 50Ω shunt resistor (sold separately) between input terminals.

Standard specifications

Display	PV display --------- 11-segment Backlight LCD Red/ Green /Orange, Character size, 12.0 x 5.4mm (H x W) SV display --------- 11-segment Backlight LCD Green, Character size, 6.0 x 3.5mm (H x W) MEMO display ---- 11-segment Backlight LCD Green, Character size, 4.8 x 2.8mm (H x W) Indicators-- Backlight Orange
Input	Thermocouple ---- K, J, R, S, B, E, T, N, PL-Ⅱ , C (W/Re5-26) External resistance: 100Ω or less, however, for B input, 40Ω or less RTD---------- Pt100, JPt100 3-wire system (Allowable input lead wire resistance: 10Ω or less per wire) DC current--------- 0 to 20mA DC, 4 to 20mA DC: Input impedance: 50Ω (50Ω shunt resistor must be connected between input terminals.) Allowable input current: 50mA DC or less (when 50Ω shunt resistor is used) DC voltage--------- 0 to 1V DC: Input impedance 1MΩ or more Allowable input voltage: 5V DC or less, Allowable signal source resistance: 2kΩ or less 0 to 5V DC, 1 to 5V DC, 0 to 10V DC: Input impedance: 100kΩ or more, Allowable input voltage: 15V DC or less Allowable signal source resistance: 100Ω or less
Accuracy (Setting・Indication)	Thermocouple---------- Within ±0.2% of each input span ±1digit, or within ±2℃ (4˚F), whichever is greater However, R, S input, the range is 0 to 200℃ (0 to 400˚F): Within ±6℃ (12˚F) B input, the range is 0 to 300℃ (0 to 600˚F): The accuracy is not guaranteed. K, J, E, T, N input, less than 0℃ (32˚F): Within ±0.4% of input span ±1digit RTD---------- Within ±0.1% of each input span±1digit, or within ±1℃ (2˚F), whichever is greater DC current, DC voltage -- Within ±0.2% of each input span±1digit
Input sampling period	0.25sec.
Control output (OUT1)	Relay contact ---------- 1a, control capacity: 3A 250V AC (resistive load), 1A 250V AC (inductive load cosϕ=0.4), Electric life: 100,000 times Non-contact voltage -- 12V DC±15% Max. 40mA DC (short circuit protected) DC current ---------- 4 to 20mA DC load resistance: Max. 550Ω
Control action	The following actions can be selected by keypad. (Default value: PID) PID (with auto-tuning function), PI, PD (with auto-reset function), P (with auto-reset function), ON/OFF OUT1 proportional band (P) --------- 0 to 1000℃ (2000˚F), 0.0 to 1000.0℃ (˚F), or 0.0 to 100.0% (ON/OFF action when set to 0 or 0.0) Integral time (I) ---------- 0 to 1000 seconds (Off when set to 0) Derivative time (D) ---------- 0 to 300 seconds (Off when set to 0) OUT1 ON/OFF action ---------- When set the proportional band to 0 or 0.0 OUT1 proportional cycle ---------- 1 to 120 seconds (Not available for DC current output type) ARW ---------- 0 to 100% OUT1 ON/OFF action hysteresis --- 0.1 to 100.0℃ (˚F) or 1 to 1000 OUT1 high limit setting ---------- 0 to 100% (DC current: -5 to 105%) OUT1 low limit setting ---------- 0 to 100% (DC current: -5 to 105%)
Alarm 1 output	Alarm types can be selected by keypad. (Default: No alarm action) ・No alarm action ・High limit alarm (Deviation setting) Setting range: −(Input span) to Input span ・Low limit alarm (Deviation setting) Setting range: −(Input span) to Input span ・High/Low limits alarm (Deviation setting) Setting range: 0 to Input span ・High/Low limit range alarm (Deviation setting) Setting range: 0 to Input span ・Process high alarm Setting range: Input range low limit value to Input range high limit value ・Process low alarm Setting range: Input range low limit value to Input range high limit value ・High limit alarm with standby (Deviation setting) Setting range: −(Input span) to Input span ・Low limit alarm with standby (Deviation setting) Setting range: −(Input span) to Input span ・High/Low limits alarm with standby (Deviation setting) Setting range: 0 to Input span When input is DC current or DC voltage, the input span is the same as the scaling span. When input is DC current or DC voltage, the input range low (or high) limit value is the same as the scaling low (or high) limit value. Setting accuracy------ The same as the indication accuracy Action---------- ON/OFF action Hysteresis---------- 0.1 to 100.0℃ (˚F) or 1 to 1000 Output---------- Relay contact 1a, Control capacity: 3A 250V AC (Resistive load), 1A 250V AC (Inductive load cosϕ=0.4), Electric life: 100,000 times
Supply voltage	100 to 240V AC 50/60Hz, 24V AC/DC 50/60Hz Allowable voltage fluctuation range: 85 to 264V AC, 20 to 28V AC/DC
Power consumption	Approx. 8VA
Insulation resistance	10MΩ or more, at 500V DC
Dielectric strength	Between Input terminal-Power terminal, Between Output terminal-Power terminal ----- 1.5kV AC for 1 minute
Environment	Ambient temperature: 0 to 50℃ Ambient humidity: 35 to 85%RH (non-condensing)
Case, Material, Color	Material: Flame resistant resin Color: Black
Mounting method	Mounting frame (Mountable control panel thickness: Within 1 to 5mm)
Setting method	Sheet key input
External dimensions	W48 x H48 x D62mm (Depth of control panel interior when gasket is used: 54.5mm)
Weight	Approx. 200g
Attached functions	Power failure countermeasure, Self-diagnosis, Automatic cold junction temperature compensation (only for thermocouple), Burnout, Input abnormality indication, Indication range, Control range, Warm-up indication, Auto/Manual control switching, Console communication
Accessories included	Mounting frame 1 piece, Gasket (Front mounted to the ACS-13A) 1 piece Instruction manual (A3 unfolded, English/Japanese) 1 copy CT (Current transformer): CTL-6S: 1 piece [W (20A) option] CTL-12-S36-10L1: 1 piece [W (50A) option] CTL-6S: 2 pieces [W3 (20A) option] CTL-12-S36-10L1: 2 pieces [W3 (50A) option]
Accessories sold separately	Terminal cover, 50Ω Shunt resistor (DC current input), USB communication cable CMA to which the Console software SWS-ACS01M is attached

■Optional specifications

Please specify options according to the users' needs. When ordering, specify an option code to be applied.

Alarm 2 output [A2]	Alarm type, Setting range and output type, etc. are the same as those of Alarm 1. See Alarm 1 output section. If this option is applied, Heating/Cooling control (D□ option) cannot be added. This option and Heater burnout alarm (W, W3 option) utilize common output terminals.
Heater burnout alarm [W, W3] (CT included)	Rating ---------- Single phase 20A [W(20A)], Single phase 50A [W(50A)], 3-phase 20A [W3(20A)], 3-phase 50A [W3(50A)] Must be specified. Setting range--------- Rated current 20A [W(20A), W3(20A)]: 0.0 to 20.0 A Rated current 50A [W(50A), W3(50A)]: 0.0 to 50.0 A Setting accuracy ---- Within ±5% of the rated value Action ---------- ON/OFF action Output ---------- Relay contact 1a, Control capacity: 3A 250V AC (resistive load), 1A 250V AC (inductive load cosϕ=0.4), Electric life: 100,000 times If this option is added, Heating/Cooling control (D□ option) cannot be added.
Heating/Cooling control [D□]	Heating control action: The same as the control output (OUT1) Cooling control action OUT2 proportional band (P) --- 0.0 to 10.0 times the control output (OUT1) proportional band (ON/OFF action when set to 0.0) OUT2 integral time (I) ---------- The same as that of the control output (OUT1) OUT2 derivative time (D) ------- The same as that of the control output (OUT1) OUT2 proportional cycle -------- 1 to 120 seconds Overlap/Dead band ---------- Thermocouple, RTD: −100.0 to 100.0℃ (˚F) DC current, DC voltage: −1000 to 1000 (The placement of the decimal point follows the selection) OUT2 hysteresis ---------- Thermocouple, RTD : 0.1 to 100.0℃ (˚F) OUT2 action mode ---------- One cooling action can be selected from Air cooling (linear characteristic), Oil cooling (1.5th power of the linear characteristic) and Water cooling (2nd power of the linear characteristic) by keypad. Output ---------- Relay contact 1a, Control capacity: 3A 250V AC (resistive load), 1A 250V AC (inductive load cosϕ=0.4), Electric life: 100,000 times Non-contact voltage 12V DC ±15% Max. 40mA DC (short circuit protected) If this option added, Alarm 2 (A2 option) and Heater burnout alarm (W, W3 option) cannot be added.
Serial communication [C5]	Various operations such as Reading and setting of various set values, Reading of PV and action status and Function change can be performed from the external PC. Communication interface ---------- EIA RS-485 Communication system ---------- Half-duplex communication start-stop synchronous Communication speed---------- 2400/4800/9600/19200bps (Can be selected by keypad) Data bit /Parity ---------- Data bit: 7or 8, Parity: Even/Odd /No parity (Can be selected by keypad) Stop bit ---------- 1 or 2 (Can be selected by keypad) Communication protocol ---------- Shinko/Modbus RTU/Modbus ASCII (Can be selected by keypad) Number of connectable units ----- Max. 31 units per host computer Communication error detection -- Parity, checksum, LRC (Modbus ASCII), CRC-16 (Modbus RTU) Data format

Communication protocol	Shinko protocol	Modbus ASCII	Modbus RTU
Start bit	1	1	1
Data bit	7	7 or 8	8
Parity	Yes (Even)	Yes (Even, Odd) No parity	Yes (Even, Odd) No parity
Stop bit	1	1 or 2	1 or 2

	If this option is added, Set value memory number external selection (SM option) cannot be added.
Set value memory external selection [SM]	SV1, SV2, SV3 or SV4 can be selected by the external contact. The MEMO display indicates the selected memory number. Contact input terminals DI2 can be used for "Set value memory external selection" or for "OUT/OFF external selection" during the "Contact input function selection" of the Setup mode. If Auto/Manual control function is selected during "OUT/OFF key function selection" in the Setup mode, externally Auto/Manual control can be switched. Circuit current when closed: Approx. 6mA If this option is added, Serial communication (C5 option) cannot be added.
Terminal cover [TC]	Electric shock protection terminal cover Be sure to use this terminal cover by adding this option if operator may touch the back of the controller while running the controller.

■Terminal arrangement

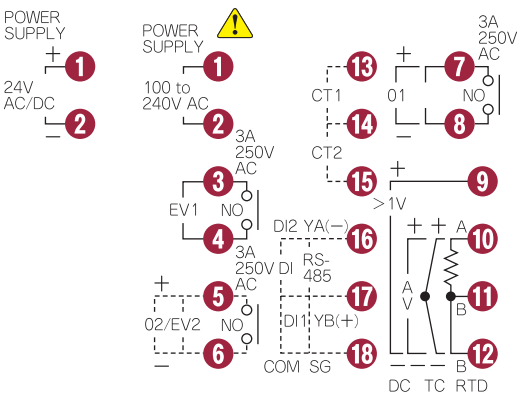

POWER SUPPLY	
EV1	Alarm 1 output
O2/EV2	Cooling output (Option: D□), Alarm 2 output (Option: A2) or Heater burnout alarm output (Option: W, W3)
O1	Control output or Heating output (Option: D□)
DC	DC current or DC voltage input (For DC voltage input, + side terminal number differs depending on the voltage input.)
TC	Thermocouple input
RTD	RTD input
CT1	CT input 1 (Option: W, W3)
CT2	CT input 2 (Option: W3)
DI	Contact input (Option: SM)
RS-485	Serial communication RS-485 (Option: C5)

- **This controller does not have built-in power switch, circuit breaker or fuse. It is necessary to install them near the controller.**
- **For a 24V AC/DC power source, do not confuse polarity when using direct current (DC).**

■Solderless terminal

Use a solderless terminal with an insulation sleeve in which the M3 screw fits. Tightening torque is 0.6N·m to 1.0N·m.

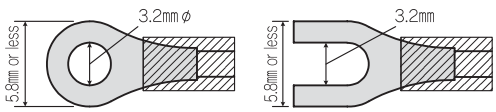

■External dimensions (Unit: mm)

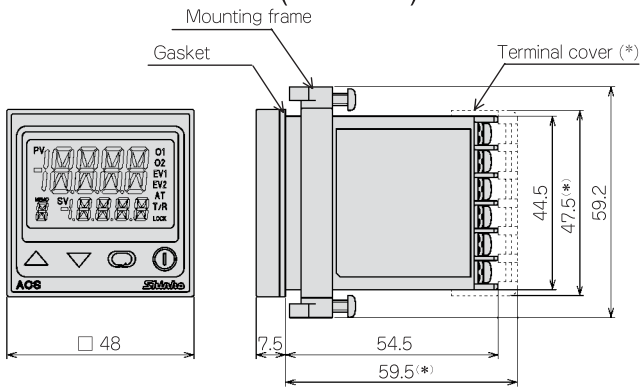

(*) When TC option is added

■Panel cutout (Unit: mm)

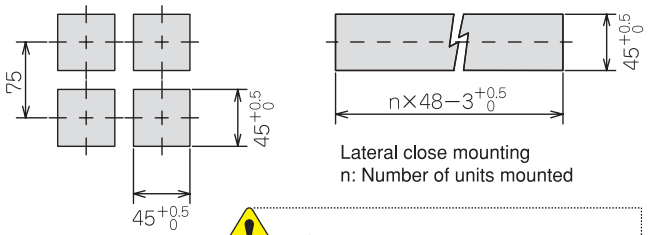

Lateral close mounting
n: Number of units mounted

Caution:

If lateral close mounting is used for the controller, IP66 specification (Dust-proof/Drip-proof) may be compromised, and all warranties will be invalidated.

■Wiring example

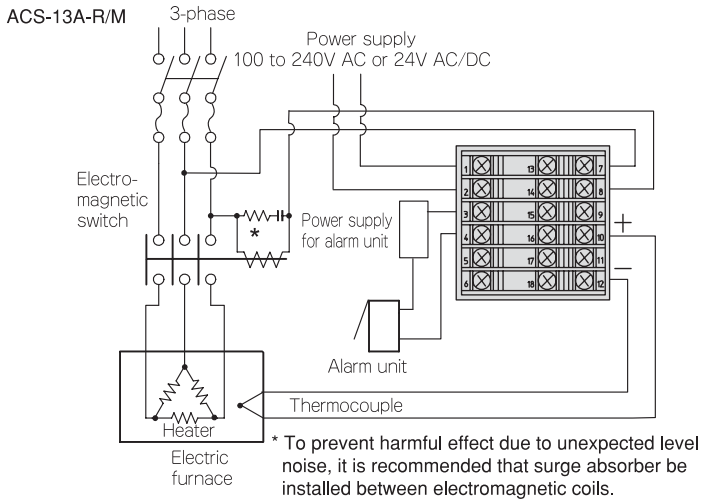

* To prevent harmful effect due to unexpected level noise, it is recommended that surge absorber be installed between electromagnetic coils.

■CT external dimensions (Unit: mm)

CTL-6S (For 20A)

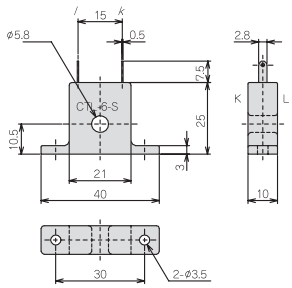

CTL-12-S36-10L1 (For 50A)

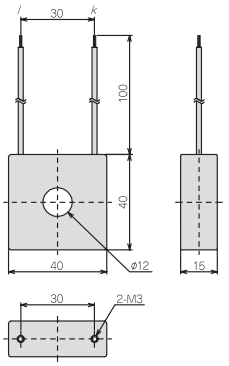

■Console software SWS-ACS01M included

Using the Console software with an USB communication cable CMA (sold separately), parameters setting, logging and monitoring of the controller can be performed by connecting to the USB port of the PC.

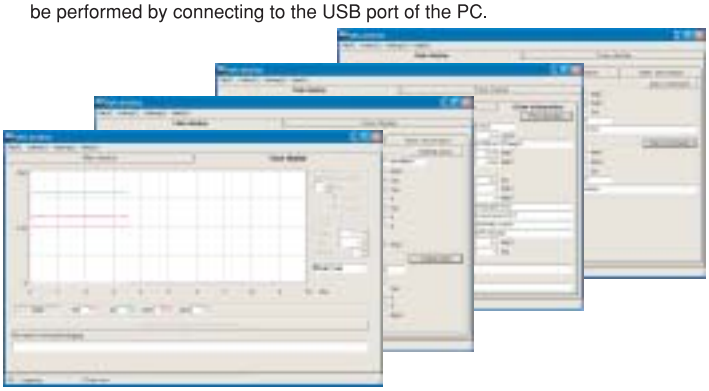

●USB communication cable CMA (Unit: mm)

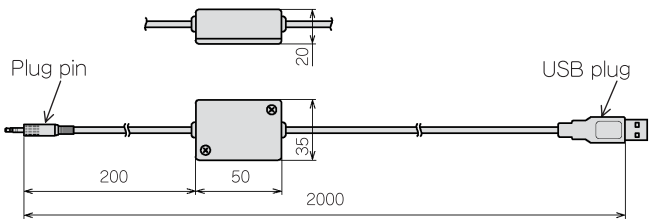

SAFETY PRECAUTIONS

- To ensure safe and correct use, thoroughly read and understand the manual before using this instrument.
- This instrument is intended to be used for industrial machinery, machine tools and measuring equipment. Verify correct usage after consulting purpose of use with our agency or main office.
  (Never use this instrument for medical purposes with which human lives are involved.)
- External protection devices such as protection equipment against excessive temperature rise, etc. must be installed, as malfunction of this product could result in serious damage to the system or injury to personnel. Also proper periodic maintenance is required.
- This instrument must be used under the conditions and environment described in the manual. Shinko Technos Co., Ltd. does not accept liability for any injury, loss of life or damage occurring due to the instrument being used under conditions not otherwise stated in the manual.

Caution with respect to Export Trade Control Ordinance

To avoid this instrument from being used as a component in, or as being utilized in the manufacture of weapons of mass destruction (i.e. military applications, military equipment, etc.), please investigate the end users and the final use of this instrument.
In the case of resale, ensure that this instrument is not illegally exported.

ISO 9001 KEMA CERT. No. 60033 © DUTCH COUNCIL FOR ACCREDITATION

· This catalog is as of September 2005 and its contents are subject to change without notice.
· If you have any inquiries, please consult us or our agency.

INSTRUCTION MANUAL

Micro-computer based Digital Indicating Controller **ACS-13A**

No.ACS12E2 2005.08

Preface

Thank you for purchasing of our microcomputer based temperature indicating controller ACS-13A.
This manual contains instructions for the mounting, functions, operations and notes when operating the ACS-13A.
To prevent accidents arising from the misuse of this controller, please ensure the operator receives this manual.

Characters used in this manual:

Number,℃/℉	-1	0	1	2	3	4	5	6	7	8	9	℃	℉
Indication	-1	0	1	2	3	4	5	6	7	8	9	C	F
Alphabet	A	B	C	D	E	F	G	H	I	J	K	L	M
Indication	A	b	c	d	E	F	G	H	I	J	K	L	M
Alphabet	N	O	P	Q	R	S	T	U	V	W	X	Y	Z
Indication	N	o	P	Q	R	S	T	U	V	W	X	Y	Z

Notes

- This instrument should be used in accordance with the specifications described in the manual.
  If it is not used according to the specifications, it may malfunction or cause fire.
- Be sure to follow the warnings, cautions and notices. If they are not observed, serious injury or malfunction may occur.
- The contents of this instruction manual are subject to change without notice.
- Care has been taken to assure that the contents of this instruction manual are correct, but if there are any doubts, mistakes or questions, please inform our sales department.
- This instrument is designed to be installed within a control panel. If it is not, measures must be taken to ensure that the operator cannot touch power terminals or other high voltage sections.
- Any unauthorized transfer or copying of this document, in part or in whole, is prohibited.
- Shinko Technos CO., LTD. is not liable for any damages or secondary damages incurred as a result of using this product, including any indirect damages.

Safety precautions **(Be sure to read these precautions before using our products.)**

The safety precautions are classified into categories: “Warning” and “Caution”. Depending on circumstances, procedures indicated by ⚠ Caution may be linked to serious results, so be sure to follow the directions for usage.

⚠ Warning Procedures which may lead to dangerous conditions and cause death or serious injury, if not carried out properly.

⚠ Caution Procedures which may lead to dangerous conditions and cause superficial to medium injury or physical damage or may degrade or damage the product, if not carried out properly.

⚠ Warning

- To prevent an electric shock or fire, only Shinko or qualified service personnel may handle the inner assembly.
- To prevent an electric shock, fire or damage to the instrument, parts replacement may only be undertaken by Shinko or qualified service personnel.

⚠ Safety precautions

- To ensure safe and correct use, thoroughly read and understand this manual before using this instrument.
- This instrument is intended to be used for industrial machinery, machine tools and measuring equipment. Verify correct usage after consulting the purpose of use with our agency or main office. (Never use this instrument for medical purposes with which human lives are involved.)
- External protection devices such as protection equipment against excessive temperature rise, etc. must be installed, as malfunction of this product could result in serious damage to the system or injury to personnel. Also proper periodic maintenance is required.
- This instrument must be used under the conditions and environment described in this manual. Shinko Technos Co., Ltd. does not accept liability for any injury, loss of life or damage occurring due to the instrument being used under conditions not otherwise stated in this manual.

Caution with respect to Export Trade Control Ordinance

To avoid this instrument from being used as a component in, or as being utilized in the manufacture of weapons of mass destruction (i.e. military applications, military equipment, etc.), please investigate the end users and the final use of this instrument. In the case of resale, ensure that this instrument is not illegally exported.

1. Installation precautions

⚠ Caution

This instrument is intended to be used under the following environmental conditions (IEC61010-1): Overvoltage category Ⅱ, Pollution degree 2
Ensure the mounting location corresponds to the following conditions:

- **A minimum of dust, and an absence of corrosive gases**
- **No flammable, explosive gases**
- **No mechanical vibrations or shocks**
- **No exposure to direct sunlight, an ambient temperature of 0 to 50℃ (32 to 122℉) that does not change suddenly**
- **An ambient non-condensing humidity of 35 to 85%RH**
- **No large capacity electromagnetic switches or cables through which large current is flowing.**
- **No water, oil or chemicals or where the vapors of these substances can come into direct contact with the unit**

Note • Do not install this instrument near flammable material even though the case of this instrument is made of flame resistant resin.
Avoid setting this instrument directly on flammable material.

2. Wiring precautions

⚠ Caution

- **Do not leave bits of wire in the instrument, because they could cause fire or malfunction.**
- **Use the solderless terminal with an insulation sleeve in which the M3 screw fits when wiring the ACS-13A.**
- **The terminal block of this instrument is designed to be wired from the left side. The lead wire must be inserted from the left side of the terminal, and fastened with the terminal screw.**
- **Tighten the terminal screw to within the specified torque. If excessive force is applied to the screw when tightening, the terminal screw or case may be damaged.**
- **When using a terminal cover, pass terminal wires numbered 7 to 12 into the holes of the terminal cover.**
- **This instrument does not have a built-in power switch, circuit breaker or fuse.**
  It is necessary to install them near the controller.
  (Recommended fuse: Time-lag fuse, rated voltage 250V AC, rated current 2A)
- **For a 24V AC/DC power source, do not confuse polarity when using direct current (DC).**
- **Do not apply a commercial power source to the sensor which is connected to the input terminal nor allow the power source to come into contact with the sensor.**
- **Use a thermocouple and compensating lead wire according to the sensor input specifications of this controller.**
- **Use the 3-wire RTD according to the sensor input specifications of this controller.**
- **(+) side input terminal number of 0 to 5V DC, 1 to 5V DC, 0 to 10V DC differs from that of 0 to 1V DC.**
  (+) side input terminal number of 0 to 5V DC, 1 to 5V DC, 0 to 10V DC: 9
  (+) side input terminal number of 0 to 1V DC: 10
- **When using a relay contact output type, use a relay according to the capacity of the load to protect the built-in relay contact.**
- **When wiring, keep input wires (thermocouple, RTD, etc.) away from AC sources or load wires to avoid external interference.**

3. Operation and maintenance precautions

⚠ Caution

- **It is recommended that PID auto-tuning be performed on the trial run.**
- **Do not touch live terminals. This may cause electric shock or problems in operation.**
- **Turn the power supplied to the instrunment OFF when retightening the terminal or cleaning.**
  Working or touching the terminal with the power switched ON may result in severe injury or death due to Electric Shock.
- **Use a soft, dry cloth when cleaning the instrument.**
  (Alcohol based substances may tarnish or deface the unit.)
- **As the display section is vulnerable, do not strike or scratch it with a hard object or press hard on it.**

1. Model

1.1 Model

ACS – 1 3 □–□/□ □ □□□						Series name: ACS-13A (W48 x H48 x D62mm)
Control action	3					PID
A1		A				Alarm type can be selected by keypad. *1
Control output, Heating output: O1 (OUT1)		R				Relay contact: 1a
		S				Non-contact voltage (for SSR drive): 12V DC±15%
		A				DC current: 4 to 20mA DC
Input			M			Multi-range *2
Supply voltage						100 to 240V AC (standard)
				1		24V AC/DC *3
Option (Multiple options are selectable. See pages 22, 23 for option combinations.)					A2	Alarm 2 output (A2) *1
					W(20A)	Heater burnout alarm: CT rated current: 20A (Single phase)
					W(50A)	Heater burnout alarm: CT rated current: 50A (Single phase)
					W3(20A)	Heater burnout alarm: CT rated current: 20A (3-phase)
					W3(50A)	Heater burnout alarm: CT rated current: 50A (3-phase)
					DR, DS	Heating/Cooling control Cooling output: O2 (OUT2) — Relay contact: 1a / Non-contact voltage: 12V DC±15%
					C5	Serial communication (RS-485)
					SM	Set value memory external selection

*1: Alarm types (9 types and No alarm action) and Energized/Deenergized can be selected by keypad.
*2: Thermocouple, RTD, DC current and DC voltage can be selected by keypad.
For DC current input, connect 50Ω shunt resistor (sold separately) externally.
*3: Supply voltage 100 to 240V AC is standard. When ordering 24V AC/DC, enter "1" after the input code.

1.2 How to read the model label

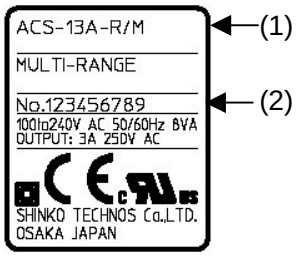

The model labels are attached to the left side of the case and inner assembly.
For Heater burnout alarm output, CT rated current is written in the bracket.
(1): Model name, Power supply (For 24V AC/DC, "1" is entered), Options
(2): Serial number (Only on inner assembly)

(e.g.) Relay contact output/Multi-range input

2. Name and functions of the sections

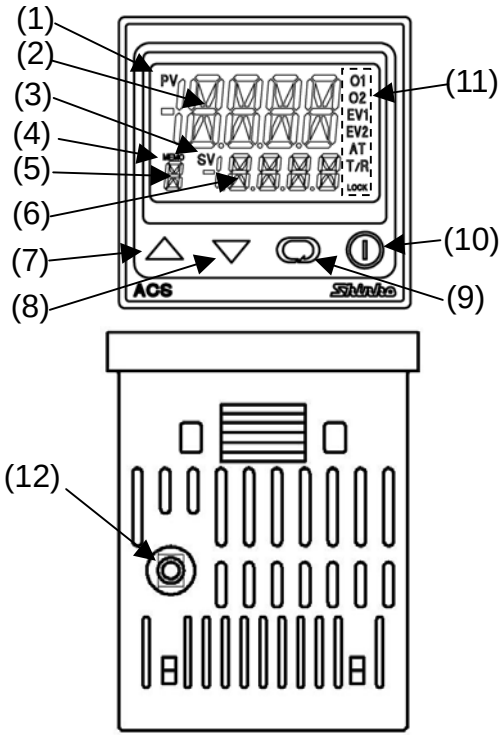

(1) **PV indicator** : Lights when PV is indicated in the PV/SV display mode.
(2) **PV display** : Indicates the PV (process variable).
(3) **SV indicator** : Lights when SV is indicated in the PV/SV display mode.
(4) **MEMO indicator** : Lights when Set value memory external selection (SM option) is added.
(5) **MEMO display** : Indicates the set value memory number.
(6) **SV display** : Indicates the SV (set value).
(7) △ **Increase key** : Increases the numeric value.
(8) ▽ **Decrease key**: Decreases the numeric value.
(9) **Mode key** : Selects the setting mode, or registers the set value. To register the set (selected) value, press this key.
(10) **OUT/OFF key**: Switches control output ON/OFF or Auto/Manual control. To release the control output ON/OFF, press this key for approx. 1sec.
(11) **Action indicators**
O1 (OUT1): Lights when control output is ON or when Heating output (D□ option) is ON. For DC current output type, flashes corresponding to the MV in 0.25 second cycles.
O2 (OUT2): Lights when cooling output (D□ option) is ON.
EV1: Lights when Alarm 1 output is ON.
EV2: Lights when Alarm 2 output (A2 option) is ON or when Heater burnout alarm (W, W3 option) is ON.
AT : Flashes while AT (auto-tuning) or auto-reset is performing.
T/R : Lights during Serial communication (C5 option) (TX output).
LOCK: Lights when Lock 1, Lock 2 or Lock 3 is selected.

(12) Console connector: By connecting to the USB communication cable (CMA, sold separately), the following operations can be conducted from the external computer using the Console software SWS-ACS01M. (1) Reading and setting of SV, PID and various set values, (2) Reading of PV and action status, (3) Function change

3. Mounting to the control panel

3.1 External dimensions (Unit: mm)

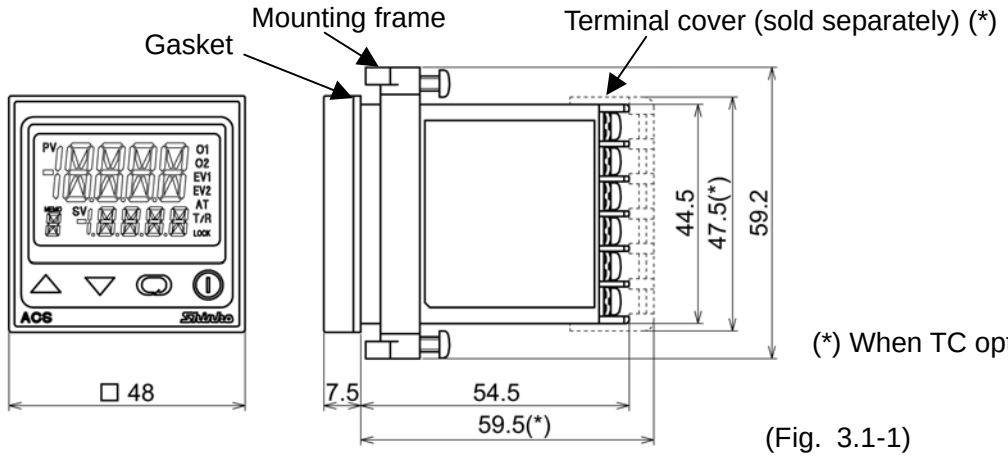

(*) When TC option is added

(Fig. 3.1-1)

3.2 Panel cutout (Unit: mm)

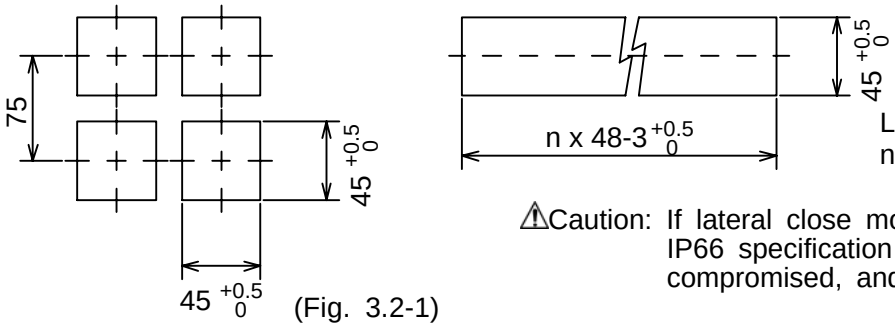

Lateral close mounting
n: Number of units mounted

⚠Caution: If lateral close mounting is used for the controller, IP66 specification (Dust-proof/Drip-proof) may be compromised, and all warranties will be invalidated.

(Fig. 3.2-1)

3.3 CT (Current transformer) external dimensions (Unit: mm)

CTL-6S (for 20A) CTL-12-S36-10L1 (for 50A)

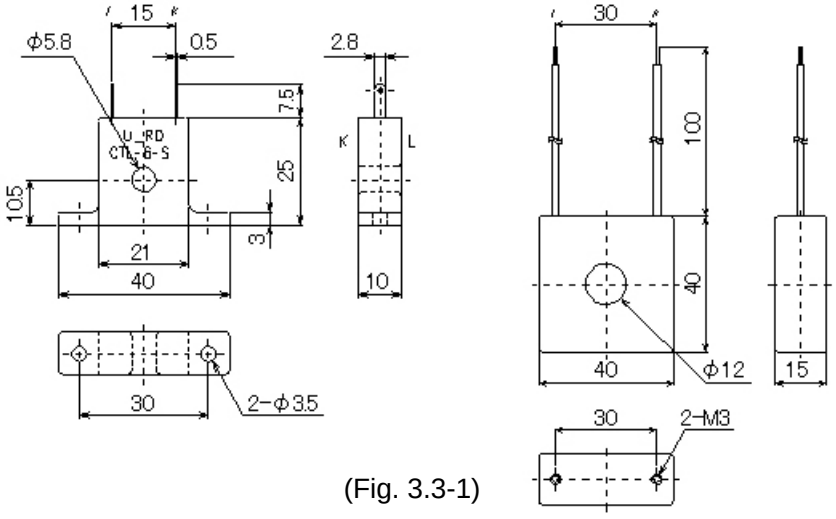

(Fig. 3.3-1)

3.4 Mounting and removal to/from the control panel

⚠ Caution

As the mounting frame is made of resin, do not use excessive force while tightening screws, or the mounting frame could be damaged. Tighten screws with one rotation upon the screw tips touching the panel. The torque is approximately 0.05 to 0.06 N•m.

How to mount the ACS-13A

Mount the controller vertically to the flat, rigid panel to ensure it adheres to the Dust-proof/Drip-proof specification (IP66).
Mountable panel thickness: Within 1 to 5mm

(1) Insert the controller from the front side of the panel. (Fig.3.4-1)
(2) Insert the unit until mounting frame comes into contact with the panel, and fasten with the screw.
Tighten screws with one rotation upon the screw tips touching the panel. (Fig.3.4-2)
The torque is approximately 0.05 to 0.06N•m.

How to remove the mounting frame (Fig. 3.4-3)

(1) Turn the power to the unit OFF, and disconnect all wires before removing the mounting frame.
(2) Insert a flat blade screwdriver between the screw frame and unit ①.
(3) Slowly push the frame upward using the screwdriver ②, while pushing the unit toward the panel ③.
(4) Repeat step (2) and slowly push the frame downward using the screwdriver for the other side.
The frame can be removed little by little by repeating these steps.

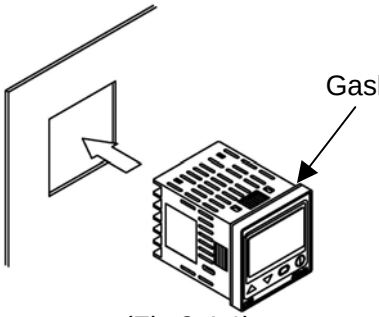

(Fig.3.4-1)

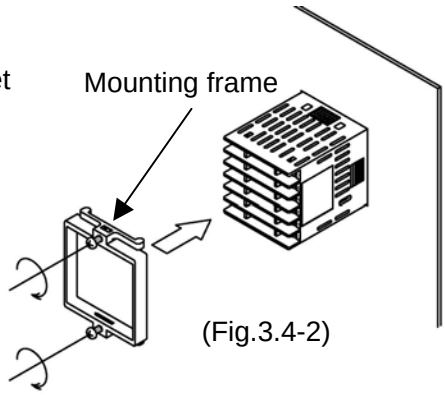

(Fig.3.4-2)

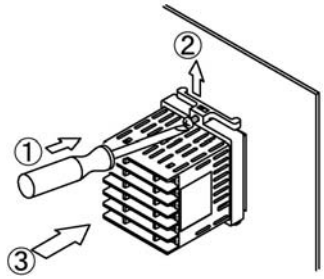

(Fig.3.4-3)

4. Wiring

⚠ Warning

Turn the power supply to the instrument off before wiring or checking.
Working or touching the terminal with the power switched on may result in severe injury or death due to Electric Shock.

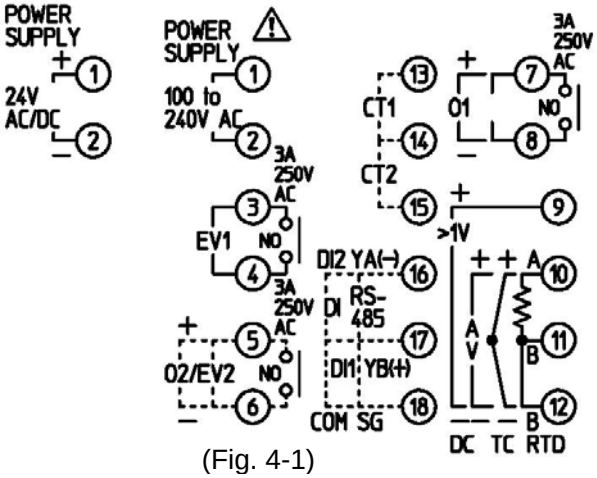

(Fig. 4-1)

- EV1 : Alarm 1 output
- O2/EV2: Cooling output (D□ option), Alarm 2 output (A2 option) or Heater burnout alarm output (W, W3 option)
- O1 : Control output or Heating output (D□ option)
- DC : DC current, DC voltage input **(For DC voltage input, + side terminal number differs depending on the voltage input.)**
- TC : Thermocouple input
- RTD : Resistance temperature detector input
- CT1 : CT input 1 (W, W3 option)
- CT2 : CT input 2 (W3 option)
- DI : Contact input (SM option)
- RS-485: Serial communication RS-485 (C5 option)

● **Lead wire solderless terminal**

Use a solderless terminal with an insulation sleeve in which an M3 screw fits as shown below. The torque is approximately 0.6N•m to 1.0N•m.

Solderless terminal	Manufacturer	Model name	Tightening torque
Y type	Nichifu Terminal Industries CO.,LTD.	1.25Y-3	0.6N•m Max. 1.0N•m
	Japan Solderless Terminal MFG CO.,LTD.	VD1.25-B3A	
Round type	Nichifu Terminal Industries CO.,LTD.	1.25-3	
	Japan Solderless Terminal MFG CO.,LTD.	V1.25-3	

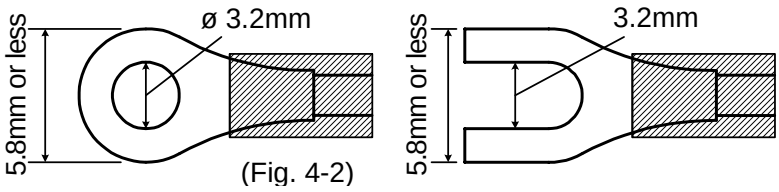

(Fig. 4-2)

● **When using a terminal cover**

When using a terminal cover (TC option), pass terminal wires numbered 7 to 12 into the holes of the terminal cover.

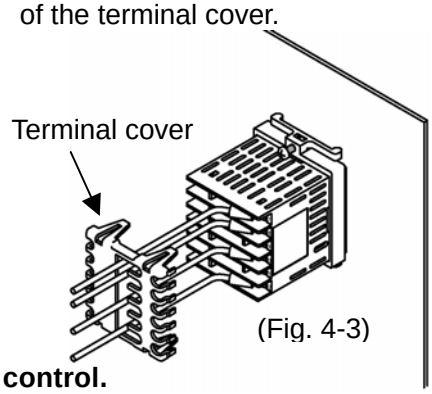

(Fig. 4-3)

● **Heater burnout alarm (W, W3 option)**

This alarm is not usable for detecting heater current under phase control.

Use the CT (current transformer) provided, and pass one lead wire of the heater circuit into the hole of the CT. (Fig. 4-4). When wiring, keep the CT wire away from AC sources or load wires to avoid the external interference.

In the case of 3-phase (W3 option), pass any 2 lead wires of R, S, T into the CT, and connect them with CT1 (13, 14) and CT2 terminals (14, 15). (Fig.4-5)

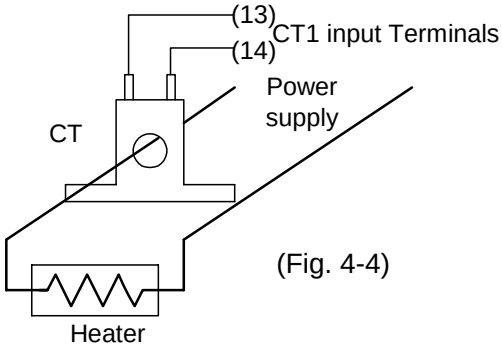

(Fig. 4-4)

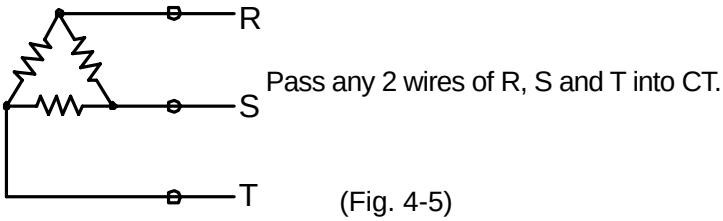

(Fig. 4-5)

5. Operation flowchart

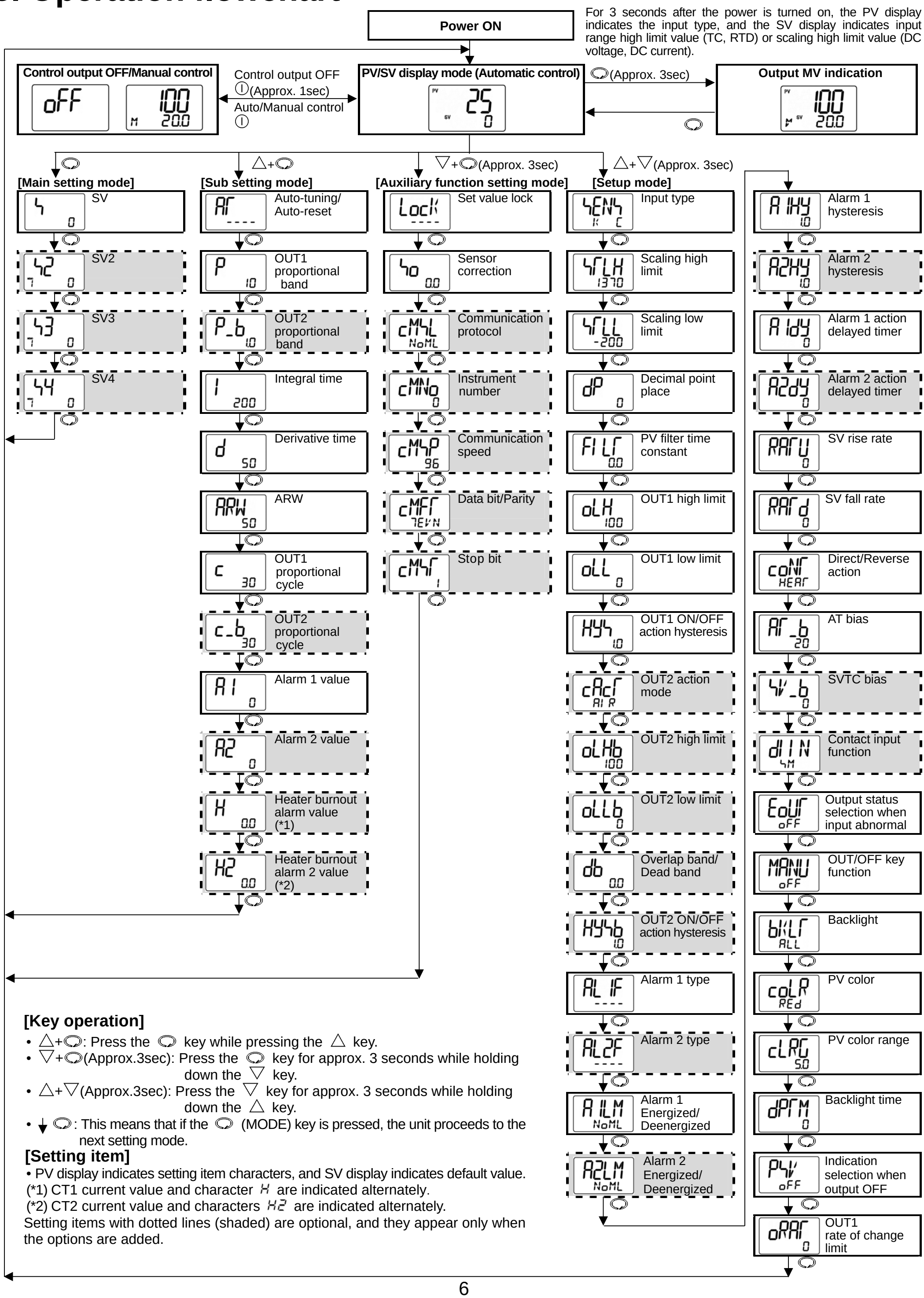

[Key operation]

- △+◯: Press the ◯ key while pressing the △ key.
- ▽+◯(Approx.3sec): Press the ◯ key for approx. 3 seconds while holding down the ▽ key.
- △+▽(Approx.3sec): Press the ▽ key for approx. 3 seconds while holding down the △ key.
- ↓◯: This means that if the ◯ (MODE) key is pressed, the unit proceeds to the next setting mode.

[Setting item]

- PV display indicates setting item characters, and SV display indicates default value.

(*1) CT1 current value and character H are indicated alternately.
(*2) CT2 current value and characters H2 are indicated alternately.
Setting items with dotted lines (shaded) are optional, and they appear only when the options are added.

6. Setup

Setup should occur before using this controller, to set the Input type, Alarm action, Control action, etc. according to the users' conditions.

Default values: Input (K, -200 to1370℃), Alarm 1 (No alarm action), Reverse (Heating) action

If the users' specification is the same as the default value of the ACS-13A, it is not necessary to set up the controller. Proceed to Chapter "7. Settings".

Turn the power supply to the ACS-13A ON.

After the power is turned on, the PV display indicates the input type, and the SV display indicates the input range high limit value (thermocouple, RTD input) or scaling high limit value (DC input) for approximately 3 seconds. (Table 6-1)

During this time, all outputs and the indicators are in OFF status.

Control will then start and the PV display indicates PV (process variable) and the SV display indicates SV (set value). While control output OFF function is working, the PV display indicates oFF□.

(Indication depends on the selection during "Output status selection when input abnormal".)

(Table 6-1)

Sensor input	℃		℉	
	PV display	SV display	PV display	SV display
K	K□□C	1370	K□□F	2500
	K□ .C	400.0	K□ .F	750.0
J	J□□C	1000	J□□F	1800
R	R□□C	1760	R□□F	3200
S	S□□C	1760	S□□F	3200
B	b□□C	1820	b□□F	3300
E	E□□C	□800	E□□F	1500
T	T□ .C	400.0	T□ .F	750.0
N	N□□C	1300	N□□F	2300
PL-Ⅱ	PL2C	1390	PL2F	2500
C (W/Re5-26)	C□□C	2315	C□□F	4200
Pt100	Pt .C	850.0	Pt .F	1500.0
	Pt□C	□850	Pt□F	1500
JPt100	JPt.C	500.0	JPt.F	900.0
	JPtC	□500	JPtF	□900
4 to 20mA DC	420A	Scaling high limit value		
0 to 20mA DC	020A			
0 to 1V DC	0□ 1V			
0 to 5V DC	0□5V			
1 to 5V DC	1□5V			
0 to 10V DC	0 10V			

Basic operation of settings

To enter each setting mode, refer to respective setting modes.

To set or select each setting item, use the △ or ▽ key, then register the value with the ◎ key.

6.1 Setup mode

To enter the Setup mode, press the ▽ key for approx. 3 seconds while holding down the △ key in the PV/SV display mode.

Character	Name, Function, Setting range	Default value
SENS K C	**Input type selection** • The input type can be selected from thermocouple (10 types), RTD (2 types), DC current (2 types) and DC voltage (4 types), and the unit ℃/℉ can be selected as well. • When changing the input from DC voltage to other inputs, remove the sensor connected to this controller first, then change for the input. If the input is changed with the sensor connected, the input circuit may break. • **(+) side input terminal number of 0 to 5V DC, 1 to 5V DC, 0 to 10V DC differs from that of 0 to 1V DC.** **(+) side input terminal number of 0 to 5V DC, 1 to 5V DC, 0 to 10V DC: 9** **(+) side input terminal number of 0 to 1V DC: 10**	K (-200 to 1370℃)

K□□C	K	-200 to	1370 ℃	K□□F	K	-320 to	2500 ℉
K□ .C	K	-200.0 to	400.0 ℃	K□ .F	K	-320.0 to	750.0 ℉
J□□C	J	-200 to	1000 ℃	J□□F	J	-320 to	1800 ℉
R□□C	R	0 to	1760 ℃	R□□F	R	0 to	3200 ℉
S□□C	S	0 to	1760 ℃	S□□F	S	0 to	3200 ℉
b□□C	B	0 to	1820 ℃	b□□F	B	0 to	3300 ℉

	E□□C	E	-200	to	800	℃	E□□F	E	-320	to	1500	℉
	T□ .C	T	-200.0	to	400.0	℃	T□ .F	T	-320.0	to	750.0	℉
	N□□C	N	-200	to	1300	℃	N□□F	N	-320	to	2300	℉
	PL2C	PL-Ⅱ	0	to	1390	℃	PL2F	PL-Ⅱ	0	to	2500	℉
	c□□C	C(W/Re5-26)	0	to	2315	℃	c□□F	C(W/Re5-26)	0	to	4200	℉
	Pt .C	Pt100	-200.0	to	850.0	℃	Pt .F	Pt100	-320.0	to	1500.0	℉
	JPt.C	JPt100	-200.0	to	500.0	℃	JPt.F	JPt100	-320.0	to	900.0	℉
	Pt□C	Pt100	-200	to	850	℃	Pt□F	Pt100	-320	to	1500	℉
	JPtC	JPt100	-200	to	500	℃	JPtF	JPt100	-320	to	900	℉
	420A	4 to 20mA DC	-2000	to	10000							
	020A	0 to 20mA DC	-2000	to	10000							
	0□1V	0 to 1V DC	-2000	to	10000							
	0□5V	0 to 5V DC	-2000	to	10000							
	1□5V	1 to 5V DC	-2000	to	10000							
	0 10V	0 to 10V DC	-2000	to	10000							

sclH 1370	**Scaling high limit setting** • Sets scaling high limit value. • Setting range: Scaling low limit value to input range high limit value DC voltage, current input: -2000 to 10000 (The placement of the decimal point follows the selection.)	1370℃
sclL -200	**Scaling low limit setting** • Sets scaling low limit value. • Setting range: Input range low limit value to scaling high limit value DC voltage, current input: -2000 to 10000 (The placement of the decimal point follows the selection.)	-200℃
dP 0	**Decimal point place selection** • Selects decimal point place. Available only for DC inputs • □□□0: No decimal point □□0.0: 1 digit after decimal point □0.00: 2 digits after decimal point 0.000: 3 digits after decimal point	No decimal point
FILr 0.0	**PV filter time constant setting** • Sets PV filter time constant. If the value is set too large, it affects control result due to the delay of response. • Setting range: 0.0 to 10.0 seconds	0.0 seconds
oLH 100	**OUT1 high limit setting** • Sets the high limit value of OUT1. Not available if OUT1 is ON/OFF action • Setting range: OUT1 low limit value to 100% (DC current output type: OUT1 low limit value to 105%)	100%
oLL 0	**OUT1 low limit setting** • Sets the low limit value of OUT1. Not available if OUT1 is ON/OFF action. • Setting range: 0% to OUT1 high limit value (DC current output type: -5% to OUT1 high limit value)	0%
HYS 1.0	**OUT1 ON/OFF action hysteresis setting** • Sets ON/OFF action hysteresis for OUT1. Available only when OUT1 is ON/OFF action • Setting range: 0.1 to 100.0℃ (℉), DC voltage, current input: 1 to 1000 (The placement of the decimal point follows the selection.)	1.0℃
cAcr AIR	**OUT2 action mode selection** • Selects OUT2 action from air, oil and water cooling. Not available if the D□ option is not added or if OUT2 is ON/OFF action • AIR□ Air cooling (linear characteristic) oIL□ Oil cooling (1.5th power of the linear characteristic) WAr□ Water cooling (2nd power of the linear characteristic) 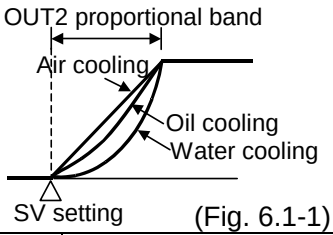 (Fig. 6.1-1)	Air cooling
oLHb 100	**OUT2 high limit setting** • Sets OUT2 high limit value. Not available if the D□ option is not added or if OUT2 is ON/OFF action • Setting range: OUT2 low limit value to 100%	100%
oLLb 0	**OUT2 low limit setting** • Sets OUT2 low limit value. Not available if the D□ option is not added or if OUT2 is ON/OFF action • Setting range: 0% to OUT2 high limit value	0%

db 0.0	**Overlap band/Dead band setting** • Sets the overlap band or dead band for OUT1 and OUT2. + Set value: Dead band, –Set value: Overlap band Available only when the D□ option is added • Setting range: -100.0 to 100.0℃(℉), DC voltage, current input: -1000 to 1000 (The placement of the decimal point follows the selection.)	0.0℃
HYSb 1.0	**OUT2 ON/OFF action hysteresis setting** • Sets ON/OFF action hysteresis for OUT2. Available when the D□ option is added, and when OUT2 is ON/OFF control action. • Setting range: 0.1 to 100.0℃ (℉), DC voltage, current input: 1 to 1000 (The placement of the decimal point follows the selection.)	1.0℃
AL1F ----	**Alarm 1 type selection** • Selects an Alarm 1 type. (Refer to “11.4 Alarm action” on p.18.) ----: No alarm action H□□□: High limit alarm L□□□: Low limit alarm HL□□: High/Low limits alarm Wid□: High/Low limit range alarm A1□□: Process high alarm RA1□: Process low alarm H□□W: High limit alarm with standby L□□W: Low limit alarm with standby HL□W: High/Low limits alarm with standby	No alarm action
AL2F ----	**Alarm 2 (A2) type selection** • Selects an Alarm 2 type. (Refer to “11.4 Alarm action” on p.18.) Available only when Alarm 2 (A2) option is added • Selection items are the same as those of Alarm 1.	No alarm action
A1LM NoML	**Alarm 1 Energized/Deenergized selection** • Selects Energized/Deenergized status for Alarm 1. (See p.11.) Not available if No alarm action is selected during Alarm 1 type selection •: NoML: Energized REV1: Deenergized	Energized
A2LM NoML	**Alarm 2 Energized/Deenergized selection** • Selects Energized/Deenergized status for Alarm 2. (See p.11.) Not available if Alarm 2 (A2) option is not added or if No alarm action is selected during Alarm 2 type selection • Selection items are the same as those of Alarm 1 Energized/Deenergized selection.	Energized
A1HY 1.0	**Alarm 1 hysteresis setting** • Sets hysteresis for Alarm 1. Not available if No alarm action is selected during Alarm 1 type selection • Setting range: 0.1 to 100.0℃(℉), DC voltage, current input: 1 to 1000 (The placement of the decimal point follows the selection.)	1.0℃
A2HY 1.0	**Alarm 2 hysteresis setting** • Sets hysteresis for Alarm 2. Not available if Alarm 2 (A2) option is not added or if No alarm action is selected during Alarm 2 type selection • Setting range: 0.1 to 100.0℃(℉), DC voltage, current input: 1 to 1000 (The placement of the decimal point follows the selection.)	1.0℃
A1dY 0	**Alarm 1 action delayed timer setting** • Sets action delayed timer for Alarm 1. When setting time has elapsed after the input enters the alarm output range, the alarm is activated. Not available if No alarm action is selected during Alarm 1 type selection • Setting range: 0 to 10000 seconds	0 seconds
A2dY 0	**Alarm 2 action delayed timer setting** • Sets action delayed timer for Alarm 2. When setting time has elapsed after the input enters the alarm output range, the alarm is activated. Not available if Alarm 2 (A2) option is not added or if No alarm action is selected during Alarm 2 type selection • Setting range: 0 to 10000 seconds	0 seconds
RATU 0	**SV rise rate setting** • Sets SV rise rate (rising value for 1 minute). Setting to 0 disables the function. • Setting range: 0 to10000℃/min. (℉/min.) Thermocouple, RTD input with a decimal point: 0.0 to1000.0℃/min. (℉/min.) DC voltage, current input: 0 to 10000/min.(The placement of the decimal point follows the selection.)	0℃/min.
RATd 0	**SV fall rate setting** • Sets SV fall rate (falling value for 1 minute). Setting to 0 disables the function. • Setting range: 0 to10000℃/min. (℉/min.) Thermocouple, RTD input with a decimal point: 0.0 to1000.0℃/min. (℉/min.) DC voltage, current input: 0 to 10000/min.(The placement of the decimal point follows the selection.)	0℃/min.
conT HEAT	**Direct/Reverse action selection** • Selects either Reverse (Heating) or Direct (Cooling) action. • HEAT: Reverse (Heating) cooL: Direct (Cooling)	Reverse (Heating) action

AT_b 20	**AT bias setting**	20℃
	• Sets bias value during PID auto-tuning. (Refer to Chapter “10. Auto-tuning” on p.16.) Not available for DC input • Setting range: 0 to 50℃ (0 to 100℉) (Thermocouple, RTD input with a decimal point: 0.0 to 50.0℃(0.0 to100.0℉)	
SV_b 0	**SVTC bias setting**	0℃
	• SV adds SVTC bias value to the value received by the SVTC command. Available only when the C5 option is added • Setting range: Converted value of ±20% of the input span DC input: ±20% of the scaling span (The placement of the decimal point follows the selection.)	
diIN SM	**Contact input function selection**	Set value memory external selection
	• Contact input terminals DI2 can be used for a “Set value memory external selection” or for an “OUT/OFF external selection”. See “Contact input function selection” on p.11. If Auto/Manual control function is selected during OUT/OFF key function selection, externally Auto/Manual control can be switched. Available only when the SM option is added. • SM: Set value memory external selection oUT: OUT/OFF external selection 1 (SV and SV2 can be switched) oUT2: OUT/OFF external selection 2	
EoUT oFF	**Output status selection when input abnormal**	Output OFF
	• Selects whether OUT1 (OUT2) is turned OFF or not when DC input is overscale or underscale. Available only for DC current output type with DC input • oFF: Outputs OFF(4mA) or OUT1(OUT2) low limit oN: Outputs a value between OFF(4mA) and ON(20mA) or between OUT1(OUT2) low limit value and OUT1(OUT2) high limit value depending on a deviation.	
MANU oFF	**OUT/OFF key function selection**	OUT/OFF function
	• Selects whether OUT/OFF key is used for control output “OUT/OFF function” or for “Auto/Manual control function”. • oFF: OUT/OFF function, MANU: Auto/Manual control function	
bKLT ALL	**Backlight selection**	All are backlit
	• Selects the display to backlight. • ALL: All (displays and indicators) are backlit. PV: Only PV display is backlit. SV: Only SV display is backlit. Ac: Only Action indicators are backlit. PV SV: PV and SV displays are backlit. PV Ac: PV display and Action indicators are backlit. SV Ac: SV display and Action indicator are backlit.	
coLR REd	**PV color selection**	Red
	• Selects PV display color. See “PV display color selection” on p.11. • GRN: Green REd: Red oRG: Orange ALGR: When Alarm 1 or Alarm 2 is ON, PV color turns from green to red. ALoR: When Alarm 1 or Alarm 2 is ON, PV color turns from orange to red. PVGR: PV color changes continuously (Orange → Green → Red). APGR: PV color changes continuously (Orange → Green → Red), and at the same time Alarm 1 or Alarm 2 is ON (Red).	
cLRG 5.0	**PV color range setting**	5.0℃
	• When PVGR (PV color changes continuously) or APGR (PV color changes continuously + Alarm 1 or Alarm 2 is ON) is selected during PV color selection, the value of green PV color range can be set. See “PV display color selection” on p.11. • Setting range: 0.1 to 100.0℃(℉), DC voltage, current input: 1 to 1000 (The placement of the decimal point follows the selection.)	
dPTM 0	**Backlight time setting**	0 minutes
	• Sets time to backlight from no operation status until backlight is switched off. When set to 0, the backlight remains ON. Backlight relights by pressing any key while backlight is OFF. • Setting range: 0 to 99 minutes	
PSV oFF	**Indication selection when output OFF**	OFF indication
	• Selects the indication when control output is OFF. • oFF: OFF indication, AoFF: No indication, PV: PV indication • PVAL: PV indication+ Alarm output(Alarm 1, Alarm 2, Heater burnout alarm) active	
oRAT 0	**OUT1 rate of change limit**	0%/second
	• Sets changing value of OUT1 MV for 1 second. • Not available if OUT1 is ON/OFF action, or when set to 0. • 0 to 100%/second	

Alarm action Energized/Deenergized

When [Alarm Energized] is selected, the alarm output (between terminals 3-4, or 5-6) is conductive (ON) while the alarm output indicator is lit.
The alarm output is not conductive (OFF) while the alarm output indicator is not lit.
When [Alarm Deenergized] is selected, the alarm output (between terminals 3-4, or 5-6) is not conductive (OFF) while the alarm output indicator is lit.
The alarm output is conductive (ON) while the alarm output indicator is not lit.

High limit alarm (when Energized is set)

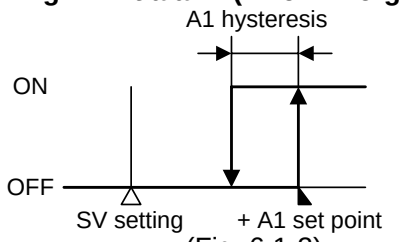

(Fig. 6.1-2)

High limit alarm (when Deenergized is set)

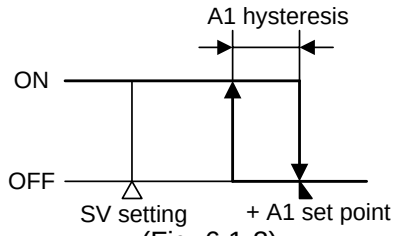

(Fig. 6.1-3)

A1: Alarm 1
For Alarm 2(A2), read "A2" for "A1".

[Contact input function selection] (Table 6.1-1)

Connecting terminal No.		Contact input function		
Between 17-18 (DI1-COM)	Between 16-18 (DI2-COM)	Set value memory external selection	OUT/OFF external selection 1 (SV, SV2 can be switched)	OUT/OFF external selection 2
Open	Open	SV	SV **[**SV(Automatic control)**]**	SV **[**SV(Automatic control)**]**
Closed	Open	SV2	SV2 **[**SV2(Automatic control)**]**	
Open	Closed	SV3	Control output OFF **[**Manual control**]**	Control output OFF **[**Manual control**]**
Closed	Closed	SV4		

[ ]: When Auto/Manual control is selected during OUT/OFF key function selection in the Setup mode.

[PV display color selection] (Table 6.1-2)

Setting	Function	PV color
GRN	Green	Constantly green
RED	Red	Constantly red
ORG	Orange	Constantly orange
ALGR	When Alarm 1 or Alarm 2 is ON: Green → Red	When alarm OFF: Green When Alarm 1 or Alarm 2 is ON, the PV color turns from green to red.
ALOR	When Alarm 1 or Alarm 2 is ON: Orange → Red	When alarm OFF: Orange When Alarm 1 or Alarm 2 is ON, the PV color turns from orange to red.
PVGR	PV color changes continuously (Orange → Green → Red)	PV color changes depending on the color range setting. • PV is lower than [SV-PV color range]: Orange • PV is within [SV±PV color range]: Green • PV is higher than [SV+PV color range]: Red 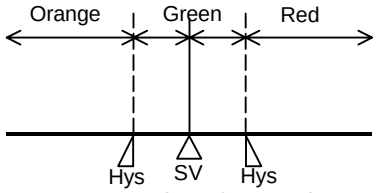 (Fig. 6.1-4) Hys: Set point of PV color range
APGR	PV color changes continuously (Orange → Green → Red), and at the same time Alarm 1 or Alarm 2 is ON (Red).	PV color changes depending on the color range setting. When Alarm 1 or Alarm 2 is on, PV display turns red. • PV is lower than [SV-PV color range]: Orange • PV is within [SV±PV color range]: Green • PV is higher than [SV+PV color range]: Red • Alarm 1 or Alarm 2 is ON: Red 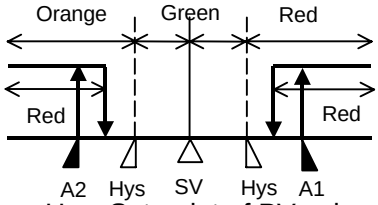 (Fig. 6.1-5) Hys: Set point of PV color range A1: Alarm 1 set point (High limit alarm) A2: Alarm 2 set point (Low limit alarm)

7. Settings

7.1 Main setting mode

To enter the Main setting mode, press the key in the PV/SV display mode.

Character	Name, Function, Setting range	Default value
S 0	**SV** • Sets SV. • Setting range: Scaling low limit to Scaling high limit	0℃
S2 0	**SV2** • Sets SV2. Not available if the SM option is not applied, if C5 option is applied or if “OUT/OFF external selection 2” is selected during Contact input function selection. • Setting range: Scaling low limit to Scaling high limit	0℃
S3 0	**SV3** • Sets SV3. Not available if the SM option is not applied, if C5 option is applied or if “OUT/OFF external selection 1 or 2” is selected during Contact input function selection. • Setting range: Scaling low limit to Scaling high limit	0℃
S4 0	**SV4** • Sets SV4. Not available if the SM option is not applied, if C5 option is applied or if “OUT/OFF external selection 1 or 2” is selected during Contact input function selection. • Setting range: Scaling low limit to Scaling high limit	0℃

7.2 Sub setting mode

To enter the Sub setting mode, press the key while pressing the △ key in the PV/SV display mode.

Character	Name, Function, Setting range	Default value
AT ----	**Auto-tuning/Auto-reset setting** • Selects Auto-tuning Perform/Cancel (PID) or Auto-reset Perform/Cancel (P, PD action). Not available for ON/OFF and PI actions. • If the auto-tuning is cancelled during the process, P, I and D values revert to the previous values before auto-tuning was performed. • If the auto-tuning is not finished after 4 hours, it is cancelled automatically. • Auto-reset is cancelled in approximately 4 minutes. It cannot be released while performing this function. • ---- : Auto-tuning/Auto-reset Cancel AT□□/RSET : Auto-tuning/Auto-reset Perform	----
P 10	**OUT1 proportional band setting** • Sets the proportional band for OUT1. OUT1 becomes ON/OFF action when set to 0 or 0.0. • Setting range: 0 to 1000℃(2000℉), TC or RTD input with decimal point: 0.0 to 1000.0℃(℉) (DC voltage, current input: 0.0 to 100.0%)	10℃
P_b 1.0	**OUT2 proportional band setting** • Sets the proportional band for OUT2. OUT2 becomes ON/OFF action when set to 0.0. Not available if D□ option is not added, or if OUT1 is ON/OFF action. • Setting range: 0.0 to 10.0 times (multiplying factor to OUT1 proportional band)	1.0 times
I 200	**Integral time setting** • Sets integral time for OUT1. Setting the value to 0 disables the function. Not available if OUT1 is ON/OFF action. Auto-reset can be performed when PD is control action (I=0). • Setting range: 0 to 1000 seconds	200 seconds
d 50	**Derivative time setting** • Sets derivative time for OUT1. Setting the value to 0 disables the function. Not available if OUT1 is ON/OFF action. • Setting range: 0 to 300 seconds	50 seconds
ARW 50	**ARW setting** • Sets anti-reset windup for OUT1. Available only when PID is control action. • Setting range: 0 to 100%	50%
C 30	**OUT1 proportional cycle setting** • Sets proportional cycle for OUT1. For relay contact output, if the proportional cycle time is decreased, the frequency of the relay action increases, and the life of the relay contact is shortened. Not available if OUT1 is ON/OFF action or DC current output type. • Setting range: 1 to 120 seconds	Relay contact: 30sec Non-contact voltage: 3sec

c_b 30	**OUT2 proportional cycle setting** • Sets proportional cycle for OUT2. For relay contact output, if the proportional cycle time is decreased, the frequency of the relay action increases, and the life of the relay contact is shortened. Not available if the D□ option is not added or if OUT2 is ON/OFF action. • Setting range: 1 to 120 seconds	Relay contact: 30sec Non-contact voltage: 3sec
A1 0	**Alarm 1 value setting** • Sets action point for Alarm 1 output. Setting the value to 0 or 0.0 disables the function (except Process high and Process low alarm). Not available if No alarm action is selected during Alarm 1 type selection • Refer to (Table 7.2-1).	0℃
A2 0	**Alarm 2 value setting** • Sets action point for Alarm 2 output. Setting the value to 0 or 0.0 disables the function (except Process high and Process low alarm). Not available if Alarm 2 (A2) option is not added or if No alarm action is selected during Alarm 2 type selection. • Refer to (Table 7.2-1).	0℃
H 0.0 H□□.□, □XX.X alternating display	**Heater burnout alarm value setting** • Sets the heater current value for Heater burnout alarm. Setting to 0.0 disables the alarm. CT1 current value and character H are indicated alternately on the PV display. When OUT1 is ON, the CT1 current value is updated. When OUT1 is OFF, the ACS-13A memorizes the previous value when OUT1 was ON. Upon returning to set limits, the alarm will stop. Available only when the W or W3 option is added. • Rated current: 20A (0.0 to 20.0A), 50A (0.0 to 50.0A)	0.0A
H2 0.0 H2□□, □XX.X alternating display	**Heater burnout alarm 2 value setting** • Sets the heater current value for Heater burnout alarm. Setting to 0.0 disables the alarm. CT2 current value and characters H2 are indicated alternately on the PV display. When OUT1 is ON, the CT2 current value is updated. When OUT1 is OFF, the ACS-13A memorizes the previous value when OUT1 was ON. Upon returning to set limits, the alarm will stop. Available only when the W3 option is added. • Rated current: 20A (0.0 to 20.0A), 50A (0.0 to 50.0A)	0.0A

(Table 7.2-1)

Alarm action	Setting range	
High limit alarm	-(Input span) to input span℃(℉)	*1
Low limit alarm	-(Input span) to input span℃(℉)	*1
High/Low limits alarm	0 to input span℃(℉)	*1
High/Low limit range alarm	0 to input span℃(℉)	*1
Process high alarm	Input range low limit value to input range high limit value	*2
Process low alarm	Input range low limit value to input range high limit value	*2
High limit alarm with standby	-(Input span) to input span℃(℉)	*1
Low limit alarm with standby	-(Input span) to input span℃(℉)	*1
High/Low limits alarm with standby	0 to input span℃(℉)	*1

*1: For DC input, the input span is the same as the scaling span.
*2: For DC input, input range low (or high) limit value is the same as scaling low (or high) limit value.

7.3 Auxiliary function setting mode

To enter the Auxiliary function setting mode, press the key for 3 seconds while holding down the ▽ key in the PV/SV display mode.

Character	Name, Function, Setting range	Default value
Lock ----	**Set value lock selection** • Locks the set values to prevent setting errors. The setting item to be locked depends on the designation. • When Lock 1 or Lock 2 is designated, PID Auto-tuning and Auto-reset cannot be carried out. • ---- (Unlock): All set values can be changed. Loc1 (Lock 1): None of the set values can be changed. Loc2 (Lock 2): Only main setting mode can be changed. Loc3 (Lock 3): All set values can be changed. However, changed values revert to their previous value after power is turned off because they are not saved in the non-volatile memory. **Do not change any setting item in Setup mode. If any item in Setup mode is changed, it will affect other setting items such as the SV and Alarm setting.**	Unlock

ho 0.0	**Sensor correction setting**	0.0℃
	• Sets the correction value for the sensor. This corrects the input value from the sensor. When a sensor cannot be set at the exact location where control is desired, the sensor measured temperature may deviate from the temperature in the controlled location. When controlling with plural controllers, sometimes the measured temperatures (input value) do not concur with the same set value due to difference in sensor accuracy or dispersion of load capacities. In such a case, the control can be set at the desired temperature by adjusting the input value of sensors. PV= Current PV+ Sensor correction value • Setting range: -100.0 to 100.0℃ (℉) DC voltage, current input: -1000 to 1000 (The placement of the decimal point follows the selection.)	
cML NoML	**Communication protocol selection**	Shinko protocol
	• Selects communication protocol. • Not available if the C5 option is not added or if SM option is added • NoML: Shinko protocol ModA: Modbus ASCII mode ModR: Modbus RTU mode	
cMNo 0	**Instrument number setting**	0
	• Sets the instrument number individually to each instrument when communicating by connecting plural instruments in serial communication. • Not available if C5 option is not added or if SM option is added • Setting range: 0 to 95	
cMbP 96	**Communication speed selection**	9600bps
	• Selects a communication speed equal to that of the host computer. • Not available if C5 option is not added or if the SM option is added • 24: 2400bps 48: 4800bps 96: 9600bps 192: 19200bps	
cMFr 7EVN	**Data bit/Parity selection**	7 bits/Even parity
	• Selects data bit and parity. • Not available if the C5 option is not added or if SM option is added • 8NoN : 8 bits/No parity 7NoN : 7 bits/No parity 8EVN : 8 bits/Even parity 7EVN : 7 bits/Even parity 8odd : 8 bits/Odd parity 7odd : 7 bits/Odd parity	
cMbr 1	**Stop bit selection**	1
	• Selects the stop bit. • Not available if C5 option is not added or if SM option is added • Setting range: 1: 1 2: 2	

8. Running

8.1 Starting operation

After the unit is mounted to the control panel and wiring is completed, operate the unit following the procedures below.

(1) Turn the power supply to the ACS-13A ON.

After the power is turned on, the PV display indicates the input type, and the SV display indicates the input range high limit value (for thermocouple, RTD input) or scaling high limit value (for DC input) for approximately 3 seconds. See (Table 6-1) on page 7.

During this time, all outputs and the indicators are in OFF status.

Control will then start indicating the PV (process variable) on the PV display and SV (set value) on the SV display.

While control output OFF function is working, PV display indicates oFF. (Indication of the PV display depends on the selection during “Indication selection when output OFF”.)

(2) Input each set value. Input each set value. Refer to “7. Settings”.

(3) Turn the load circuit power ON.

Control action starts so as to keep the control target at the SV (set value).

8.2 Control output OFF function (Control output OUT/OFF function)

This is a function to pause the control action or turn the control output of the unused instrument of the plural units OFF even if the power to the instrument is supplied.

To turn the control output OFF, press the ⏻ key for approximately 1 second in the PV/SV display mode.

[oFF] is indicated on the PV display while the function is working.

(However, indication of the PV display depends on the selection during “Indication selection when output OFF”.)

Once the control output OFF function is enabled, the function cannot be released even if the power to the instrument is turned OFF and ON again.

To cancel the function, press the ⏻ key again for approx. 1 second.

8.3 Auto/Manual control switching

Select Auto/Manual control function during OUT/OFF key function selection in the Setup mode.
By pressing the key in the PV/SV display mode, Auto/Manual control function can be switched.
If control action is switched from automatic to manual or vice versa, balance/bumpless function works to prevent a sudden change in manipulated variables.
When automatic control is switched to manual control, the MEMO display indicates [M].
The output MV (manipulated variable) can be increased or decreased by pressing the △ or ▽ key to perform the control.
By pressing the key again, the unit reverts to the PV/SV display mode (automatic control).
Whenever the power to the controller is turned on, automatic control starts.

8.4 Indicating output MV (manipulated variable)

To indicate output MV (manipulated variable), press the key for approximately 3 seconds in the PV/SV display mode. The MEMO display indicates [MV].
By pressing the key again, the unit reverts to the PV/SV display mode.

8.5 Auto-tuning/Auto-reset Perform/Cancel

Auto-tuning/Auto-reset can be conducted in “Auto-tuning/Auto-reset selection” in the Sub setting mode.

How to perform Auto-tuning/Auto-reset

(1) To enter the Sub setting mode, press the key while pressing the △ key in the PV/SV display.
Auto-tuning/Auto-reset selection item appears.
(2) Select Auto-tuning/Auto-reset “Perform [AT/RSET]” with the △ key, and press the key.
Auto-tuning/Auto-reset will initiate.
While performing Auto-tuning/Auto-reset, the AT indicator is flashing.
When auto-tuning is not finished after 4 hours, it is automatically shut down.
Auto-reset is cancelled in approximately 4 minutes. It cannot be released while performing this function.

How to cancel Auto-tuning

(1) To enter the Sub setting mode, press the key while pressing the △ key in the PV/SV display.
Auto-tuning/Auto-reset selection item appears.
(2) Select Auto-tuning/Auto-reset “Cancel [----]” with the ▽ key, and press the key.
Auto-tuning will stop.
If Auto-tuning is cancelled during this process, each value of P, I, D and ARW reverts to the previous values before the Auto-tuning was performed.
Auto-reset is cancelled in approximately 4 minutes. It cannot be released while performing this function.

9. Auto-reset

Auto-reset is performed to correct the offset at the point at which PV indication is stabilized within the proportional band during the PD action. Since the corrected value is internally memorized, it is not necessary to perform the auto-reset again as long as the process is the same. However, when OUT1 proportional band is set to 0 or 0.0, the corrected value is cleared.

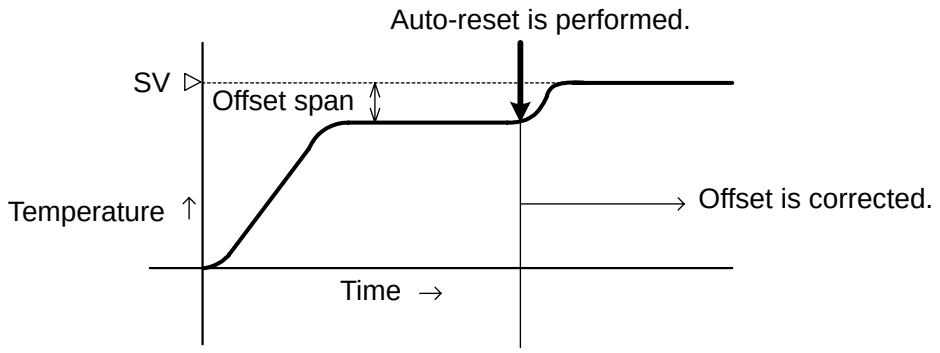

(Fig. 9-1)

10. Auto-tuning

In order to set each value of P, I, D and ARW automatically, the auto-tuning process should be made to fluctuate to obtain an optimal value. One of 3 types of fluctuation below is automatically selected. For DC input, the AT process will fluctuate around the set value for conditions of [1], [2] and [3] below.

⚠ Notice

- **Perform the auto-tuning during the trial run.**
- **During the auto-tuning, none of the setting items can be set.**
- **If power failure occurs during the auto-tuning, the tuning stops.**

[1] In the case of a large difference between the SV and processing temperature as the temperature is rising

When AT bias is set to 20℃, the AT process will fluctuate at the temperature 20℃ lower than the SV.

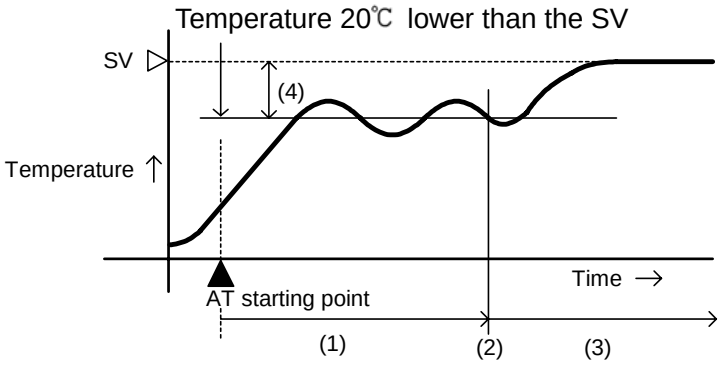

(1) Calculating PID constant
(2) PID constant calculated
(3) Controlled by the PID constant set by auto-tuning.
(4) AT bias value

(Fig. 10-1)

[2] When the control is stable or when control temperature is within ±20℃ of the SV

The AT process will fluctuate around the SV.

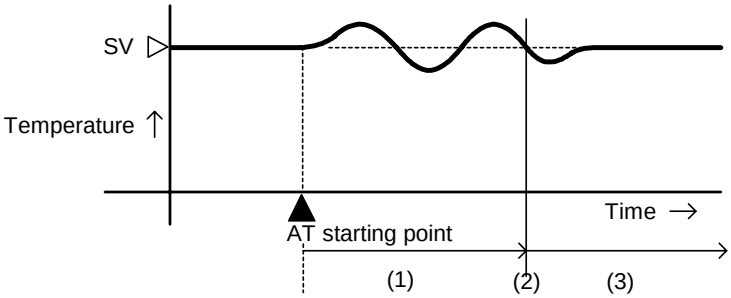

(1) Calculating PID constant
(2) PID constant calculated
(3) Controlled by the PID constant set by auto-tuning.

(Fig. 10-2)

[3] In the case of a large difference between the SV and processing temperature as the temperature is falling

When AT bias is set to 20℃, the AT process will fluctuate at the temperature 20℃ higher than the SV.

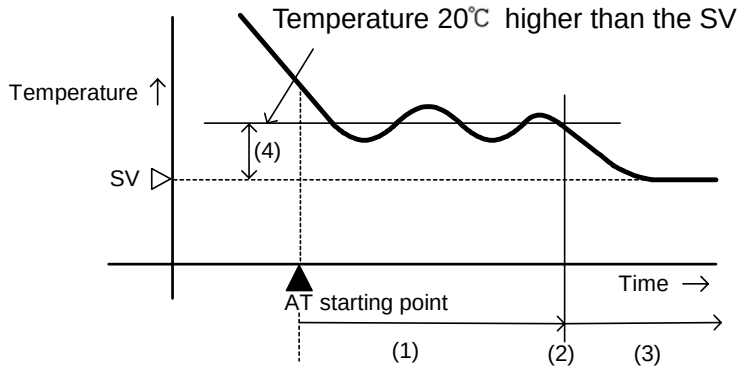

(1) Calculating PID constant
(2) PID constant calculated
(3) Controlled by the PID constant set by auto-tuning.
(4) AT bias value

(Fig. 10-3)

11. Action explanation

11.1 OUT1 action

	Reverse (Heating) action	Direct (Cooling) action
Control action	Proportional band ON OFF SV setting	Proportional band ON OFF SV setting
Relay contact output	⑦ ⑧ Cycle action is performed according to deviation	⑦ ⑧ Cycle action is performed according to deviation
Non-contact voltage output	+ ⑦ 12V DC – ⑧ + ⑦ 12/0V DC – ⑧ + ⑦ 0V DC – ⑧ Cycle action is performed according to deviation	+ ⑦ 0V DC – ⑧ + ⑦ 0/12V DC – ⑧ + ⑦ 12V DC – ⑧ Cycle action is performed according to deviation
DC current output	+ ⑦ 20mA DC – ⑧ + ⑦ 20 to 4mA DC – ⑧ + ⑦ 4mA DC – ⑧ Changes continuously according to deviation	+ ⑦ 4mA DC – ⑧ + ⑦ 4 to 20mA DC – ⑧ + ⑦ 20mA DC – ⑧ Changes continuously according to deviation
Indicator (O1) Green	Lit / Unlit	Unlit / Lit

Alternates between ON and OFF.

11.2 OUT1 ON/OFF action

	Reverse (Heating) action	Direct (Cooling) action
Control action	Hysteresis ON OFF SV setting	Hysteresis ON OFF SV setting
Relay contact output	⑦ ⑧ / ⑦ ⑧	⑦ ⑧ / ⑦ ⑧
Non-contact voltage output	+ ⑦ 12V DC – ⑧ / + ⑦ 0V DC – ⑧	+ ⑦ 0V DC – ⑧ / + ⑦ 12V DC – ⑧
DC current output	+ ⑦ 20mA DC – ⑧ / + ⑦ 4mA DC – ⑧	+ ⑦ 4mA DC – ⑧ / + ⑦ 20mA DC – ⑧
Indicator (O1) Green	Lit / Unlit	Unlit / Lit

Acts either ON or OFF.

11.3 Heater burnout alarm action

Alarm action	ON OFF Setting Small ← Load current → Large	Output Indicator	⑤ ⑥ / ⑤ ⑥ Lit / Unlit

If Heater burnout alarm and Alarm 2 (A2) option are applied together, they utilize common output (EV2) terminals.

11.4 Alarm action

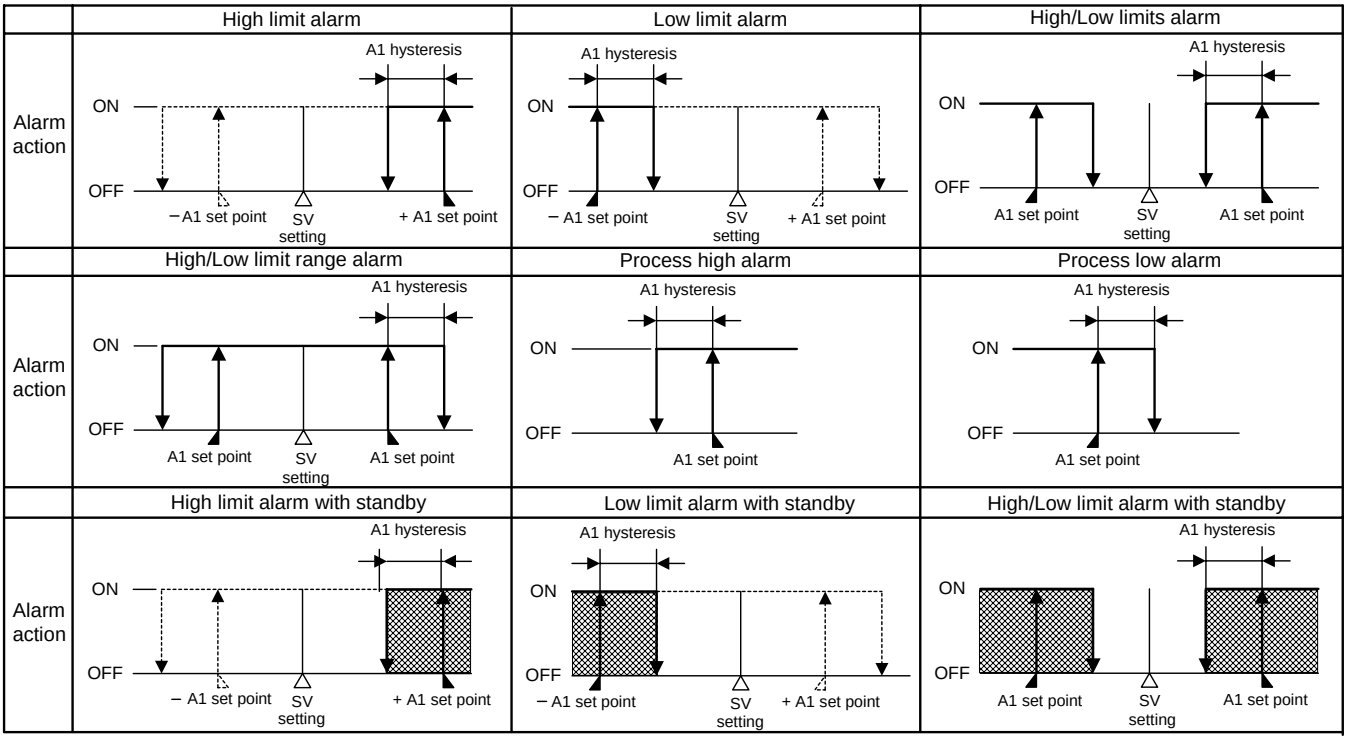

: Standby functions.

"A1" means Alarm 1. For Alarm 2, read "A2" for "A1".

EV1 indicator is for Alarm 1, and EV2 indicator is for Alarm 2.

EV1 indicator lights up when output terminals 3 and 4 are connected, and goes off when they are disconnected.
EV2 indicator lights up when output terminals 5 and 6 are connected, and goes off when they are disconnected.

11.5 OUT2 (Heating/Cooling control) action

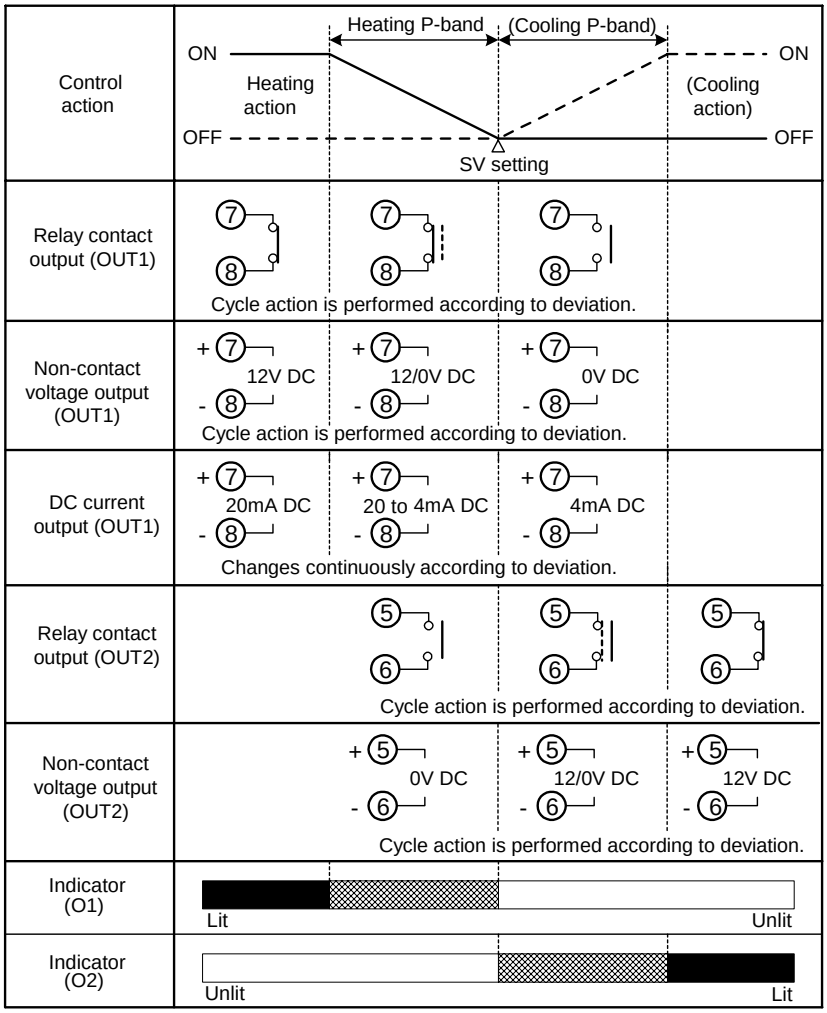

: Alternates between ON (lit) and OFF (unlit).

: Represents Heating control action.

: Represents Cooling control action.

11.6 OUT2 (Heating/Cooling control) action (When setting Dead band)

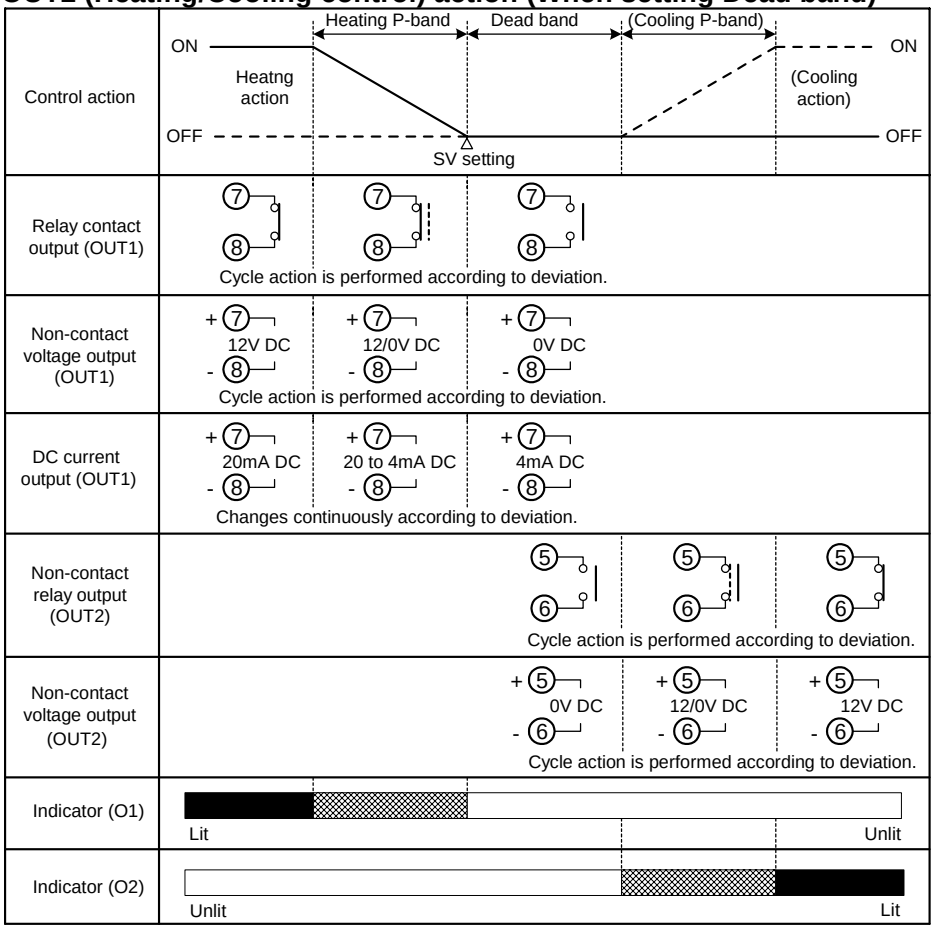

: Alternates between ON (lit) and OFF (unlit).

: Represents Heating control action.

: Represents Cooling control action.

11.7 OUT2 (Heating/Cooling control) action (When setting Overlap band)

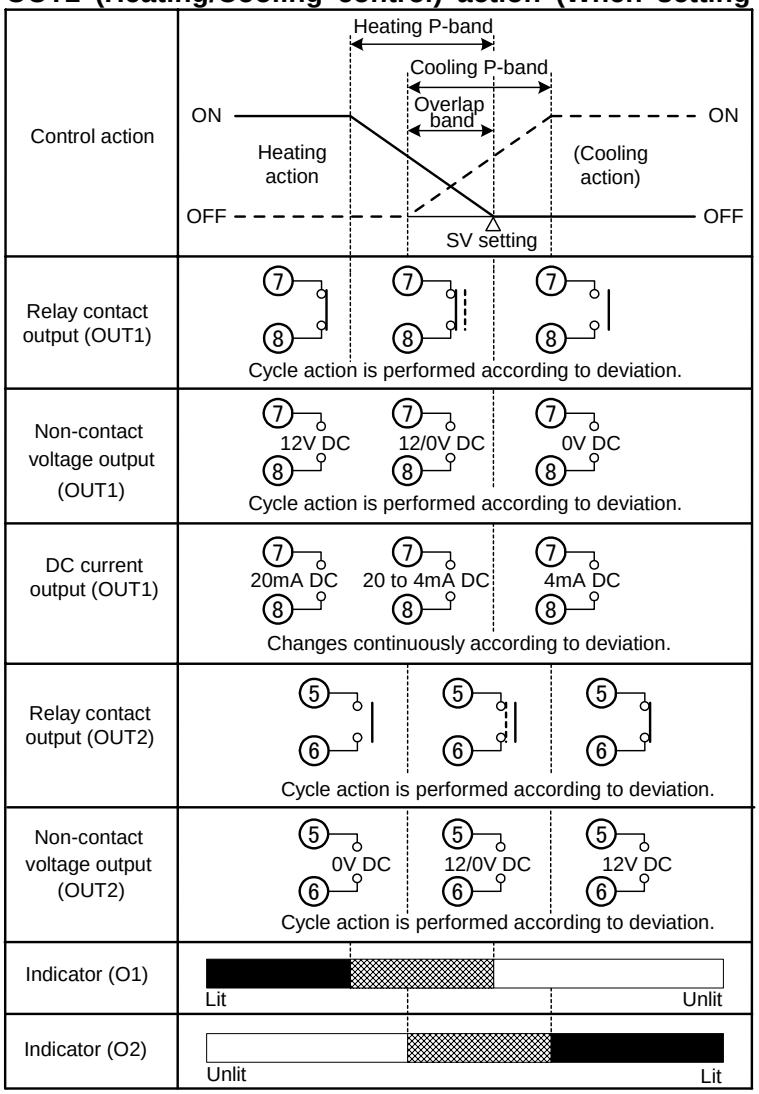

: Alternates between ON(lit) or OFF(unlit).

: Represents Heating control action.

: Represents Cooling control action.

12. Specifications

12.1 Standard specifications

Mounting method : Flush

Setting method : Input system using membrane sheet key

Display
- PV display : 11-segment backlight LCD Red/Green/Orange, character size 12.0 x 5.4 mm (H x W)
- SV display : 11-segment backlight LCD Green, character size 6.0 x 3.5 mm (H x W)
- MEMO display : 11-segment backlight LCD Green, character size 4.8 x 2.8 mm (H x W)
- Indicators : Backlight Orange

Accuracy (Setting and Indication):
- Thermocouple : Within ±0.2% of each input span±1digit, or within ±2℃ (4℉), whichever is greater
  However R, S inputs, 0 to 200℃ (400℉): Within ±6℃ (12℉)
  B input, 0 to 300℃ (600℉): Accuracy is not guaranteed
  K, J, E, T, N inputs, less than 0℃ (32℉): Within ±0.4% of input span±1digit
- RTD : Within ±0.1% of each input span±1digit, or within ±1℃ (2℉), whichever is greater
- DC current : Within ±0.2% of each input span±1digit
- DC voltage : Within ±0.2% of each input span±1digit

Input sampling period : 0.25 seconds

Input
- Thermocouple : K, J, R, S, B, E, T, N, PL-Ⅱ, C(W/Re5-26)
  External resistance, 100Ω or less
  (However, B input: External resistance, 40Ω or less)
- RTD : Pt100, JPt100, 3-wire system
  Allowable input lead wire resistance (10Ω or less per wire)
- DC current : 0 to 20mA DC, 4 to 20mA DC
  Input impedance: 50Ω [50Ω shunt resistor (sold separately) must be connected between input terminals.]
  Allowable input current, 50mA or less [When 50Ω shunt resistor (sold separately) is used]
- DC voltage : 0 to 1V DC Input impedance (1MΩ or more)
  Allowable input voltage (5V DC or less)
  Allowable signal source resistance (2kΩ or less)
  : 0 to 5V DC, 1 to 5V DC, 0 to 10V DC Input impedance (100kΩ or more)
  Allowable input voltage (15V DC or less)
  Allowable signal source resistance (100Ω or less)

Control output or Heating output (OUT1)
- Relay contact : 1a, Control capacity 3A 250V AC (resistive load)
  1A 250V AC (inductive load cosø=0.4)
  Electrical life, 100,000 times
- Non-contact voltage (For SSR drive): 12V DC±15%, Maximum 40mA (short circuit protected)
- DC current : 4 to 20mA DC, Load resistance, Maximum 550Ω

Alarm 1 output
- Action : ON/OFF action
- Hysteresis : 0.1 to 100.0℃ (℉) (Default: 1.0℃)
  DC input: 1 to 1000 (The placement of the decimal point follows the selection.)
- Output : Relay contact 1a
  Control capacity, 3A 250V AC (resistive load)
  Electrical life, 100,000 times

Control action

PID action (with auto-tuning function)
PI action: When derivative time is set to 0
PD action (with auto-reset function): When integral time is set to 0
P action (with auto-reset function): When derivative and integral time are set to 0.
ON/OFF action: When proportional band is set to 0 or 0.0

- OUT1 proportional band : 0 to 1000℃ (2000℉), 0.0 to 1000.0℃ (℉) or 0.0 to 100.0%
  (ON/OFF action when set to 0 or 0.0) (Default: 10℃)
- Integral time : 0 to 1000sec. (OFF when set to 0) (Default: 200sec.)
- Derivative time : 0 to 300sec. (OFF when set to 0) (Default: 50sec.)
- OUT1 proportional cycle : 1 to 120sec. (Default: 30sec for Relay contact, 3sec for Non-contact voltage, Not available for DC current)
- ARW : 0 to 100% (Default: 50%)
- OUT1 ON/OFF action hysteresis: 0.1 to 100.0℃ (℉) (Default: 1.0℃)
  DC input: 1 to 1000 (The placement of the decimal point follows the selection.)
- OUT1 high limit setting : 0 to 100% (DC current: -5 to 105% (Default: 100%)
- OUT1 low limit setting : 0 to 100% (DC current: -5 to 105% (Default: 0%)

Circuit insulation configuration

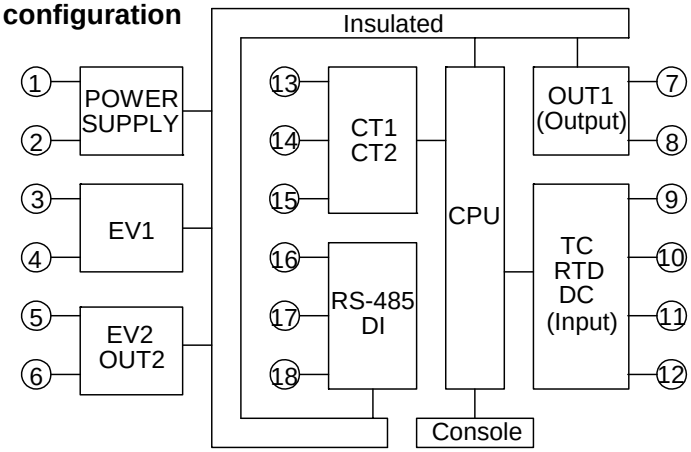

When OUT1 is a non-contact voltage or DC current and OUT2 is a non-contact voltage, OUT1 is not insulated from OUT2.
When OUT1 is a non-contact voltage or DC current, OUT1 is not insulated from RS-485, DI.
When OUT2 is a non-contact voltage, OUT2 is not insulated from RS-485, DI.

Insulation resistance: 10MΩ or more, at 500V DC
Dielectric strength : 1.5kV AC for 1 minute between input terminal and power terminal
1.5kV AC for 1 minute between output terminal and power terminal
Supply voltage : 100 to 240V AC 50/60Hz, 24V AC/DC 50/60Hz
Allowable voltage fluctuation: 100 to 240V AC: 85 to 264V AC, 24V AC/DC: 20 to 28V AC/DC
Power consumption : Approx. 8VA
Ambient temperature : 0 to 50℃ (32 to 122℉)
Ambient humidity : 35 to 85%RH (no condensation)
Weight : Approx. 120g
External dimensions : 48 x 48 x 62mm (W x H x D)
(Depth of control panel interior when gasket is used: 54.5mm)
(Depth of control panel interior when gasket is not used: 56.0mm)
Material, Color : Flame resistant resin (Case), **Color**: Black (Case)
Attached functions:

[Power failure countermeasure]: The setting data is backed up in the non-volatile IC memory.
[Self-diagnosis]: The CPU is monitored by a watchdog timer, and if the CPU's status becomes abnormal, the controller is switched to warm-up status with all outputs OFF.
[Automatic cold junction temperature compensation] (Only thermocouple input type)
This detects the temperature at the connecting terminal between the thermocouple and the instrument, and always maintains the same status as when the reference junction is located at 0℃ (32℉).
[Burnout]
When the thermocouple or RTD input is burnt out, OUT1 and OUT2 are turned OFF (for DC current output type, OUT1 low limit value) and the PV display flashes " ".
However, for the manual control, the preset MV (manipulated variable) is outputted.
When the DC current or DC voltage is disconnected, PV display flashes "- - - -" for 4 to 20mA DC and 1 to 5V DC inputs, and " " for 0 to 1V DC input. For 0 to 20mA DC, 0 to 5V DC and 0 to 10V DC inputs, the PV display indicates the value corresponding with 0mA or 0V input.
[Input abnormality indication]

Output status selection when input abnormal	Contents and Indication	Output status			
		OUT1		OUT2	
		Direct(Cooling) action	Reverse(Heating) action	Direct(Cooling) action	Reverse(Heating) action
ON	Overscale Measured value has exceeded Indication range high limit value. " " flashes.	ON (20mA) or OUT1 high limit value (*)	OFF (4mA) or OUT1 low limit value	OFF or OUT2 low limit value	ON or OUT2 high limit value (*)
OFF		OFF (4mA) or OUT1 low limit value			OFF or OUT2 low limit value
ON	Underscale Measured value has dropped below Indication range low limit value. "- - - -" flashes.	OFF (4mA) or OUT1 low limit value	ON (20mA) or OUT1 high limit value (*)	ON or OUT2 high limit value (*)	OFF or OUT2 low limit value
OFF			OFF (4mA) or OUT1 low limit value	OFF or OUT2 low limit value	

Only for DC input and DC current output type, [Output status selection when input abnormal] is usable.
For manual control, the preset MV (manipulated variable) is outputted.
(*) Outputs a value between OFF (4mA) and ON (20mA) or between OUT1 (or OUT2) low limit value and OUT1 (or OUT2) high limit value, depending on deviation.

[Indication range and Control range]

Thermocouple input: [Input range low limit value – 50℃(100℉)] to [Input range high limit value + 50℃(100℉)]
RTD input: [Input range low limit value -Input span x 1%] to [Input range high limit value + 50℃(100℉)]
DC current, voltage input:
[Scaling low limit value -Scaling span x 1%] to [Scaling high limit value +Scaling span x 10%)

[Warm-up indication]

After the power supply to the instrument is turned on, the PV display indicates the sensor input type, and SV display indicates input range high limit value (for thermocouple, RTD) or Scaling high limit value (for DC input) for approximately 3 seconds.

[Auto/Manual control switching]

Select "Auto/Manual control" during OUT/OFF key function selection in the Setup mode, then press the key in the PV/SV display mode. Auto/manual control can be switched.

[Console communication]

By connecting the USB communication cable (Model CMA) to the Console connector of the ACS-13A, the following operations can be conducted from the external computer using the Console software SWS-ACS01M.
(1) Reading and setting of SV, PID and various set values, (2) Reading of PV and action status, (3) Function change
Console communication and Serial communication (C5 option) cannot be used together.
Communication interface: C-MOS level

Accessories included:

Mounting frame 1 piece, Gasket (Front mounted to the ACS-13A) 1 piece
Instruction manual (A3 unfolded, English/Japanese) 1 copy
CT (Current transformer):
CTL-6S: 1 piece [W (20A) option] CTL-12-S36-10L1: 1 piece [W (50A) option]
CTL-6S: 2 pieces [W3 (20A) option] CTL-12-S36-10L1: 2 pieces [W3 (50A) option]

Accessories sold separately: Terminal cover, 50Ω Shunt resistor (for DC current input)
USB communication cable (CMA)

12.2 Optional specifications

Alarm 2 output (Option code: A2)

If this option is added, Heating/Cooling control (D□ option) cannot be added.
Alarm 2 and Heater burnout alarm (W, W3 option) utilize common output terminals.
Action : ON/OFF action
Hysteresis: 0.1 to 100.0℃(℉) (Default:1.0℃)
DC voltage, current input: 1 to 1000 (The placement of the decimal point follows the selection.)
Output : Relay contact, 1a Control capacity, 3A 250V AC (Resistive load) Electric life, 100,000 times

Heater burnout alarm (including sensor burnout alarm) [Option code: W(20A), W(50A), W3(20A), W3(50A)]

Monitors heater current with CT (current transformer), and detects burnout.
This alarm is also activated when indication is overscale and underscale.
This option cannot be applied to DC current output type.
If this alarm is added, Heating/Cooling control (D□ option) cannot be added.
Heater burnout alarm and Alarm 2 (A2) option utilize common output terminals.
Rating : Single phase 20A [W(20A)], Single phase 50A [W(50A)],
3-phase 20A [W3(20A)], 3-phase 50A [W3(50A)] (Must be specified)
Setting range : 20A [W(20A)], [W3(20A)]: 0.0 to 20.0A (Off when set to 0.0)
50A [W(50A)], [W3(50A)]: 0.0 to 50.0A (Off when set to 0.0)
Setting accuracy: Within ±5% of the rated value
Action : ON/OFF action
Output : Relay contact, 1a Control capacity, 3A 250V AC (resistive load), Electric life, 100,000 times

Heating/Cooling control (Option code: D□)

If this alarm is added, Alarm 2 (A2) option and Heater burnout alarm [W(20A), W(50A), W3(20A), W3(50A) option] cannot be added.
The specifications of Heating side is the same as those of OUT1.
OUT2 proportional band: 0.0 to 10.0 times OUT1 proportional band (ON/OFF action when set to 0.0)
OUT2 integral time : The same as that of OUT1.
OUT2 derivative time : The same as that of OUT1.
OUT2 proportional cycle: 1 to 120 seconds [Default: 30sec for Relay contact (DR), 3sec for Non-contact voltage (DS)]
Overlap/Dead band setting range:
Thermocouple, RTD input: -100.0 to 100.0℃ (℉)
DC current, voltage input : -1000 to 1000 (The placement of the decimal point follows the selection)
OUT2 ON/OFF action hysteresis
Thermocouple, RTD input: 0.1 to 100.0℃ (℉) (Default: 1.0℃)
DC current, voltage input : 1 to 1000 (The placement of the decimal point follows the selection)
OUT2 high limit: 0 to 100% (Default: 100%)
OUT2 low limit : 0 to 100% (Default: 0%)
OUT2 action mode selection:
One cooling action can be selected from Air cooling (linear characteristic), Oil cooling (1.5th power of the linear characteristic) and Water cooling (2nd power of the linear characteristic) by keypad operation.
Cooling output (OUT2): DR Relay contact, 1a Control capacity: 3A 250V AC(resistive load) Electric life, 100,000 times
DS Non-contact voltage (for SSR) 12V DC±15%, Max. 40mA (short circuit protected)

Serial communication (Option code: C5)

If this option is added, Set value memory external selection (SM option) cannot be added.
This option and Console communication cannot be used together.
The following operations can be carried out from the external computer. (1) Reading and setting of the SV, PID values and various set values, (2) Reading of the input value and action status, (3) Function change

Cable length : Max. communication distance 1.2km
Cable resistance: Within 50Ω (Terminator is not necessary or 120Ω or more on one side.)
Communication interface : EIA RS-485
Communication method : Half-duplex communication start-stop synchronous
Communication speed : 2400/4800/9600/19200bps (Selectable by keypad) (Default: 9600bps)
Data bit/Parity : 7 bits, 8bits/Even, Odd and No parity (Selectable by keypad) (Default: 7 bits/Even parity)
Stop bit : 1, 2 (Selectable by keypad) (Default: 1)
Communication protocol : Shinko protocol/Modbus RTU/Modbus ASCII (Selectable by keypad) (Default: Shinko protocol)

Data format

Communication protocol	Shinko protocol	Modbus ASCII	Modbus RTU
Start bit	1	1	1
Data bit	7	7 or 8	8
Parity	Yes (Even)	Yes (Even, Odd) No parity	Yes (Even, Odd) No parity
Stop bit	1	1 or 2	1 or 2

Number of connectable units : Maximum 31 units to 1 host computer
Communication error detection : Parity, checksum(Shinko protocol), LRC(Modbus ASCII), CRC-16(Modbus RTU)
Digital external setting : Receives digital set values from Shinko programmable controllers (PC-900, PCD-33A with SVTC option)

Set value memory external selection (Option code: SM)

If this option is added, Serial communication (C5 option) cannot be added.
SV, SV2, SV3 or SV4 can be selected by the external contact.
The MEMO display indicates the selected memory number.

Select the function of Contact input terminals DI2 in the “Contact input function selection” of the Setup mode, Contact input terminals DI2 can be used for a “Set value memory external selection” or for an “OUT/OFF external selection”. (Refer to “Contact input function selection on p.11.)

If Auto/Manual control function is selected during OUT/OFF key function selection in the Setup mode, externally Auto/Manual control can be switched.
Circuit current when closed: Approx. 6mA

13. Troubleshooting

If any malfunctions occur, refer to the following items after checking the power supply to the controller.

13.1 Indication

Problem	Presumed cause and solution
[oFF], nothing or PV is indicated on the PV display.	• Control output OFF function is working. Press the ⏻ key for approx. 1 second to release the function.
[- - - -] is flashing on the PV display.	• Burnout of thermocouple, RTD or disconnection of DC voltage (0 to 1V DC) Change each sensor. **How to check whether the sensor is burnt out** [Thermocouple] If the input terminal of the instrument is shorted, and if a value around room temperature is indicated, the instrument is likely to be operating normally, however, the sensor may be burnt out. [RTD] If approx. 100Ω of resistance is connected to the input terminals between A-B of the instrument and between B-B is shorted, and if approximate 0℃ (32℉) is indicated, the instrument is likely to be operating normally, however, the sensor may be burnt out. [DC voltage (0 to 1V DC)] If the input terminal of the instrument is shorted, and if a scaling low limit value is indicated, the instrument is likely to be operating normally, however, the signal wire may be disconnected. • Check whether the input terminals of thermocouple, RTD or DC voltage (0 to 1V DC) are securely mounted to the instrument input terminal. Connect the sensor terminals to the instrument input terminals securely.
[- - - -] is flashing on the PV display.	• Check whether input signal source for DC voltage (1 to 5V DC) or DC current (4 to 20mA DC) is disconnected. **How to check whether the input signal wire is disconnected** [DC voltage (1 to 5V DC)] If the input to the input terminals of the instrument is 1V DC and if a scaling low limit value is indicated, the instrument is likely to be operating normally, however, the signal wire may be disconnected.

	[DC current (4 to 20mA DC)] If the input to the input terminals of the instrument is 4mA DC and if a scaling low limit value is indicated, the instrument is likely to be operating normally, however, the signal wire may be disconnected. • Check whether input signal wire for DC voltage (1 to 5V DC) or DC current (4 to 20mA DC) is securely connected to the instrument input terminals. • Check if polarity of thermocouple or compensating lead wire is correct. • Check whether codes (A, B, B) of RTD agree with the instrument terminals.
The PV display keeps indicating the value which was set during Scaling low limit setting.	• Check whether the input signal source for DC voltage (0 to 5V DC, 0 to 10V DC) and DC current (0 to 20mA DC) is disconnected. **How to check whether the input signal wire is disconnected** [DC voltage (0 to 5V DC, 0 to 10V DC)] If the input to the input terminals of the instrument is 1V DC and if the value corresponding to 1V DC is indicated, the instrument is likely to be operating normally, however, the signal wire may be disconnected. [DC current (0 to 20mA DC)] If the input to the input terminals of the instrument is 1mA DC and if the value corresponding to 1mA DC is indicated, the instrument is likely to be operating normally, however, the signal wire may be disconnected. • Check whether the input lead wire terminals for DC voltage (0 to 5V DC, 0 to 10V DC) or DC current (0 to 20mA DC) are securely mounted to the instrument input terminals.
The indication of PV display is abnormal or unstable.	• Check whether sensor input or temperature unit (℃ or ℉) is correct. Select the sensor input and temperature unit (℃ or ℉) properly. • Sensor correcting value is unsuitable. Set it to a suitable value. • Check whether the specification of the sensor is correct. • AC leaks into the sensor circuit. Use an ungrounded type sensor. • There may be equipment that interferes with or makes noise near the controller. Keep equipment that interferes with or makes noise away from the controller.
[Err 1] is indicated on the PV display.	• Internal memory is defective. Contact our agency or us.

13.2 Key operation

Problem	Presumed cause and solution
• Unable to set the SV, P, I, D, proportional cycle or alarm setting • The values do not change by △, ▽ keys.	• Set value lock (Lock 1 or Lock 2) is designated. Release the lock in the “Set value lock selection”. • Auto-tuning or auto-reset is performing. In the case of auto-tuning, cancel auto-tuning. It takes approximately 4 minutes until auto-reset is finished.
The setting indication does not change in the input range even if the △, ▽ keys are pressed, and new values are unable to be set.	• Scaling high or low limit value in the Setup mode may be set at the point where the value does not change. Set it to a suitable value while in the Setup mode.

13.3 Control

Problem	Presumed cause and solution
Temperature does not rise.	• Sensor is out of order. Replace the sensor. • Check whether the Sensor or control output terminals are securely mounted to the instrument input terminals. Ensure that the sensor or control output terminals are mounted to the instrument input terminals securely. • Check whether the wiring of sensor or control output terminals is correct.
The control output remains in an ON status.	• OUT1 or OUT2 low limit value is set to 100% or higher in Setup mode. Set it to a suitable value.
The control output remains in an OFF status.	• OUT1 or OUT2 high limit value is set to 0% or less in Setup mode. Set it to a suitable value.

• For all other malfunctions, please contact our main office or dealers.

SHINKO NORTH AMERICA

Reg. Office: 25 Whitefriars Drive, Toronto, Ontario, Canada M3A 2L2
URL : http://www.shinkona.com
E-mail : sales@shinkona.com
Tel : 416 444-0817
Fax: 416 444-2361

APPENDIX 12 Siemens – Motor Variable Speed Drive

(Left blank intentionally)

SIEMENS

MICROMASTER 440

Parameter List **Issue 01/06**

User Documentation
6SE6400-5BB00-0BP0

Available Documentation for the MICROMASTER 440

Getting Started Guide

Is for quick commissioning with SDP and BOP.

Operating Instructions

Gives information about features of the MICROMASTER 440, Installation, Commissioning, Control modes, System Parameter structure, Troubleshooting, Specifications and available options of the MICROMASTER 440.

Parameter List

The Parameter List contains the description of all Parameters structured in functional order and a detailed description. The Parameter list also includes a series of function plans.

Catalogues

In the catalogue you will find all needs to select a certain inverter, as well as filters chokes, operator panels or communications options.

SIEMENS

MICROMASTER 440

Parameter List
User Documentation

Valid for	Issue 01/06
Converter Type MICROMASTER 440	*Software Version* V2.1

Issue 01/06

Block Diagram and Terminals

Parameter List

Function Diagrams

Faults and Alarms

Abbreviations

Warning
Please refer to all Definitions and Warnings contained in the Operating Instructions. You will find the Operating Instructions on the Docu CD delivered with your inverter. If the CD is lost, it can be ordered via your local Siemens department under the Order No. 6SE6400-5AD00-1AP0.

Information about MICROMASTER 440 is also available from:

Regional Contacts

Please get in touch with your contact for Technical Support in your Region for questions about services, prices and conditions of Technical Support.

Central Technical Support

The competent consulting service for technical issues with a broad range of requirements-based services around our products and systems.

Europe / Africa
Tel: +49 (0) 180 5050 222
Fax: +49 (0) 180 5050 223
Email: adsupport@siemens.com

America
Tel: +1 423 262 2522
Fax: +1 423 262 2589
Email: simatic.hotline@sea.siemens.com

Asia / Pacific
Tel: +86 1064 757 575
Fax: +86 1064 747 474
Email: adsupport.asia@siemens.com

Online Service & Support

The comprehensive, generally available information system over the Internet, from product support to service & support to the support tools in the shop.

http://www.siemens.com/automation/service&support

Internet Address

Customers can access technical and general information under the following address:
http://www.siemens.com/micromaster

Printed in the Federal Republic of Germany

Approved Siemens Quality for Software and Training is to DIN ISO 9001, Reg. No. 2160-01

The reproduction, transmission or use of this document, or its contents is not permitted unless authorized in writing. Offenders will be liable for damages. All rights including rights created by patent grant or registration of a utility model or design are reserved.

© Siemens AG 2001 - 2006 All Rights Reserved.

MICROMASTER® is a registered trademark of Siemens

Siemens-Aktiengesellschaft.

Other functions not described in this document may be available. However, this fact shall not constitute an obligation to supply such functions with a new control, or when servicing.

We have checked that the contents of this document correspond to the hardware and software described. There may be discrepancies nevertheless, and no guarantee can be given that they are completely identical. The information contained in this document is reviewed regularly and any necessary changes will be included in the next edition. We welcome suggestions for improvement.

Siemens handbooks are printed on chlorine-free paper that has been produced from managed sustainable forests. No solvents have been used in the printing or binding process.

Document subject to change without prior notice.

Printed in the Federal Republic of Germany

Siemens-Aktiengesellschaft.

Parameters MICROMASTER 440

This Parameter List must only be used together with the Operating Instructions of the MICROMASTER 440. Please pay special attention to the Warnings, Cautions, Notices and Notes contained in these manuals.

Table of Contents

1 Block Diagram and Terminals 7
1.1 Block Diagram 7
1.2 Power Terminals 8
1.3 Control Terminals 11

2 Parameters 12
2.1 Introduction to MICROMASTER System Parameters 12
2.2 Quick commissioning (P0010 = 1) 15
2.3 Command and Drive Datasets - Overview 17
2.4 Binector Input Parameters 21
2.5 Connector Input Parameters 22
2.6 Binector Output Parameters 22
2.7 Connector Output Parameters 23
2.8 Connector/Binector Output Parameters 24

3 Parameter Description 25
3.1 Common parameters 25
3.2 Diagnosis parameters 29
3.3 Inverter parameters (HW) 42
3.4 Motor parameters 50
3.5 Speed encoder 67
3.6 Application macros 69
3.7 Motor temperature 69
3.8 Command source 75
3.9 Digital inputs 77
3.10 Digital outputs 84
3.11 Analog inputs 86
3.12 Analog outputs 93
3.13 Parameter / command / drive data set 97
3.14 BICO command parameters 102
3.15 Communication parameters 105
3.16 Setpoint source 110
3.17 Fixed frequencies 113
3.18 Motorized potentiometer (MOP) 120
3.19 JOG 122
3.20 Setpoint channel 125

3.21 Ramp-function generator ... 131
3.22 Flying restart ... 136
3.23 Automatic restart ... 139
3.24 Motor holding brake ... 141
3.25 DC braking ... 143
3.26 Compound braking ... 146
3.27 Dynamic braking ... 147
3.28 Vdc controller ... 148
3.29 Control mode ... 153
3.29.1 V/f control technique ... 156
3.29.1.1 Slip compensation ... 162
3.29.1.2 Resonance damping ... 163
3.29.1.3 Imax controller ... 164
3.29.1.4 Soft starting ... 166
3.29.2 Field-orientated vector control ... 167
3.29.2.1 Speed controller with/without encoder ... 168
3.29.2.2 Droop ... 170
3.29.2.3 Speed controller pre-control ... 172
3.29.2.4 Torque control ... 173
3.29.2.5 Supplementary torque setpoint ... 176
3.29.2.6 Torque / power limiting ... 177
3.29.2.7 Flux control ... 179
3.29.2.8 Current controller ... 182
3.29.2.9 Motor model ... 183
3.30 Inverter parameters (Modulator) ... 188
3.31 Motor data identification ... 189
3.32 Speed optimization ... 192
3.33 Reference parameters ... 192
3.34 Communication parameters (USS, CB) ... 195
3.35 Faults, Alarms, Monitoring ... 207
3.36 Load torque monitoring ... 218
3.37 Technology controller (PID controller) ... 222
3.38 Positioning down ramp ... 239
3.39 Free function blocks (FFB) ... 241
3.40 Inverter parameters ... 257

4 Function Diagrams ... 259

5 Faults and Alarms ... 307
5.1 Fault messages ... 307
5.2 Alarm Messages ... 315

6 Abbreviations ... 321

1 Block Diagram and Terminals

1.1 Block Diagram

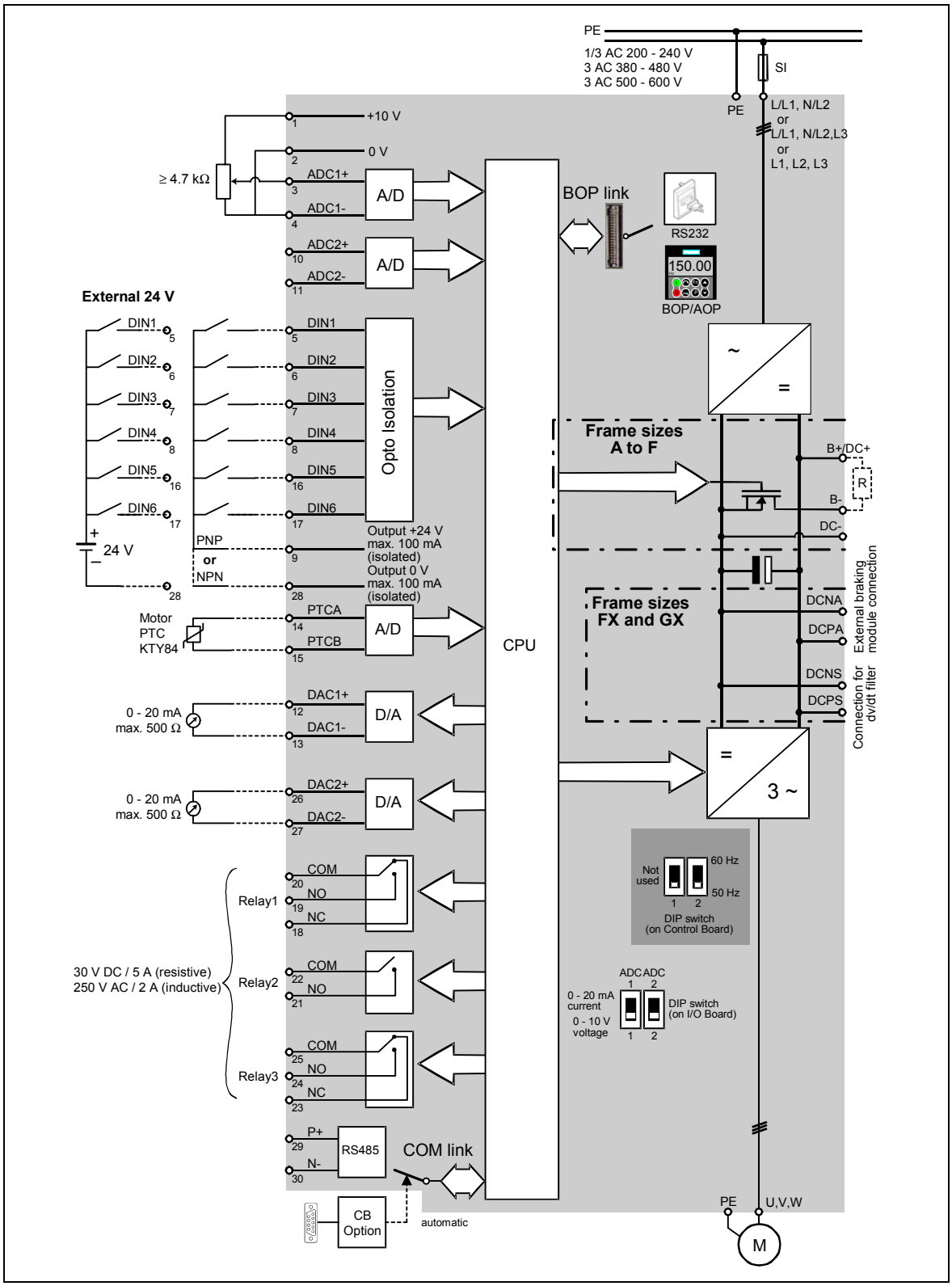

1.2 Power Terminals

You can gain access to the mains and motor terminals by removing the front covers.

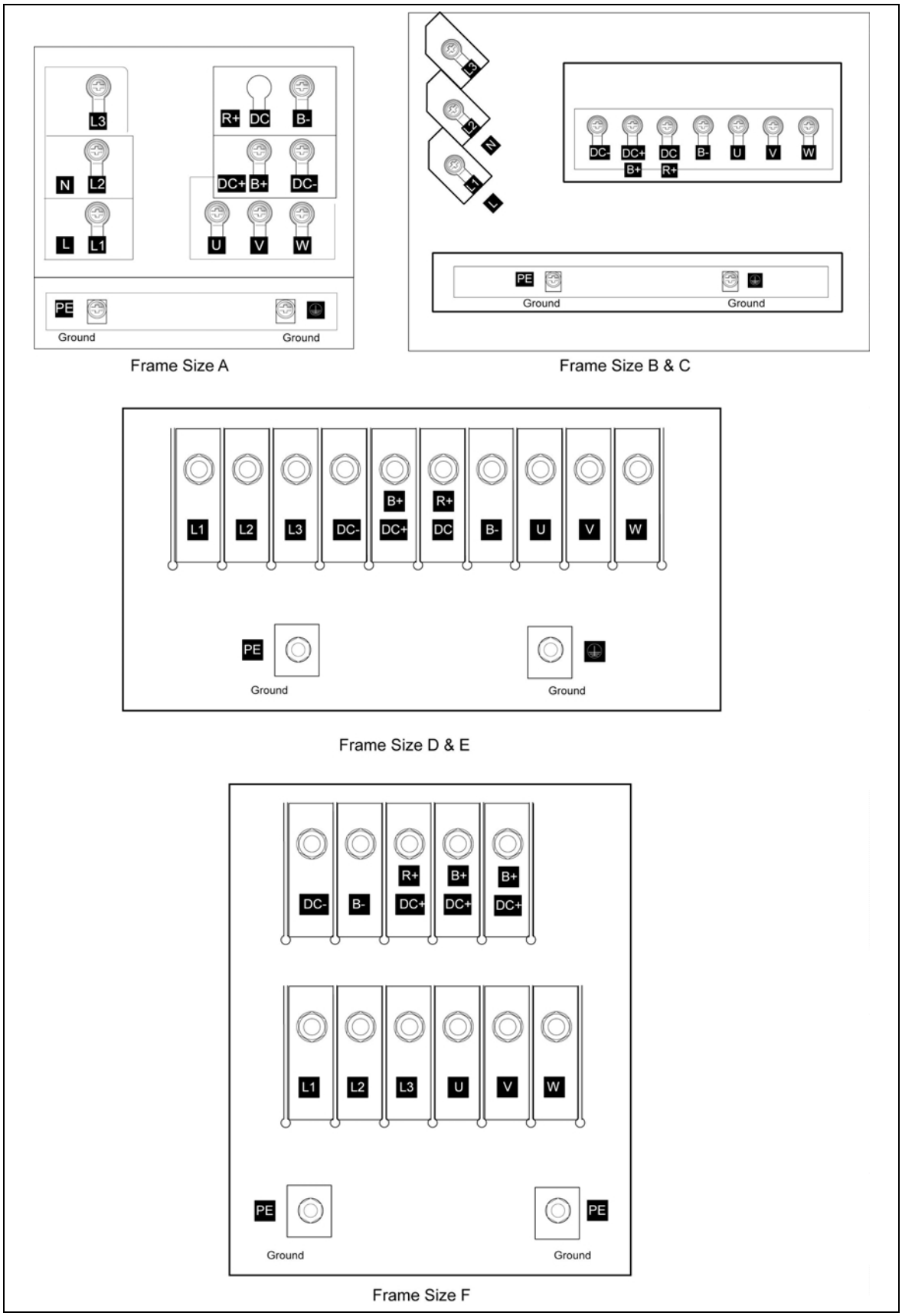

Fig. 1-1 Frame Size A - F

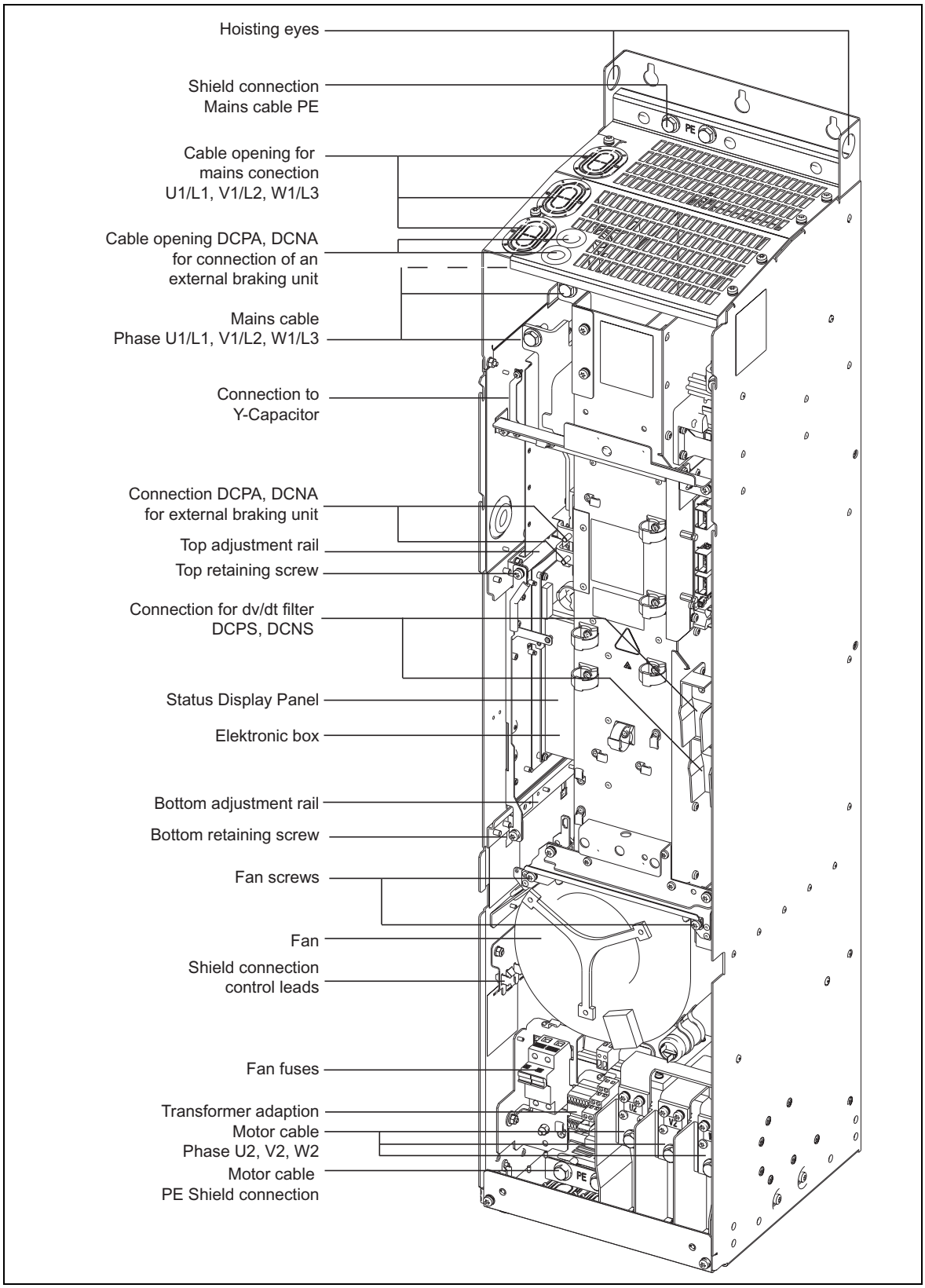

Fig. 1-2 Frame Size FX

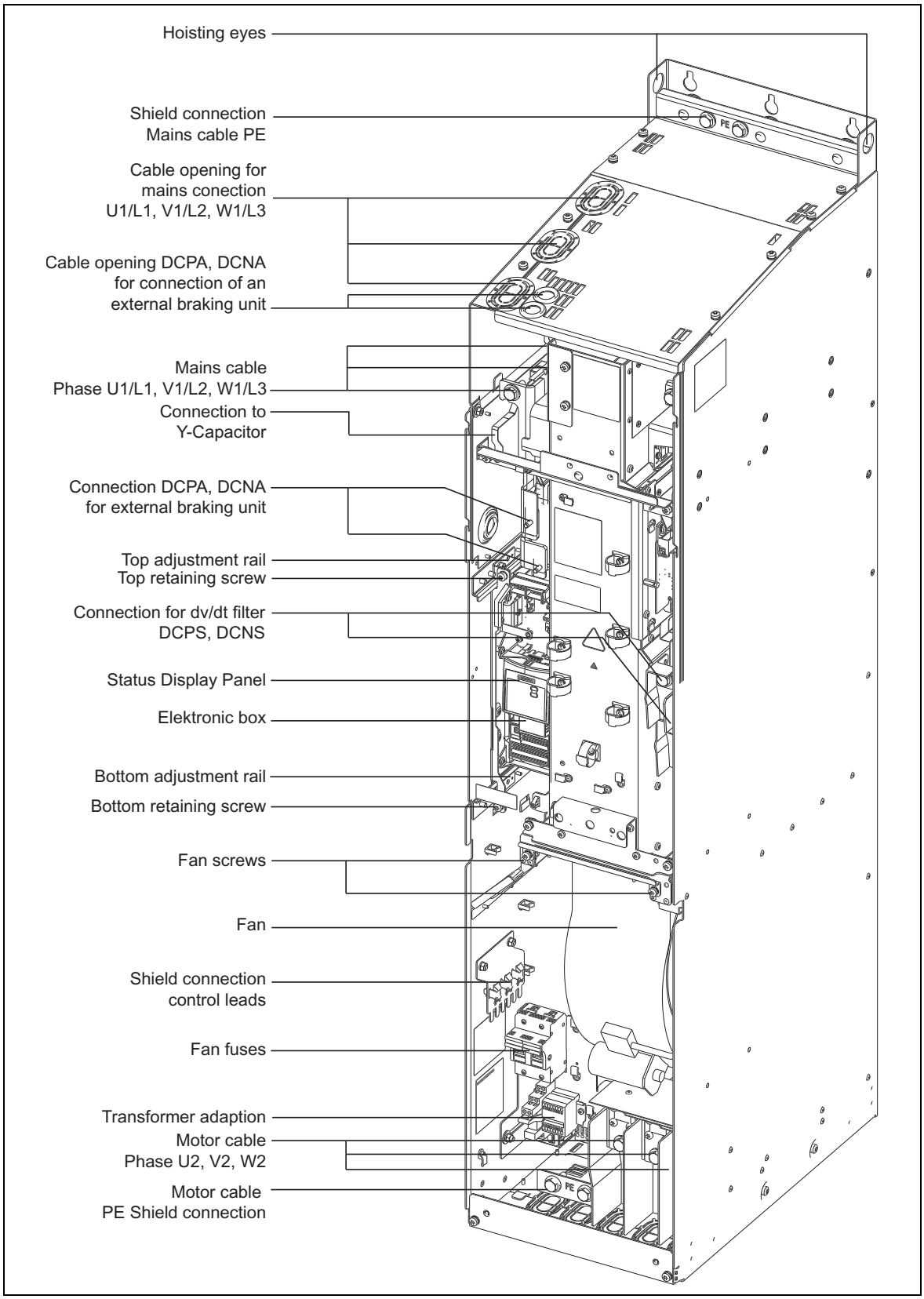

Fig. 1-3 Frame Size GX

1.3 Control Terminals

Terminal	Designation	Function
1	-	Output +10 V
2	-	Output 0 V
3	ADC1+	Analog input 1 (+)
4	ADC1-	Analog input 1 (-)
5	DIN1	Digital input 1
6	DIN2	Digital input 2
7	DIN3	Digital input 3
8	DIN4	Digital input 4
9	-	Isolated output +24 V / max. 100 mA
10	ADC2+	Analog input 2 (+)
11	ADC2-	Analog input 2 (-)
12	DAC1+	Analog output 1 (+)
13	DAC1-	Analog output 1 (-)
14	PTCA	Connection for PTC / KTY84
15	PTCB	Connection for PTC / KTY84
16	DIN5	Digital input 5
17	DIN6	Digital input 6
18	DOUT1/NC	Digital output 1 / NC contact
19	DOUT1/NO	Digital output 1 / NO contact
20	DOUT1/COM	Digital output 1 / Changeover contact
21	DOUT2/NO	Digital output 2 / NO contact
22	DOUT2/COM	Digital output 2 / Changeover contact
23	DOUT3/NC	Digital output 3 / NC contact
24	DOUT3/NO	Digital output 3 / NO contact
25	DOUT3/COM	Digital output 3 / Changeover contact
26	DAC2+	Analog output 2 (+)
27	DAC2-	Analog output 2 (-)
28	-	Isolated output 0 V / max. 100 mA
29	P+	RS485 port
30	P-	RS485 port

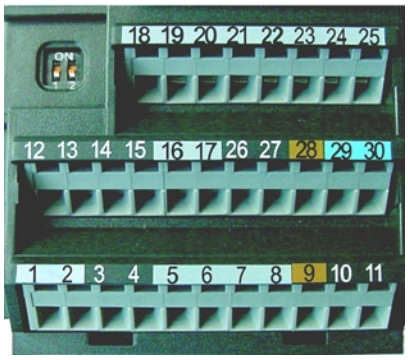

Fig. 1-4 Control terminals of MICROMASTER 440

2 Parameters

2.1 Introduction to MICROMASTER System Parameters

The layout of the parameter description is as follows.

1 Par number [index]	**2 Parameter name**			**9 Min:**	12 Level: **2**
	3 CStat:	**5 Datatype**	**7 Unit:**	**10 Def:**	
	4 P-Group:	**6 active:**	**8 Quick Comm:**	**11 Max:**	
	13	Description:			

1. **Parameter number**
   Indicates the relevant parameter number. The numbers used are 4-digit numbers in the range 0000 to 9999. Numbers prefixed with an “r” indicate that the parameter is a “read-only” parameter, which displays a particular value but cannot be changed directly by specifying a different value via this parameter number (in such cases, dashes “-“ are entered at the points “Unit”, “Min”, “Def” and “Max” in the header of the parameter description.
   All other parameters are prefixed with a “P”. The values of these parameters can be changed directly in the range indicated by the “Min” and “Max” settings in the header.

   [index] indicates that the parameter is an indexed parameter and specifies the number of indices available.
2. **Parameter name**
   Indicates the name of the relevant parameter.
   Certain parameter names include the following abbreviated prefixes: BI, BO, CI, and CO followed by a colon.

   These abbreviations have the following meanings:

BI	=	P9999 (0)	Binector input, i.e. parameter selects the source of a binary signal
BO	=	r9999	Binector output, i.e. parameter connects as a binary signal
CI	=	r9999 (999:9)	Connector input, i.e. parameter selects the source of an analog signal
CO	=	r9999 [99]	Connector output, i.e. parameter connects as an analog signal
CO/BO	=	r9999 r9999	Connector/Binector output, i.e. parameter connects as an analog signal and/or as a binary signal

   To make use of BiCo you will need access to the full parameter list. At this level many new parameter settings are possible, including BiCo functionality. BiCo functionality is a different, more flexible way of setting and combining input and output functions. It can be used in most cases in conjunction with the simple, level 2 settings.

   The BiCo system allows complex functions to be programmed. Boolean and mathematical relationships can be set up between inputs (digital, analog, serial etc.) and outputs (inverter current, frequency, analog output, relays, etc.).

3. **CStat**
   Commissioning status of the parameter. Three states are possible:
   Commissioning C
   Run U
   Ready to run T
   This indicates when the parameter can be changed. One, two or all three states may be specified. If all three states are specified, this means that it is possible to change this parameter setting in all three inverter states
4. **P-Group**
   Indicates the functional group of the particular.

   Note
   Parameter P0004 (parameter filter) acts as a filter and focuses access to parameters according to the functional group selected.

5. **Datatype**
   The data types available are shown in the table below.

Notation	Meaning
U16	16-bit unsigned
U32	32-bit unsigned
I16	16-bit integer
I32	32-bit integer
Float	Floating point

6. **Active**
   Indicates whether
   - Immediately changes to the parameter values take effective immediately after they have been entered, or
   - Confirm the “P” button on the operator panel (BOP or AOP) must be pressed before the changes take effect.
7. **Unit**
   Indicates the unit of measure applicable to the parameter values
8. **QuickComm**
   Indicates whether or not (Yes or No) a parameter can only be changed during quick commissioning, i.e. when P0010 (parameter groups for commissioning) is set to 1 (quick commissioning).
9. **Min**
   Indicates the minimum value to which the parameter can be set.
10. **Def**
    Indicates the default value, i.e. the value which applies if the user does not specify a particular value for the parameter.
11. **Max**
    Indicates the maximum value to which the parameter can be set.
12. **Level**
    Indicates the level of user access. There are four access levels: Standard, Extended, Expert and Service. The number of parameters that appear in each functional group depends on the access level set in P0003 (user access level).

13. **Description**
    The parameter description consists of the sections and contents listed below. Some of these sections and contents are optional and will be omitted on a case-to-case basis if not applicable.

Description:	Brief explanation of the parameter function.
Diagram:	Where applicable, diagram to illustrate the effects of parameters on a characteristic curve, for example
Settings:	List of applicable settings. These include Possible settings, Most common settings, Index and Bitfields
Example:	Optional example of the effects of a particular parameter setting.
Dependency:	Any conditions that must be satisfied in connection with this parameter. Also any particular effects, which this parameter has on other parameter(s) or which other parameters have on this one.
Warning / Caution / Notice / Note:	Important information which must be heeded to prevent personal injury or damage to equipment / specific information which should be heeded in order to avoid problems / information which may be helpful to the user
More details:	Any sources of more detailed information concerning the particular parameter.

Operators

The following operators are used in the parameter list to represent mathematical interrelationships:

Arithmetic operators

+	Addition
-	Subtraction
*	Multiplication
/	Division

Comparison operators

>	Greater than
>=	Greater than / equal to
<	Less than
<=	Less than / equal to

Equivalence operators

==	Equal to
!=	Not equal to

Logical operators

&&	AND logic operation
||	OR logic operation

2.2 Quick commissioning (P0010 = 1)

The following parameters are necessary for quick commissioning (P0010 = 1).

Quick commissioning (P0010 = 1)

Par.-No.	Name	Access level	Cstat
P0100	Europe / North America	1	C
P0205	Inverter application	3	C
P0300	Select motor type	2	C
P0304	Motor voltage rating	1	C
P0305	Motor current rating	1	C
P0307	Motor power rating	1	C
P0308	Motor cosPhi rating	1	C
P0309	Motor efficiency rating	1	C
P0310	Motor frequency rating	1	C
P0311	Motor speed rating	1	C
P0320	Motor magnetizing current	3	CT
P0335	Motor cooling	2	CT
P0640	Motor overload factor [%]	2	CUT
P0700	Selection of command source	1	CT
P1000	Selection of frequency setpoint	1	CT
P1080	Min. speed	1	CUT
P1082	Max. speed	1	CT
P1120	Ramp-up time	1	CUT
P1121	Ramp-down time	1	CUT
P1135	OFF3 ramp-down time	2	CUT
P1300	Control mode	2	CT
P1500	Selection of torque setpoint	2	CT
P1910	Select motor data identification	2	CT
P1960	Speed control optimisation	3	CT
P3900	End of quick commissioning	1	C

When P0010 = 1 is chosen, P0003 (user access level) can be used to select the parameters to be accessed. This parameter also allows selection of a user-defined parameter list for quick commissioning.

At the end of the quick commissioning sequence, set P3900 = 1 to carry out the necessary motor calculations and clear all other parameters (not included in P0010 = 1) to their default settings.

Note
This applies only in Quick Commissioning mode.

Reset to Factory default

To reset all parameters to the factory default settings; the following parameters should be set as follows:

Set P0010 = 30

Set P0970 = 1

Note
The reset process takes approximately 10 seconds to complete. Reset to Factory default

Seven-segment display

The seven-segment display is structured as follows:

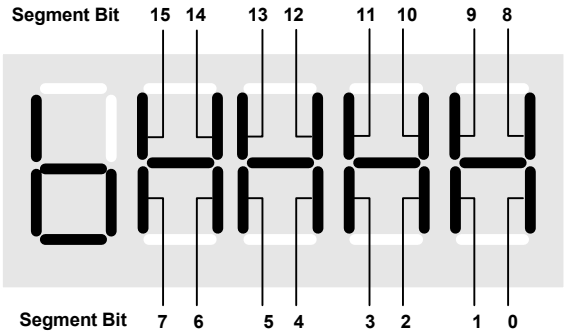

The significance of the relevant bits in the display is described in the status and control word parameters.

2.3 Command and Drive Datasets - Overview

Command Datasets (CDS)

ParNo	Parameter text	1)
P0700[3]	Selection of command source	X
P0701[3]	Function of digital input 1	X
P0702[3]	Function of digital input 2	X
P0703[3]	Function of digital input 3	X
P0704[3]	Function of digital input 4	X
P0705[3]	Function of digital input 5	X
P0706[3]	Function of digital input 6	X
P0707[3]	Function of digital input 7	X
P0708[3]	Function of digital input 8	X
P0719[3]	Selection of cmd. & freq. setp.	X
P0731[3]	BI: Function of digital output 1	X
P0732[3]	BI: Function of digital output 2	X
P0733[3]	BI: Function of digital output 3	X
P0800[3]	BI: Download parameter set 0	–
P0801[3]	BI: Download parameter set 1	–
P0840[3]	BI: ON/OFF1	X
P0842[3]	BI: ON reverse/OFF1	X
P0844[3]	BI: 1. OFF2	X
P0845[3]	BI: 2. OFF2	X
P0848[3]	BI: 1. OFF3	X
P0849[3]	BI: 2. OFF3	X
P0852[3]	BI: Pulse enable	X
P1000[3]	Selection of frequency setpoint	X
P1020[3]	BI: Fixed freq. selection Bit 0	X
P1021[3]	BI: Fixed freq. selection Bit 1	X
P1022[3]	BI: Fixed freq. selection Bit 2	X
P1023[3]	BI: Fixed freq. selection Bit 3	X
P1026[3]	BI: Fixed freq. selection Bit 4	X
P1028[3]	BI: Fixed freq. selection Bit 5	X
P1035[3]	BI: Enable MOP (UP-command)	X
P1036[3]	BI: Enable MOP (DOWN-command)	X
P1055[3]	BI: Enable JOG right	X
P1056[3]	BI: Enable JOG left	X
P1070[3]	CI: Main setpoint	X
P1071[3]	CI: Main setpoint scaling	X

ParNo	Parameter text	1)
P1074[3]	BI: Disable additional setpoint	X
P1075[3]	CI: Additional setpoint	X
P1076[3]	CI: Additional setpoint scaling	X
P1110[3]	BI: Inhibit neg. freq. setpoint	X
P1113[3]	BI: Reverse	X
P1124[3]	BI: Enable JOG ramp times	X
P1140[3]	BI: RFG enable	X
P1141[3]	BI: RFG start	X
P1142[3]	BI: RFG enable setpoint	X
P1230[3]	BI: Enable DC braking	X
P1330[3]	CI: Voltage setpoint	X
P1477[3]	BI: Set integrator of n-ctrl.	X
P1478[3]	CI: Set integrator value n-ctrl.	X
P1500[3]	Selection of torque setpoint	X
P1501[3]	BI: Change to torque control	X
P1503[3]	CI: Torque setpoint	X
P1511[3]	CI: Additional torque setpoint	X
P1522[3]	CI: Upper torque limit	–
P1523[3]	CI: Lower torque limit	–
P2103[3]	BI: 1. Faults acknowledgement	X
P2104[3]	BI: 2. Faults acknowledgement	X
P2106[3]	BI: External fault	X
P2200[3]	BI: Enable PID controller	–
P2220[3]	BI: Fixed PID setp. select Bit 0	X
P2221[3]	BI: Fixed PID setp. select Bit 1	X
P2222[3]	BI: Fixed PID setp. select Bit 2	X
P2223[3]	BI: Fixed PID setp. select Bit 3	X
P2226[3]	BI: Fixed PID setp. select Bit 4	X
P2228[3]	BI: Fixed PID setp. select Bit 5	X
P2235[3]	BI: Enable PID-MOP (UP-cmd)	X
P2236[3]	BI: Enable PID-MOP (DOWN-cmd)	X
P2253[3]	CI: PID setpoint	X
P2254[3]	CI: PID trim source	X
P2264[3]	CI: PID feedback	X

1) X = Parameters will be altered during data set switchover (CDS) in the state "Run"
– = Parameters will be altered in the state "Ready" only

Drive Datasets (DDS)

ParNo	Parameter text
P0005[3]	Display selection
r0035[3]	CO: Act. motor temperature
P0291[3]	Inverter protection
P0300[3]	Select motor type
P0304[3]	Rated motor voltage
P0305[3]	Rated motor current
P0307[3]	Rated motor power
P0308[3]	Rated motor cosPhi
P0309[3]	Rated motor efficiency
P0310[3]	Rated motor frequency
P0311[3]	Rated motor speed
r0313[3]	Motor pole pairs
P0314[3]	Motor pole pair number
P0320[3]	Motor magnetizing current
r0330[3]	Rated motor slip
r0331[3]	Rated magnetization current
r0332[3]	Rated power factor
r0333[3]	Rated motor torque
P0335[3]	Motor cooling
P0340[3]	Calculation of motor parameters
P0341[3]	Motor inertia [kg*m^2]
P0342[3]	Total/motor inertia ratio
P0344[3]	Motor weight
r0345[3]	Motor start-up time
P0346[3]	Magnetization time
P0347[3]	Demagnetization time
P0350[3]	Stator resistance (line-to-line)
P0352[3]	Cable resistance
P0354[3]	Rotor resistance
P0356[3]	Stator leakage inductance
P0358[3]	Rotor leakage inductance
P0360[3]	Main inductance
P0362[3]	Magnetizing curve flux 1
P0363[3]	Magnetizing curve flux 2
P0364[3]	Magnetizing curve flux 3
P0365[3]	Magnetizing curve flux 4
P0366[3]	Magnetizing curve imag 1
P0367[3]	Magnetizing curve imag 2
P0368[3]	Magnetizing curve imag 3
P0369[3]	Magnetizing curve imag 4

ParNo	Parameter text
r0370[3]	Stator resistance [%]
r0372[3]	Cable resistance [%]
r0373[3]	Rated stator resistance [%]
r0374[3]	Rotor resistance [%]
r0376[3]	Rated rotor resistance [%]
r0377[3]	Total leakage reactance [%]
r0382[3]	Main reactance [%]
r0384[3]	Rotor time constant
r0386[3]	Total leakage time constant
P0400[3]	Select encoder type
P0408[3]	Encoder pulses per revolution
P0491[3]	Reaction on freq. signal loss
P0492[3]	Allowed frequency difference
P0494[3]	Delay frequency loss reaction
P0500[3]	Technological application
P0530[3]	Unit for positioning signal
P0531[3]	Unit conversion
P0601[3]	Motor temperature sensor
P0604[3]	Threshold motor temperature
P0625[3]	Ambient motor temperature
P0626[3]	Overtemperature stator iron
P0627[3]	Overtemperature stator winding
P0628[3]	Overtemperature rotor winding
r0630[3]	CO: Ambient temperature
r0631[3]	CO: Stator iron temperature
r0632[3]	CO: Stator winding temperature
r0633[3]	CO: Rotor winding temperature
P0640[3]	Motor overload factor [%]
P1001[3]	Fixed frequency 1
P1002[3]	Fixed frequency 2
P1003[3]	Fixed frequency 3
P1004[3]	Fixed frequency 4
P1005[3]	Fixed frequency 5
P1006[3]	Fixed frequency 6
P1007[3]	Fixed frequency 7
P1008[3]	Fixed frequency 8
P1009[3]	Fixed frequency 9
P1010[3]	Fixed frequency 10
P1011[3]	Fixed frequency 11
P1012[3]	Fixed frequency 12

ParNo	Parameter text
P1013[3]	Fixed frequency 13
P1014[3]	Fixed frequency 14
P1015[3]	Fixed frequency 15
P1031[3]	Setpoint memory of the MOP
P1040[3]	Setpoint of the MOP
P1058[3]	JOG frequency right
P1059[3]	JOG frequency left
P1060[3]	JOG ramp-up time
P1061[3]	JOG ramp-down time
P1080[3]	Min. frequency
P1082[3]	Max. frequency
P1091[3]	Skip frequency 1
P1092[3]	Skip frequency 2
P1093[3]	Skip frequency 3
P1094[3]	Skip frequency 4
P1101[3]	Skip frequency bandwidth
P1120[3]	Ramp-up time
P1121[3]	Ramp-down time
P1130[3]	Ramp-up initial rounding time
P1131[3]	Ramp-up final rounding time
P1132[3]	Ramp-down initial rounding time
P1133[3]	Ramp-down final rounding time
P1134[3]	Rounding type
P1135[3]	OFF3 ramp-down time
P1202[3]	Motor-current: Flying start
P1203[3]	Search rate: Flying start
P1232[3]	DC braking current
P1233[3]	Duration of DC braking
P1234[3]	DC braking start frequency
P1236[3]	Compound braking current
P1240[3]	Configuration of Vdc controller
P1243[3]	Dynamic factor of Vdc-max
P1245[3]	Switch on level kin. buffering
r1246[3]	CO:Switch-on level kin buffering
P1247[3]	Dyn. factor of kinetic buffering
P1250[3]	Gain of Vdc-controller
P1251[3]	Integration time Vdc-controller
P1252[3]	Differential time Vdc-controller
P1253[3]	Vdc-controller output limitation
P1256[3]	Reaction of kinetic buffering

ParNo	Parameter text
P1257[3]	Freq limit for kinetic buffering
P1300[3]	Control mode
P1310[3]	Continuous boost
P1311[3]	Acceleration boost
P1312[3]	Starting boost
P1316[3]	Boost end frequency
P1320[3]	Programmable V/f freq. coord. 1
P1321[3]	Programmable V/f volt. coord. 1
P1322[3]	Programmable V/f freq. coord. 2
P1323[3]	Programmable V/f volt. coord. 2
P1324[3]	Programmable V/f freq. coord. 3
P1325[3]	Programmable V/f volt. coord. 3
P1333[3]	Start frequency for FCC
P1335[3]	Slip compensation
P1336[3]	Slip limit
P1338[3]	Resonance damping gain V/f
P1340[3]	Imax freq. controller prop. gain
P1341[3]	Imax freq. ctrl. integral time
P1345[3]	Imax voltage ctrl. prop. gain
P1346[3]	Imax voltage ctrl. integral time
P1350[3]	Voltage soft start
P1400[3]	Configuration of speed control
P1442[3]	Filter time for act. speed
P1452[3]	Filter time for act. freq (SLVC)
P1460[3]	Gain speed controller
P1462[3]	Integral time speed controller
P1470[3]	Gain speed controller (SLVC)
P1472[3]	Integral time n-ctrl. (SLVC)
P1488[3]	Droop input source
P1489[3]	Droop scaling
P1492[3]	Enable droop
P1496[3]	Scaling accel. precontrol
P1499[3]	Scaling accel. torque control
P1520[3]	CO: Upper torque limit
P1521[3]	CO: Lower torque limit
P1525[3]	Scaling lower torque limit
P1530[3]	Motoring power limitation
P1531[3]	Regenerative power limitation
P1570[3]	CO: Fixed value flux setpoint
P1574[3]	Dynamic voltage headroom

ParNo	Parameter text
P1580[3]	Efficiency optimization
P1582[3]	Smooth time for flux setpoint
P1596[3]	Int. time field weak. controller
P1610[3]	Continuous torque boost (SLVC)
P1611[3]	Acc. torque boost (SLVC)
P1654[3]	Smooth time for Isq setpoint
P1715[3]	Gain current controller
P1717[3]	Integral time current controller
P1745[3]	Variance flux error
P1750[3]	Control word of motor model
P1755[3]	Start-freq. motor model (SLVC)
P1756[3]	Hyst.-freq. motor model (SLVC)
P1758[3]	Chng-ov. del. t SLVC op.-lp ctrl
P1759[3]	Chng-ov. del. t SLVC cl.-lp ctrl
P1764[3]	Kp of n-adaption (SLVC)
P1767[3]	Tn of n-adaption (SLVC)
P1780[3]	Control word of Rs/Rr-adaption
P1781[3]	Tn of Rs-adaption
P1786[3]	Tn of Xm-adaption
P1803[3]	Max. modulation
P1820[3]	Reverse output phase sequence
P1909[3]	Ctrl. word of motor data ident.
P2000[3]	Reference frequency
P2001[3]	Reference voltage
P2002[3]	Reference current
P2003[3]	Reference torque
P2004[3]	Reference power
P2150[3]	Hysteresis frequency f_hys
P2153[3]	Time-constant frequency filter
P2155[3]	Threshold frequency f_1
P2156[3]	Delay time of threshold freq f_1
P2157[3]	Threshold frequency f_2
P2158[3]	Delay time of threshold freq f_2
P2159[3]	Threshold frequency f_3
P2160[3]	Delay time of threshold freq f_3
P2161[3]	Min. threshold for freq. setp.
P2162[3]	Hysteresis freq. for overfreq.
P2163[3]	Entry freq. for perm. deviation
P2164[3]	Hysteresis frequency deviation
P2165[3]	Delay time permitted deviation
P2166[3]	Delay time ramp up completed
P2167[3]	Switch-off frequency f_off
P2168[3]	Delay time T_off

ParNo	Parameter text
P2170[3]	Threshold current I_thresh
P2171[3]	Delay time current
P2172[3]	Threshold DC-link voltage
P2173[3]	Delay time DC-link voltage
P2174[3]	Torque threshold M_thresh
P2176[3]	Delay time for torque threshold
P2177[3]	Delay time for motor is blocked
P2178[3]	Delay time for motor pulled out
P2181[3]	Belt failure detection mode
P2182[3]	Belt threshold frequency 1
P2183[3]	Belt threshold frequency 2
P2184[3]	Belt threshold frequency 3
P2185[3]	Upper torque threshold 1
P2186[3]	Lower torque threshold 1
P2187[3]	Upper torque threshold 2
P2188[3]	Lower torque threshold 2
P2189[3]	Upper torque threshold 3
P2190[3]	Lower torque threshold 3
P2192[3]	Time delay for belt failure
P2201[3]	Fixed PID setpoint 1
P2202[3]	Fixed PID setpoint 2
P2203[3]	Fixed PID setpoint 3
P2204[3]	Fixed PID setpoint 4
P2205[3]	Fixed PID setpoint 5
P2206[3]	Fixed PID setpoint 6
P2207[3]	Fixed PID setpoint 7
P2208[3]	Fixed PID setpoint 8
P2209[3]	Fixed PID setpoint 9
P2210[3]	Fixed PID setpoint 10
P2211[3]	Fixed PID setpoint 11
P2212[3]	Fixed PID setpoint 12
P2213[3]	Fixed PID setpoint 13
P2214[3]	Fixed PID setpoint 14
P2215[3]	Fixed PID setpoint 15
P2231[3]	Setpoint memory of PID-MOP
P2240[3]	Setpoint of PID-MOP
P2480[3]	Position mode
P2481[3]	Gearbox ratio input
P2482[3]	Gearbox ratio output
P2484[3]	No. of shaft turns = 1 Unit
P2487[3]	Positional error trim value
P2488[3]	Distance / No. of revolutions

2.4 Binector Input Parameters

ParNo	Parameter text
P0731[3]	BI: Function of digital output 1
P0732[3]	BI: Function of digital output 2
P0733[3]	BI: Function of digital output 3
P0800[3]	BI: Download parameter set 0
P0801[3]	BI: Download parameter set 1
P0810	BI: CDS bit 0 (Local / Remote)
P0811	BI: CDS bit 1
P0820	BI: DDS bit 0
P0821	BI: DDS bit 1
P0840[3]	BI: ON/OFF1
P0842[3]	BI: ON reverse/OFF1
P0844[3]	BI: 1. OFF2
P0845[3]	BI: 2. OFF2
P0848[3]	BI: 1. OFF3
P0849[3]	BI: 2. OFF3
P0852[3]	BI: Pulse enable
P1020[3]	BI: Fixed freq. selection Bit 0
P1021[3]	BI: Fixed freq. selection Bit 1
P1022[3]	BI: Fixed freq. selection Bit 2
P1023[3]	BI: Fixed freq. selection Bit 3
P1026[3]	BI: Fixed freq. selection Bit 4
P1028[3]	BI: Fixed freq. selection Bit 5
P1035[3]	BI: Enable MOP (UP-command)
P1036[3]	BI: Enable MOP (DOWN-command)
P1055[3]	BI: Enable JOG right
P1056[3]	BI: Enable JOG left
P1074[3]	BI: Disable additional setpoint
P1110[3]	BI: Inhibit neg. freq. setpoint
P1113[3]	BI: Reverse
P1124[3]	BI: Enable JOG ramp times
P1140[3]	BI: RFG enable
P1141[3]	BI: RFG start
P1142[3]	BI: RFG enable setpoint
P1230[3]	BI: Enable DC braking
P1477[3]	BI: Set integrator of n-ctrl.

ParNo	Parameter text
P1501[3]	BI: Change to torque control
P2103[3]	BI: 1. Faults acknowledgement
P2104[3]	BI: 2. Faults acknowledgement
P2106[3]	BI: External fault
P2200[3]	BI: Enable PID controller
P2220[3]	BI: Fixed PID setp. select Bit 0
P2221[3]	BI: Fixed PID setp. select Bit 1
P2222[3]	BI: Fixed PID setp. select Bit 2
P2223[3]	BI: Fixed PID setp. select Bit 3
P2226[3]	BI: Fixed PID setp. select Bit 4
P2228[3]	BI: Fixed PID setp. select Bit 5
P2235[3]	BI: Enable PID-MOP (UP-cmd)
P2236[3]	BI: Enable PID-MOP (DOWN-cmd)
P2810[2]	BI: AND 1
P2812[2]	BI: AND 2
P2814[2]	BI: AND 3
P2816[2]	BI: OR 1
P2818[2]	BI: OR 2
P2820[2]	BI: OR 3
P2822[2]	BI: XOR 1
P2824[2]	BI: XOR 2
P2826[2]	BI: XOR 3
P2828	BI: NOT 1
P2830	BI: NOT 2
P2832	BI: NOT 3
P2834[4]	BI: D-FF 1
P2837[4]	BI: D-FF 2
P2840[2]	BI: RS-FF 1
P2843[2]	BI: RS-FF 2
P2846[2]	BI: RS-FF 3
P2849	BI: Timer 1
P2854	BI: Timer 2
P2859	BI: Timer 3
P2864	BI: Timer 4

2.5 Connector Input Parameters

ParNo	Parameter text
P0095[10]	CI: Display PZD signals
P0771[2]	CI: DAC
P1070[3]	CI: Main setpoint
P1071[3]	CI: Main setpoint scaling
P1075[3]	CI: Additional setpoint
P1076[3]	CI: Additional setpoint scaling
P1330[3]	CI: Voltage setpoint
P1478[3]	CI: Set integrator value n-ctrl.
P1503[3]	CI: Torque setpoint
P1511[3]	CI: Additional torque setpoint
P1522[3]	CI: Upper torque limit
P1523[3]	CI: Lower torque limit
P2016[8]	CI: PZD to BOP link (USS)
P2019[8]	CI: PZD to COM link (USS)
P2051[8]	CI: PZD to CB

ParNo	Parameter text
P2253[3]	CI: PID setpoint
P2254[3]	CI: PID trim source
P2264[3]	CI: PID feedback
P2869[2]	CI: ADD 1
P2871[2]	CI: ADD 2
P2873[2]	CI: SUB 1
P2875[2]	CI: SUB 2
P2877[2]	CI: MUL 1
P2879[2]	CI: MUL 2
P2881[2]	CI: DIV 1
P2883[2]	CI: DIV 2
P2885[2]	CI: CMP 1
P2887[2]	CI: CMP 2

2.6 Binector Output Parameters

ParNo	Parameter text
r0751	BO: Status word of ADC
r2032	BO: CtrlWrd1 from BOP link (USS)
r2033	BO: CtrlWrd2 from BOP link (USS)
r2036	BO: CtrlWrd1 from COM link (USS)
r2037	BO: CtrlWrd2 from COM link (USS)
r2090	BO: Control word 1 from CB
r2091	BO: Control word 2 from CB
r2811	BO: AND 1
r2813	BO: AND 2
r2815	BO: AND 3
r2817	BO: OR 1
r2819	BO: OR 2
r2821	BO: OR 3
r2823	BO: XOR 1
r2825	BO: XOR 2
r2827	BO: XOR 3
r2829	BO: NOT 1
r2831	BO: NOT 2
r2833	BO: NOT 3
r2835	BO: Q D-FF 1

ParNo	Parameter text
r2836	BO: NOT-Q D-FF 1
r2838	BO: Q D-FF 2
r2839	BO: NOT-Q D-FF 2
r2841	BO: Q RS-FF 1
r2842	BO: NOT-Q RS-FF 1
r2844	BO: Q RS-FF 2
r2845	BO: NOT-Q RS-FF 2
r2847	BO: Q RS-FF 3
r2848	BO: NOT-Q RS-FF 3
r2852	BO: Timer 1
r2853	BO: Nout timer 1
r2857	BO: Timer 2
r2858	BO: Nout timer 2
r2862	BO: Timer 3
r2863	BO: Nout timer 3
r2867	BO: Timer 4
r2868	BO: Nout timer 4
r2886	BO: CMP 1
r2888	BO: CMP 2

2.7 Connector Output Parameters

ParNo	Parameter text
r0020	CO: Freq. setpoint before RFG
r0021	CO: Act. filtered frequency
r0024	CO: Act. filtered output freq.
r0025	CO: Act. filtered output voltage
r0026	CO: Act. filtered DC-link volt.
r0027	CO: Act. filtered output current
r0029	CO: Flux gen. current
r0030	CO: Torque gen. current
r0031	CO: Act. filtered torque
r0032	CO: Act. filtered power
r0035[3]	CO: Act. motor temperature
r0036	CO:Inverter overload utilization
r0037[5]	CO: Inverter temperature [°C]
r0038	CO: Act. power factor
r0039	CO: Energy consumpt. meter [kWh]
r0050	CO: Active command data set
r0051[2]	CO: Active drive data set (DDS)
r0061	CO: Act. encoder frequency
r0062	CO: Freq. setpoint
r0063	CO: Act. frequency
r0064	CO: Dev. frequency controller
r0065	CO: Slip frequency
r0066	CO: Act. output frequency
r0067	CO: Act. output current limit
r0068	CO: Output current
r0069[6]	CO: Act. phase currents
r0070	CO: Act. DC-link voltage
r0071	CO: Max. output voltage
r0072	CO: Act. output voltage
r0074	CO: Act. modulation
r0075	CO: Current setpoint Isd
r0076	CO: Act. current Isd
r0077	CO: Current setpoint Isq
r0078	CO: Act. current Isq
r0079	CO: Torque setpoint (total)
r0080	CO: Act. torque
r0084	CO: Act. air gap flux
r0086	CO: Act. active current
r0090	CO: Act. rotor angle
r0394	CO: Stator resistance IGBT [%]

ParNo	Parameter text
r0395	CO: Total stator resistance [%]
r0396	CO: Act. rotor resistance
r0630[3]	CO: Ambient temperature
r0631[3]	CO: Stator iron temperature
r0632[3]	CO: Stator winding temperature
r0633[3]	CO: Rotor winding temperature
r0755[2]	CO: Act. ADC after scal. [4000h]
r0947[8]	CO: Letzte Fehlermeldung
r0948[12]	CO: Fehlerzeit
r0949[8]	CO: Fehlerwert
r1024	CO: Act. fixed frequency
r1050	CO: Act. Output freq. of the MOP
r1078	CO: Total frequency setpoint
r1079	CO: Selected frequency setpoint
r1114	CO: Freq. setp. after dir. ctrl.
r1119	CO: Freq. setpoint before RFG
r1170	CO: Frequency setpoint after RFG
r1242	CO: Switch-on level of Vdc-max
r1246[3]	CO:Switch-on level kin buffering
r1315	CO: Total boost voltage
r1337	CO: V/f slip frequency
r1343	CO: Imax controller freq. output
r1344	CO: Imax controller volt. output
r1438	CO: Freq. setpoint to controller
r1445	CO: Act. filtered frequency
r1482	CO: Integral output of n-ctrl.
r1490	CO: Droop frequency
r1508	CO: Torque setpoint
r1515	CO: Additional torque setpoint
r1518	CO: Acceleration torque
P1520[3]	CO: Upper torque limit
P1521[3]	CO: Lower torque limit
r1526	CO: Upper torque limitation
r1527	CO: Lower torque limitation
r1536	CO: Max. trq. motoring current
r1537	CO: Max trq regenerative current
r1538	CO: Upper torque limit (total)
r1539	CO: Lower torque limit (total)
P1570[3]	CO: Fixed value flux setpoint
r1583	CO: Flux setpoint (smoothed)

ParNo	Parameter text
r1597	CO: Outp. field weak. controller
r1598	CO: Flux setpoint (total)
r1718	CO: Output of Isq controller
r1719	CO: Integral output of Isq ctrl.
r1723	CO: Output of Isd controller
r1724	CO: Integral output of Isd ctrl.
r1725	CO: Integral limit of Isd ctrl.
r1728	CO: Decoupling voltage
r1770	CO: Prop. output of n-adaption
r1746	CO: Flussabweichung
r1771	CO: Int. output of n-adaption
r1778	CO: Flux angle difference
r1801	CO: Act. pulse frequency
r2015[8]	CO: PZD from BOP link (USS)
r2018[8]	CO: PZD from COM link (USS)

ParNo	Parameter text
r2050[8]	CO: PZD from CB
r2169	CO: Act. filtered frequency
r2224	CO: Act. fixed PID setpoint
r2250	CO: Output setpoint of PID-MOP
r2260	CO: PID setpoint after PID-RFG
r2262	CO: Filtered PID setp. after RFG
r2266	CO: PID filtered feedback
r2272	CO: PID scaled feedback
r2273	CO: PID error
r2294	CO: Act. PID output
r2870	CO: ADD 1
r2872	CO: ADD 2
r2874	CO: SUB 1
r2876	CO: SUB 2
r2878	CO: MUL 1
r2880	CO: MUL 2
r2882	CO: DIV 1
r2884	CO: DIV 2
P2889	CO: Fixed setpoint 1 in [%]
P2890	CO: Fixed setpoint 2 in [%]

2.8 Connector/Binector Output Parameters

ParNo	Parameter text
r0019	CO/BO: BOP control word
r0052	CO/BO: Act. status word 1
r0053	CO/BO: Act. status word 2
r0054	CO/BO: Act. control word 1
r0055	CO/BO: Act. control word 2

ParNo	Parameter text
r0056	CO/BO: Status of motor control
r0403	CO/BO: Encoder status word
r0722	CO/BO: Binary input values
r0747	CO/BO: State of digital outputs
r0785	CO/BO: Zustand Analogausgang
r1407	CO/BO: Status 2 of motor control
r2197	CO/BO: Monitoring word 1
r2198	CO/BO: Monitoring word 2

3 Parameter Description

Note

Level 4 Parameters are not visible with BOP or AOP.

3.1 Common parameters

r0000	**Drive display**			**Min:** -		Level
		Datatype: U16	**Unit:** -	**Def:** -		**1**
	P-Group: ALWAYS			**Max:** -		

Displays the user selected output as defined in P0005.

Note:

Pressing the "Fn" button for 2 seconds allows the user to view the values of DC link voltage, output frequency, output voltage, output current, and chosen r0000 setting (defined in P0005).

r0002	**Drive state**			**Min:** -		Level
		Datatype: U16	**Unit:** -	**Def:** -		**2**
	P-Group: COMMANDS			**Max:** -		

Displays actual drive state.

Possible Settings:

0 Commissioning mode (P0010 != 0)
1 Drive ready
2 Drive fault active
3 Drive starting (DC-link precharging)
4 Drive running
5 Stopping (ramping down)

Dependency:

State 3 visible only while precharging DC link, and when externally powered communications board is fitted.

P0003	**User access level**			**Min:** 0		Level
	CStat: CUT	**Datatype:** U16	**Unit:** -	**Def:** 1		**1**
	P-Group: ALWAYS	**Active:** first confirm	**QuickComm.:** No	**Max:** 4		

Defines user access level to parameter sets. The default setting (standard) is sufficient for most simple applications.

Possible Settings:

0 User defined parameter list - see P0013 for details on use
1 Standard: Allows access into most frequently used parameters.
2 Extended: Allows extended access e.g. to inverter I/O functions.
3 Expert: For expert use only.
4 Service: Only for use by authorized service personal - password protected.

P0004	**Parameter filter**			**Min:** 0		Level
	CStat: CUT	**Datatype:** U16	**Unit:** -	**Def:** 0		**1**
	P-Group: ALWAYS	**Active:** first confirm	**QuickComm.:** No	**Max:** 22		

Filters available parameters according to functionality to enable a more focussed approach to commissioning.

Possible Settings:

0 All parameters
2 Inverter
3 Motor
4 Speed sensor
5 Technol. application / units
7 Commands, binary I/O
8 ADC and DAC
10 Setpoint channel / RFG
12 Drive features
13 Motor control
20 Communication
21 Alarms / warnings / monitoring
22 Technology controller (e.g. PID)

Example:

P0004 = 22 specifies that only PID parameters will be visible.

Dependency:

The parameters are sub-divided into groups (P-Group) according to their functionality. This increases the transparency and allows a parameter to be quickly searched for. Furthermore, parameter P0004 can be used to control the ability to be visualized for the operator panel.

Value	P-Group	Group	Parameter area
0	ALWAYS	All parameters	
2	INVERTER	Drive inverter parameters	0200 0299
3	MOTOR	Motor parameters	0300 ... 0399 + 0600 0699
4	ENCODER	Speed encoder	0400 0499
5	TECH_APL	Technical applications / units	0500 0599
7	COMMANDS	Control commands, digital I/O	0700 .... 0749 + 0800 ... 0899
8	TERMINAL	Analog inputs/outputs	0750 0799
10	SETPOINT	Setpoint channel and ramp-function gen.	1000 1199
12	FUNC	Drive inverter functions	1200 1299
13	CONTROL	Motor open-loop/closed-loop control	1300 1799
20	COMM	Communications	2000 2099
21	ALARMS	Faults, warnings, monitoring functions	2100 2199
22	TECH	Technological controller (PID controller)	2200 2399

Parameters marked "Quick Comm: Yes" in the parameter header can only be set when P0010 = 1 (Quick Commissioning).

P0005[3] Display selection

						Level
CStat:	CUT	**Datatype:** U16	**Unit:** -	**Min:**	2	2
P-Group:	FUNC	**Active:** first confirm	**QuickComm.:** No	**Def:**	21	
				Max:	4000	

Selects display for parameter r0000 (drive display).

Index:

P0005[0] : 1st. Drive data set (DDS)
P0005[1] : 2nd. Drive data set (DDS)
P0005[2] : 3rd. Drive data set (DDS)

Common Settings:

21 Actual frequency
25 Output voltage
26 DC link voltage
27 Output current

Notice:

These settings refer to read only parameter numbers ("rxxxx").

Details:

See relevant "rxxxx" parameter descriptions.

P0006 Display mode

						Level
CStat:	CUT	**Datatype:** U16	**Unit:** -	**Min:**	0	3
P-Group:	FUNC	**Active:** first confirm	**QuickComm.:** No	**Def:**	2	
				Max:	4	

Defines mode of display for r0000 (drive display).

Possible Settings:

0 In Ready state alternate between setpoint and output frequency. In run display output frequency
1 In Ready state display setpoint. In run display output frequency.
2 In Ready state alternate between P0005 value and r0020 value. In run display P0005 value
3 In Ready state alternate between r0002 value and r0020 value. In run display r0002 value
4 In all states just display P0005

Note:

- When inverter is not running, the display alternates between the values for "Not Running" and "Running".
- Per default, the setpoint and actual frequency values are displayed alternately.

P0007 Backlight delay time

						Level
CStat:	CUT	**Datatype:** U16	**Unit:** -	**Min:**	0	3
P-Group:	FUNC	**Active:** first confirm	**QuickComm.:** No	**Def:**	0	
				Max:	2000	

Defines time period after which the backlight display turns off if no operator keys have been pressed.

Value:

P0007 = 0:
Backlight always on (default state).

P0007 = 1 - 2000:
Number of seconds after which the backlight will turn off.

P0010	**Commissioning parameter**			**Min:** 0	Level
	CStat: CT	**Datatype:** U16	**Unit:** -	**Def:** 0	**1**
	P-Group: ALWAYS	**Active:** first confirm	**QuickComm.:** No	**Max:** 30	

Filters parameters so that only those related to a particular functional group are selected.

Possible Settings:

0 Ready
1 Quick commissioning
2 Inverter
29 Download
30 Factory setting

Dependency:

- Reset to 0 for inverter to run.
- P0003 (user access level) also determines access to parameters.

Note:

P0010 = 1
The inverter can be commissioned very quickly and easily by setting P0010 = 1. After that only the important parameters (e.g.: P0304, P0305, etc.) are visible. The value of these parameters must be entered one after the other. The end of quick commissioning and the start of internal calculation will be done by setting P3900 = 1 - 3. Afterward parameter P0010 and P3900 will be reset to zero automatically.

P0010 = 2
For service purposes only.

P0010 = 29
To transfer a parameter file via PC tool (e.g.: DriveMonitor, STARTER) parameter P0010 will be set to 29 by the PC tool. When download has been finished PC tool resets parameter P0010 to zero.

P0010 = 30
When resetting the parameters of inverter P0010 must be set to 30. Resetting of the parameters will be started by setting parameter P0970 = 1. The inverter will automatically reset all its parameters to their default settings. This can prove beneficial if you experience problems during parameter setup and wish to start again. Duration of factory setting will take about 60 s.

P0011	**Lock for user defined parameter**			**Min:** 0	Level
	CStat: CUT	**Datatype:** U16	**Unit:** -	**Def:** 0	**3**
	P-Group: FUNC	**Active:** first confirm	**QuickComm.:** No	**Max:** 65535	

Details:

See parameter P0013 (user defined parameter)

P0012	**Key for user defined parameter**			**Min:** 0	Level
	CStat: CUT	**Datatype:** U16	**Unit:** -	**Def:** 0	**3**
	P-Group: FUNC	**Active:** first confirm	**QuickComm.:** No	**Max:** 65535	

Details:

See parameter P0013 (user defined parameter).

P0013[20]	**User defined parameter**			**Min:** 0	Level
	CStat: CUT	**Datatype:** U16	**Unit:** -	**Def:** 0	**3**
	P-Group: FUNC	**Active:** first confirm	**QuickComm.:** No	**Max:** 65535	

Defines a limited set of parameters to which the end user will have access.

Instructions for use:

1. Set P0003 = 3 (expert user)
2. Go to P0013 indices 0 to 16 (user list)
3. Enter into P0013 index 0 to 16 the parameters required to be visible in the user-defined list. The following values are fixed and cannot be changed:
   - P0013 index 19 = 12 (key for user defined parameter)
   - P0013 index 18 = 10 (commissioning parameter filter)
   - P0013 index 17 = 3 (user access level)
4. Set P0003 = 0 to activate the user defined parameter.

Index:

P0013[0] : 1st user parameter
P0013[1] : 2nd user parameter
P0013[2] : 3rd user parameter
P0013[3] : 4th user parameter
P0013[4] : 5th user parameter
P0013[5] : 6th user parameter
P0013[6] : 7th user parameter
P0013[7] : 8th user parameter
P0013[8] : 9th user parameter
P0013[9] : 10th user parameter
P0013[10] : 11th user parameter
P0013[11] : 12th user parameter
P0013[12] : 13th user parameter
P0013[13] : 14th user parameter
P0013[14] : 15th user parameter
P0013[15] : 16th user parameter
P0013[16] : 17th user parameter
P0013[17] : 18th user parameter
P0013[18] : 19th user parameter
P0013[19] : 20th user parameter

Dependency:

First, set P0011 ("lock") to a different value than P0012 ("key") to prevent changes to user-defined parameter. Then, set P0003 to 0 to activate the user-defined list.

When locked and the user-defined parameter is activated, the only way to exit the user-defined parameter (and view other parameters) is to set P0012 ("key") to the value in P0011 ("lock").

Note:

- Alternatively, set P0010 = 30 (commissioning parameter filter = factory setting) and P0970 = 1 (factory reset) to perform a complete factory reset.
- The default values of P0011 ("lock") and P0012 ("key") are the same.

P0014[3] Store mode

						Level
CStat: UT	**Datatype:** U16	**Unit:** -	**Min:** 0			3
P-Group: -	**Active:** first confirm	**QuickComm.:** No	**Def:** 0	**Max:** 1		

Sets the store mode for parameters ("volatile" (RAM) or "nonvolatile" (EEPROM)).

Possible Settings:

0 Volatile (RAM)
1 Nonvolatile (EEPROM)

Index:

P0014[0] : Serial interface COM link
P0014[1] : Serial interface BOP link
P0014[2] : PROFIBUS / CB

Note:

1. With the BOP the parameter will always be stored in the EEPROM.
2. P0014 itself will always be stored in the EEPROM.
3. P0014 will not be changed by performing a factory reset (P0010 = 30 and P0971 = 1).
4. P0014 can be transferred during a DOWNLOAD (P0010 = 29).
5. If "Store request via USS/CB = volatile (RAM)" and "P0014[x] = volatile (RAM)", you can make a transfer of all parameter values into the nonvolatile memory via P0971.
6. If "Store request via USS/CB" and P0014[x] are not consistent, the setting of P14[x] = "store nonvolatile (EEPROM)" has always higher priority.

Store request via USS/CB	Value of P0014[x]	Result
EEPROM	RAM	EEPROM
EEPROM	EEPROM	EEPROM
RAM	RAM	RAM
RAM	EEPROM	EEPROM

3.2 Diagnosis parameters

r0018	**Firmware version**	**Datatype:** Float **Unit:** -	**Min:** - **Def:** - **Max:** -	Level **1**
	P-Group: INVERTER			

Displays version number of installed firmware.

r0019	**CO/BO: BOP control word**	**Datatype:** U16 **Unit:** -	**Min:** - **Def:** - **Max:** -	Level **3**
	P-Group: COMMANDS			

Displays status of operator panel commands.

The settings below are used as the "source" codes for keypad control when connecting to BICO input parameters.

Bitfields:

Bit00	ON/OFF1	0	NO	1	YES
Bit01	OFF2: Electrical stop	0	YES	1	NO
Bit08	JOG right	0	NO	1	YES
Bit11	Reverse (setpoint inversion)	0	NO	1	YES
Bit13	Motor potentiometer MOP up	0	NO	1	YES
Bit14	Motor potentiometer MOP down	0	NO	1	YES

Note:

When BICO technology is used to allocate functions to panel buttons, this parameter displays the actual status of the relevant command.

The following functions can be "connected" to individual buttons:
- ON/OFF1,
- OFF2,
- JOG,
- REVERSE,
- INCREASE,
- DECREASE

r0020	**CO: Freq. setpoint before RFG**	**Datatype:** Float **Unit:** Hz	**Min:** - **Def:** - **Max:** -	Level **3**
	P-Group: CONTROL			

Displays actual frequency setpoint (input from ramp function generator).

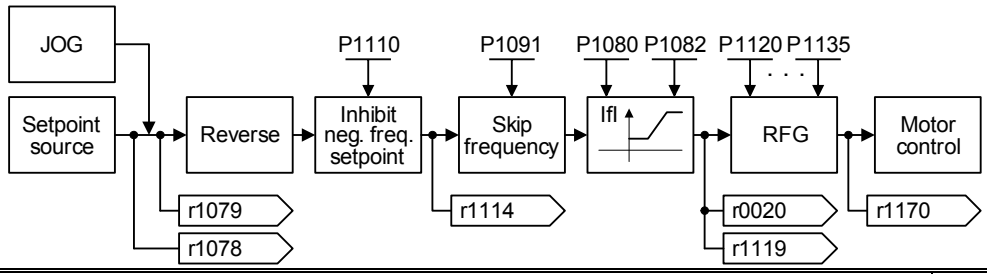

r0021	**CO: Act. filtered frequency 1**	**Datatype:** Float **Unit:** Hz	**Min:** - **Def:** - **Max:** -	Level **2**
	P-Group: CONTROL			

Displays actual inverter output frequency (r0021) excluding slip compensation, resonance damping and frequency limitation.

r0022	**Act. filtered rotor speed**	**Datatype:** Float **Unit:** 1/min	**Min:** - **Def:** - **Max:** -	Level **3**
	P-Group: CONTROL			

Displays calculated rotor speed based on inverter output frequency [Hz] x 120 / number of poles.

$$r0022[1/min] = r0021[Hz] \cdot \frac{60}{r0313}$$

Note:

This calculation makes no allowance for load-dependent slip.

r0024	**CO: Act. filtered output freq.**	**Min:** -	Level
	Datatype: Float **Unit:** Hz	**Def:** -	**3**
	P-Group: CONTROL	**Max:** -	

Displays actual output frequency. Slip compensation, resonance damping and frequency limitation are included.

r0025	**CO: Act. filtered output voltage**	**Min:** -	Level
	Datatype: Float **Unit:** V	**Def:** -	**2**
	P-Group: CONTROL	**Max:** -	

Displays [rms] voltage applied to motor.

r0026	**CO: Act. filtered DC-link volt.**	**Min:** -	Level
	Datatype: Float **Unit:** V	**Def:** -	**2**
	P-Group: INVERTER	**Max:** -	

Displays DC-link voltage.

		Mains		
		200 - 240 V	380 - 480 V	500 - 600 V
$U_{DC\_max\_trip}$	F0002	420 V (FS A - C) 410 V (FS D - F)	840 V (FS A - C) 820 V (FS D - F) 820 V (FS FX, GX)	1020 V
$U_{DC\_min\_trip}$	F0003	215 V	430 V (FS A - F) 380 V (FS FX, GX)	530 V
$U_{DC\_max\_warn}$ $U_{DC\_max\_ctrl}$	A0502 (P1240)	r1242		
$U_{DC\_min\_warn}$ $U_{DC\_min\_ctrl}$	A0503 (P1240)	$\frac{P1245[\%]}{100} \cdot \sqrt{2} \cdot P0210$		
U_{DC_Comp}	(P1236)	$0.98 \cdot r1242$		
$U_{DC\_Chopper}$	(P1237)	$0.98 \cdot r1242$		

r0027	**CO: Act. filtered output current**	**Min:** -	Level
	Datatype: Float **Unit:** A	**Def:** -	**2**
	P-Group: CONTROL	**Max:** -	

Displays [rms] value of motor current [A].

r0029	**CO: Act. filtered current Isd**	**Min:** -	Level
	Datatype: Float **Unit:** A	**Def:** -	**3**
	P-Group: CONTROL	**Max:** -	

Displays flux-generating current component.

The flux-generating current component is based on the nominal flux, which is calculated from the motor parameters (P0340 - Calculation of motor parameters).

Dependency:

Applies when vector control is selected in P1300 (control mode); otherwise, the display shows the value zero.

Note:

The flux-generating current component is generally constant up to the base speed of the motor; above base speed, this component is weakened (field weakening) thus enabling an increase in motor speed but at reduced torque.

r0030	**CO: Act. filtered current Isq**	**Min:** -	Level
	Datatype: Float **Unit:** A	**Def:** -	**3**
	P-Group: CONTROL	**Max:** -	

Displays torque-generating current component.

Note:

For asynchronous motors, a limit is calculated for the torque generating current component (in conjunction with the maximum possible output voltage (r0071), motor leakage and current field weakening (r0377)) and this prevents motor stalling.

r0031	**CO: Act. filtered torque**			**Min:** -	Level
		Datatype: Float	**Unit:** Nm	**Def:** -	**2**
	P-Group: CONTROL			**Max:** -	

Displays electrical torque.

$$m_M = \frac{3}{2} \cdot \frac{L_m}{L_R} \cdot Z_p \cdot \Psi_{rd} \cdot i_{sq}$$

Valid for V/f-caracteristic:

$$i_{sq} \approx \frac{u \cdot |i_s| \cdot \cos\varphi - R_s^2 \cdot |i_s|}{e}$$

m_M: Motor torque
Z_p: Pole pair number
Ψ_{rd}: Rotor flux
L_R: Rotor inductance
L_m: Magnetizing inductance
i_{sq}: Torque-generating current
e: Motor counter EMF

Output value will be zero at low speeds when the current injection is active (r1751.5 = 1).

Note:

The electrical torque is not the same as the mechanical torque, which can be measured on the shaft. Due to windage and friction a part of the electrical torque is lost in the motor.

r0032	**CO: Act. filtered power**			**Min:** -	Level
		Datatype: Float	**Unit:** -	**Def:** -	**2**
	P-Group: CONTROL			**Max:** -	

Displays motor power (power output at the motor shaft).

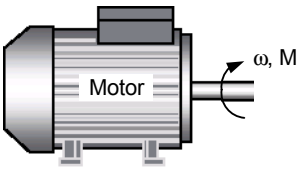

$$P_{mech} = \omega \cdot M = 2 \cdot \pi \cdot f \cdot M$$

$$\Rightarrow$$

$$r0032[kW] = \frac{1}{1000} \cdot 2 \cdot \pi \cdot \frac{r0022}{60} [1/min] \cdot r0031[Nm]$$

$$r0032[hp] = 0.75 \cdot r0032[kW]$$

Dependency:

Value is displayed in [kW] or [hp] depending on setting for P0100 (operation for Europe / North America).

r0035[3]	**CO: Act. motor temperature**			**Min:** -	Level
		Datatype: Float	**Unit:** °C	**Def:** -	**2**
	P-Group: MOTOR			**Max:** -	

Displays measured motor temperature.

Index:

r0035[0] : 1st. Drive data set (DDS)
r0035[1] : 2nd. Drive data set (DDS)
r0035[2] : 3rd. Drive data set (DDS)

r0036	**CO:Inverter overload utilization**	**Min:** -	Level
	Datatype: Float **Unit:** %	**Def:** -	**4**
	P-Group: INVERTER	**Max:** -	

Displays inverter overload utilization calculated via I2t model.

The actual I2t value relative to the max. possible I2t value supplies utilization in [%].

If the current exceeds the threshold for P0294 (inverter I2t overload warning), alarm A0505 (inverter I2t) is generated and the output current of the inverter reduced via P0290 (inverter overload reaction).

If 100 % utilization is exceeded, alarm F0005 (inverter I2t) is tripped.

Example:

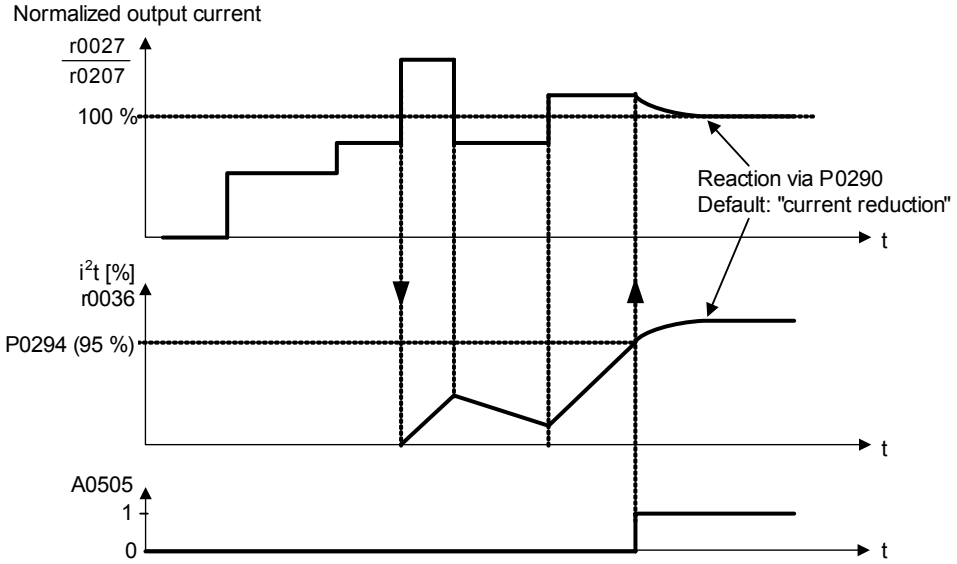

Dependency:

r0036 > 0:
If the nominal current of the inverter is exceed, utilization will be displayed. Otherwise, 0 % utilization is displayed.

r0037[5]	**CO: Inverter temperature [°C]**	**Min:** -	Level
	Datatype: Float **Unit:** °C	**Def:** -	**3**
	P-Group: INVERTER	**Max:** -	

Displays measured heatsink temperature and calculated junction temperature of IGBTs based on thermal model.

Index:

r0037[0] : Measured heat sink temperature
r0037[1] : Chip temperature
r0037[2] : Rectifier temperature
r0037[3] : Inverter ambient temperature
r0037[4] : Control board temperature

r0038	**CO: Act. power factor**	**Min:** -	Level
	Datatype: Float **Unit:** -	**Def:** -	**3**
	P-Group: CONTROL	**Max:** -	

Displays actual power factor.

Dependency:

Applies when V/f control is selected in P1300 (control mode); otherwise, the display shows the value 1.

r0039	**CO: Energy consumpt. meter [kWh]**	**Min:** -	Level
	Datatype: Float **Unit:** kWh	**Def:** -	**2**
	P-Group: INVERTER	**Max:** -	

Displays electrical energy used by inverter since display was last reset (see P0040 - reset energy consumption meter).

$$r0039 = \int_0^{t_{act}} P_W \cdot dt = \int_0^{t_{act}} \sqrt{3} \cdot u \cdot i \cdot \cos\varphi \cdot dt$$

Dependency:

Value is reset when P0040 = 1 (reset energy consumption meter).

P0040	**Reset energy consumption meter**			**Min:** 0	Level
	CStat: CT	**Datatype:** U16	**Unit:** -	**Def:** 0	**2**
	P-Group: INVERTER	**Active:** first confirm	**QuickComm.:** No	**Max:** 1	

Resets value of parameter r0039 (energy consumption meter) to zero.

Possible Settings:

0 No reset
1 Reset r0039 to 0

Dependency:

No reset until "P" is pressed.

r0050	**CO: Active command data set**			**Min:** -	Level
		Datatype: U16	**Unit:** -	**Def:** -	**2**
	P-Group: COMMANDS			**Max:** -	

Displays currently selected and active command data set (CDS).

Possible Settings:

0 1st. Command data set (CDS)
1 2nd. Command data set (CDS)
2 3rd. Command data set (CDS)

Details:

See parameter P0810.

r0051[2]	**CO: Active drive data set (DDS)**			**Min:** -	Level
		Datatype: U16	**Unit:** -	**Def:** -	**2**
	P-Group: COMMANDS			**Max:** -	

Displays currently selected and active drive data set (DDS).

Possible Settings:

0 1st. Drive data set (DDS)
1 2nd. Drive data set (DDS)
2 3rd. Drive data set (DDS)

Index:

r0051[0] : Selected drive data set
r0051[1] : Active drive data set

Details:

See parameter P0820.

r0052	**CO/BO: Act. status word 1**			**Min:** -	Level
		Datatype: U16	**Unit:** -	**Def:** -	**2**
	P-Group: COMMANDS			**Max:** -	

Displays first active status word of inverter (bit format) and can be used to diagnose inverter status.

Bitfields:

Bit00	Drive ready	0	NO	1	YES
Bit01	Drive ready to run	0	NO	1	YES
Bit02	Drive running	0	NO	1	YES
Bit03	Drive fault active	0	NO	1	YES
Bit04	OFF2 active	0	YES	1	NO
Bit05	OFF3 active	0	YES	1	NO
Bit06	ON inhibit active	0	NO	1	YES
Bit07	Drive warning active	0	NO	1	YES
Bit08	Deviation setpoint / act. value	0	YES	1	NO
Bit09	PZD control	0	NO	1	YES
Bit10	Maximum frequency reached	0	NO	1	YES
Bit11	Warning: Motor current limit	0	YES	1	NO
Bit12	Motor holding brake active	0	NO	1	YES
Bit13	Motor overload	0	YES	1	NO
Bit14	Motor runs right	0	NO	1	YES
Bit15	Inverter overload	0	YES	1	NO

Dependency:

r0052 Bit00 - Bit02:
State-sequence diagram after Power On or ON/OFF1 respectively: ==> see below

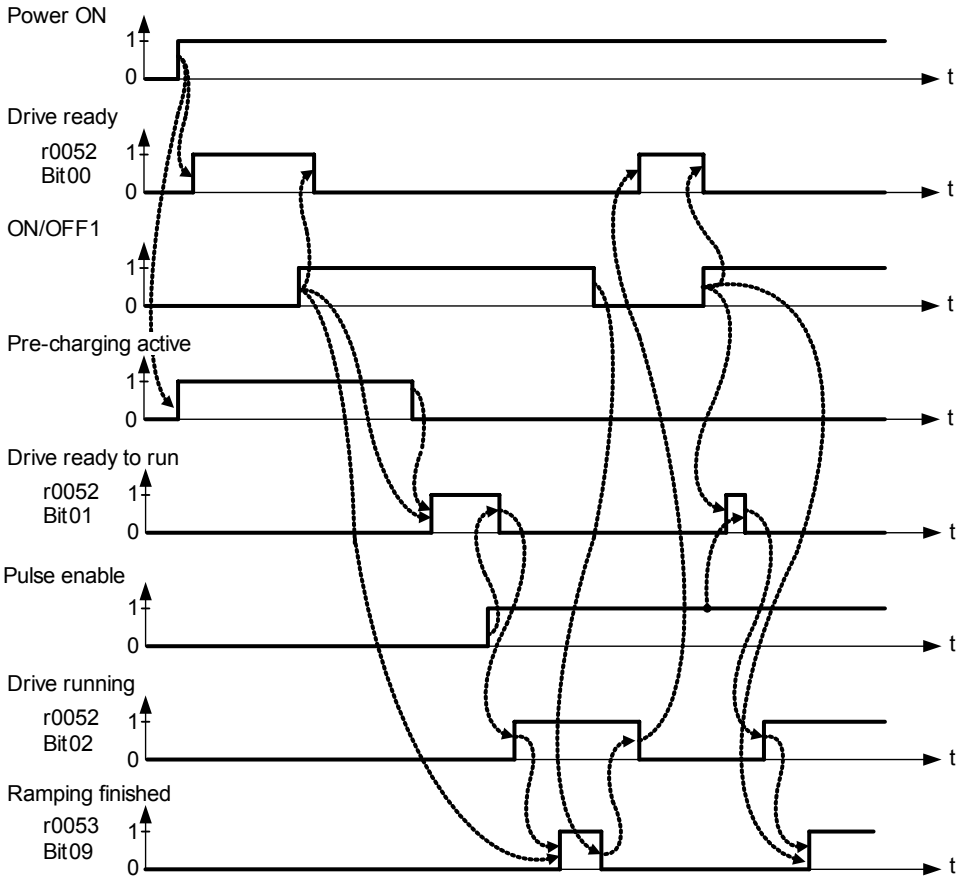

r0052 Bit03 "Drive fault active":
Output of Bit3 (Fault) will be inverted on digital output (Low = Fault, High = No Fault).

r0052 Bit08 "Deviation setpoint / act. value" ==> see parameter P2164

r0052 Bit10 "f_act >= P1082 (f_max)" ==> see parameter P1082

r0052 Bit12 "Motor holding brake active" ==> see parameter P1215

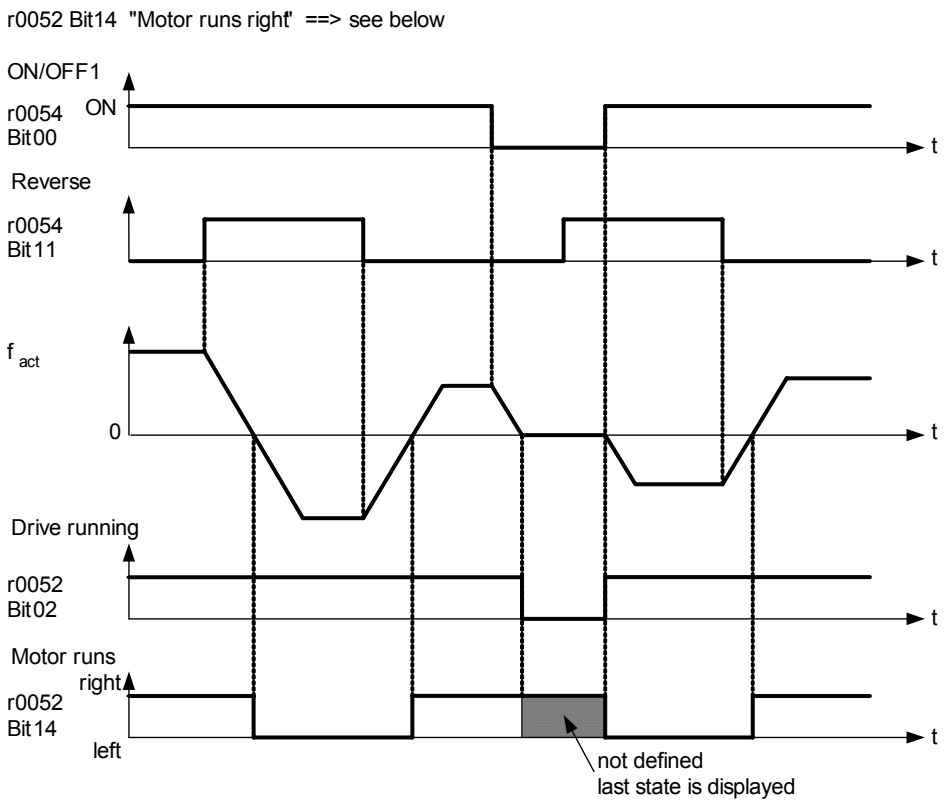

Details:

The 7-segment display of the bit-parameters (binary parameters) is explained in the Introduction of the Parameter List.

r0053	**CO/BO: Act. status word 2**	**Datatype:** U16	**Unit:** -	**Min:** - **Def:** - **Max:** -	Level **2**
	P-Group: COMMANDS				

Displays second status word of inverter (in bit format).

Bitfields:

Bit00	DC brake active	0	NO	1	YES
Bit01	f_act > P2167 (f_off)	0	NO	1	YES
Bit02	f_act <= P1080 (f_min)	0	NO	1	YES
Bit03	Act. current r0027 > P2170	0	NO	1	YES
Bit04	f_act > P2155 (f_1)	0	NO	1	YES
Bit05	f_act <= P2155 (f_1)	0	NO	1	YES
Bit06	f_act >= setpoint	0	NO	1	YES
Bit07	Act. Vdc r0026 < P2172	0	NO	1	YES
Bit08	Act. Vdc r0026 > P2172	0	NO	1	YES
Bit09	Ramping finished	0	NO	1	YES
Bit10	PID output r2294 == P2292 (PID_min)	0	NO	1	YES
Bit11	PID output r2294 == P2291 (PID_max)	0	NO	1	YES
Bit14	Download data set 0 from AOP	0	NO	1	YES
Bit15	Download data set 1 from AOP	0	NO	1	YES

Note:

- r0053 Bit00 ==> see parameter P1233
- r0053 Bit01 ==> see parameter P2167
- r0053 Bit02 ==> see parameter P1080
- r0053 Bit03 ==> see parameter P2170
- r0053 Bit04 ==> see parameter P2155
- r0053 Bit05 ==> see parameter P2155
- r0053 Bit06 ==> see parameter P2150
- r0053 Bit07 ==> see parameter P2172
- r0053 Bit08 ==> see parameter P2172

r0053 Bit09 "Ramping finished" ==> see below

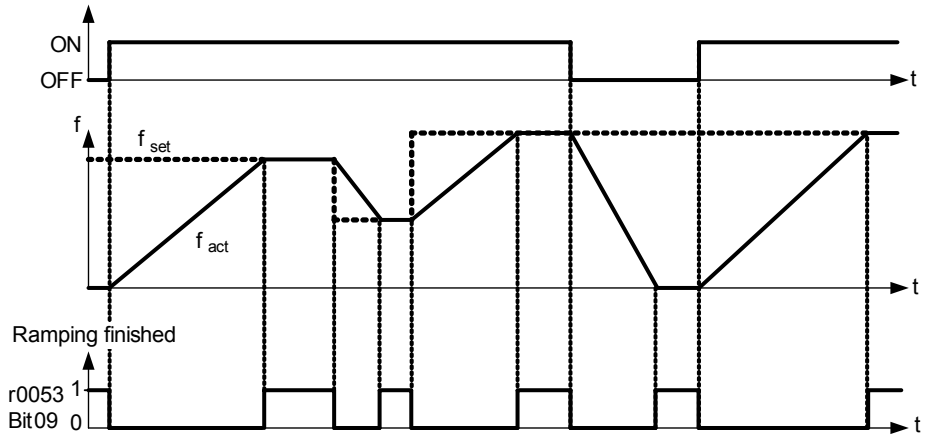

Details:

See description of seven-segment display given in the "Introduction to MICROMASTER System Parameters" in this manual.

r0054	**CO/BO: Act. control word 1**	**Min:** -	Level
	Datatype: U16 **Unit:** -	**Def:** -	**3**
	P-Group: COMMANDS	**Max:** -	

Displays first control word of inverter and can be used to diagnose which commands are active.

Bitfields:

Bit00	ON/OFF1	0	NO	1	YES
Bit01	OFF2: Electrical stop	0	YES	1	NO
Bit02	OFF3: Fast stop	0	YES	1	NO
Bit03	Pulses enabled	0	NO	1	YES
Bit04	RFG enable	0	NO	1	YES
Bit05	RFG start	0	NO	1	YES
Bit06	Setpoint enable	0	NO	1	YES
Bit07	Fault acknowledge	0	NO	1	YES
Bit08	JOG right	0	NO	1	YES
Bit09	JOG left	0	NO	1	YES
Bit10	Control from PLC	0	NO	1	YES
Bit11	Reverse (setpoint inversion)	0	NO	1	YES
Bit13	Motor potentiometer MOP up	0	NO	1	YES
Bit14	Motor potentiometer MOP down	0	NO	1	YES
Bit15	CDS Bit 0 (Local/Remote)	0	NO	1	YES

Details:

See description of seven-segment display given in the "Introduction to MICROMASTER System Parameters" in this manual.

r0055	**CO/BO: Act. control word 2**	**Min:** -	Level
	Datatype: U16 **Unit:** -	**Def:** -	**3**
	P-Group: COMMANDS	**Max:** -	

Displays additional control word of inverter and can be used to diagnose which commands are active.

Bitfields:

Bit00	Fixed frequency Bit 0	0	NO	1	YES
Bit01	Fixed frequency Bit 1	0	NO	1	YES
Bit02	Fixed frequency Bit 2	0	NO	1	YES
Bit03	Fixed frequency Bit 3	0	NO	1	YES
Bit04	Drive data set (DDS) Bit 0	0	NO	1	YES
Bit05	Drive data set (DDS) Bit 1	0	NO	1	YES
Bit08	PID enabled	0	NO	1	YES
Bit09	DC brake enabled	0	NO	1	YES
Bit11	Droop enabled	0	NO	1	YES
Bit12	Torque control	0	NO	1	YES
Bit13	External fault 1	0	YES	1	NO
Bit15	Command data set (CDS) Bit 1	0	NO	1	YES

Details:

See description of seven-segment display given in the "Introduction to MICROMASTER System Parameters" in this handbook.

r0056	**CO/BO: Status of motor control**			**Min:** -	Level
		Datatype: U16	**Unit:** -	**Def:** -	**3**
	P-Group: CONTROL			**Max:** -	

Displays status of motor control (MM420: V/f status), which can be used to diagnose inverter status.

Bitfields:

Bit00	Init. control finished	0	NO	1	YES
Bit01	Motor demagnetizing finished	0	NO	1	YES
Bit02	Pulses enabled	0	NO	1	YES
Bit03	Voltage soft start selected	0	NO	1	YES
Bit04	Motor excitation finished	0	NO	1	YES
Bit05	Starting boost active	0	NO	1	YES
Bit06	Acceleration boost active	0	NO	1	YES
Bit07	Frequency is negative	0	NO	1	YES
Bit08	Field weakening active	0	NO	1	YES
Bit09	Volts setpoint limited	0	NO	1	YES
Bit10	Slip frequency limited	0	NO	1	YES
Bit11	F_out > F_max Freq. limited	0	NO	1	YES
Bit12	Phase reversal selected	0	NO	1	YES
Bit13	I-max controller active	0	NO	1	YES
Bit14	Vdc-max controller active	0	NO	1	YES
Bit15	KIB (Vdc-min control) active	0	NO	1	YES

Details:

See description of seven-segment display given in the introduction.

r0061	**CO: Act. encoder frequency**			**Min:** -	Level
		Datatype: Float	**Unit:** Hz	**Def:** -	**2**
	P-Group: CONTROL			**Max:** -	

Displays actual frequency detected by encoder.

r0062	**CO: Freq. setpoint**			**Min:** -	Level
		Datatype: Float	**Unit:** Hz	**Def:** -	**3**
	P-Group: CONTROL			**Max:** -	

Displays frequency setpoint of vector controller.

r0063	**CO: Act. frequency**			**Min:** -	Level
		Datatype: Float	**Unit:** Hz	**Def:** -	**3**
	P-Group: CONTROL			**Max:** -	

Displays actual unfiltered frequency. This value is not smoothed in contrary to r0021.

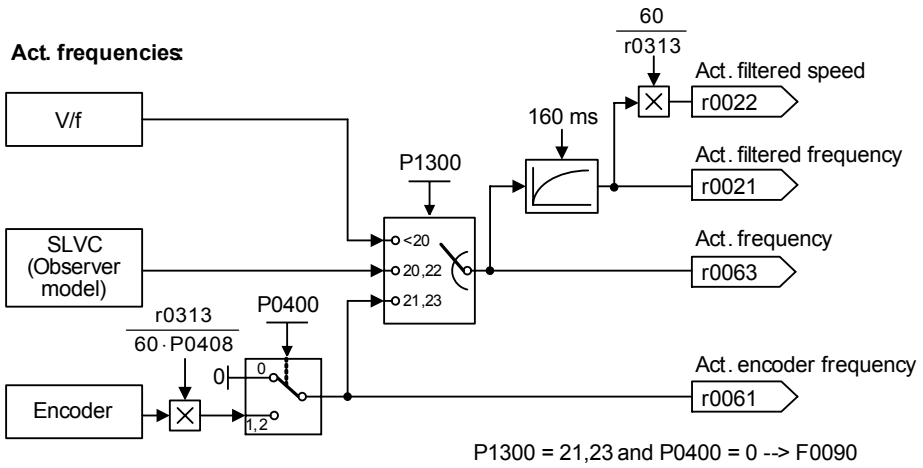

r0064	CO: Dev. frequency controller	Datatype: Float	Unit: Hz	Min: - Def: - Max: -	Level 3
	P-Group: CONTROL				

Displays actual deviation of speed controller.

This value is calculated from the frequency setpoint (r0062) and the actual frequency (r0063).

Dependency:

Applies when vector control is selected in P1300 (control mode); otherwise, the display shows the value zero.

r0065	CO: Slip frequency	Datatype: Float	Unit: %	Min: - Def: - Max: -	Level 3
	P-Group: CONTROL				

Displays slip frequency of motor in [%] relative to the rated motor frequency (P0310).

Details:

For V/f control, see also P1335 (slip compensation).

r0066	CO: Act. output frequency	Datatype: Float	Unit: Hz	Min: - Def: - Max: -	Level 3
	P-Group: CONTROL				

Displays actual output frequency.

Note:

The output frequency is limited by the values entered in P1080 (min. frequency) and P1082 (max. frequency).

r0067	CO: Act. output current limit	Datatype: Float	Unit: A	Min: - Def: - Max: -	Level 3
	P-Group: CONTROL				

Displays valid maximum output current of inverter.

Parameter r0067 is influenced/determined by the following factors:

- Rated motor current P0305
- Motor overload factor P0640
- Motor protection in dependency of P0610
- r0067 is less than or equal to maximum inverter current r0209
- Inverter protection in dependency of P0290

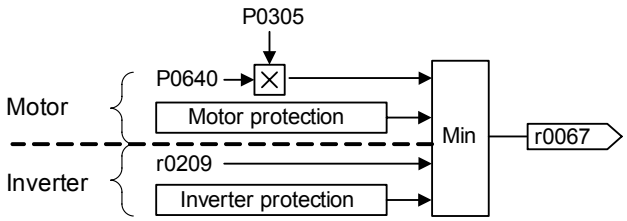

Note:

A reduction of r0067 may indicate an inverter overload or a motor overload.

r0068	CO: Output current	Datatype: Float	Unit: A	Min: - Def: - Max: -	Level 3
	P-Group: CONTROL				

Displays unfiltered [rms] value of motor current [A].

Note:

This is used for the process control (contrary to the smoothed output current r0027, that is used for display).

r0069[6]	CO: Act. phase currents	Datatype: Float	Unit: A	Min: - Def: - Max: -	Level 4
	P-Group: CONTROL				

Displays phase currents.

Index:

r0069[0] : U_phase
r0069[1] : V_phase
r0069[2] : W_phase
r0069[3] : Offset U_phase
r0069[4] : Offset V_phase
r0069[5] : Offset W_phase

r0070	**CO: Act. DC-link voltage**			**Min:** -	Level
		Datatype: Float	**Unit:** V	**Def:** -	**3**
	P-Group: INVERTER			**Max:** -	

Displays (unfiltered) DC-link voltage.

Note:

Used for process control purposes (in contrast to r0026 (actual DC-link voltage), which is filtered and is used to display the value on the BOP/AOP).

r0071	**CO: Max. output voltage**			**Min:** -	Level
		Datatype: Float	**Unit:** V	**Def:** -	**3**
	P-Group: CONTROL			**Max:** -	

Displays maximum output voltage.

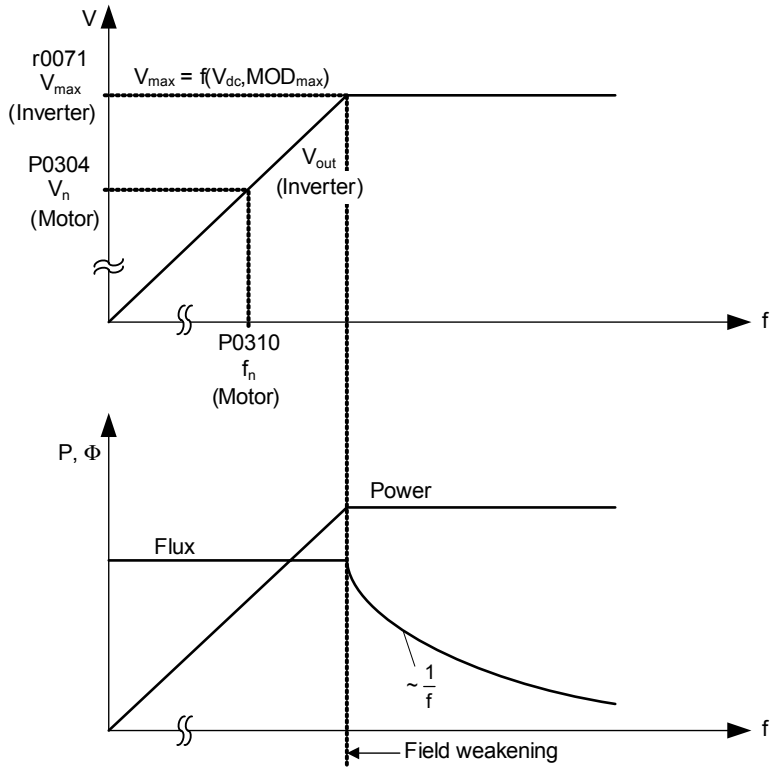

Dependency:

- The actual maximum output voltage depends on the actual incoming line supply voltage.
- The maximum possible output voltage r0071 of the drive inverter is determined by the DC link voltage r0026 and the maximum modulation depth P1803 in the gating unit.
- The maximum output voltage r0071 is tracked with the DC link voltage so that the highest possible value is always and automatically achieved.
- The output voltage only reaches the calculated maximum value under steady-state conditions at the rated load.
- In the no-load and partial load ranges, lower output voltages r0025 are obtained.

r0072	**CO: Act. output voltage**			**Min:** -	Level
		Datatype: Float	**Unit:** V	**Def:** -	**3**
	P-Group: CONTROL			**Max:** -	

Displays output voltage.

r0074	**CO: Act. modulation**			**Min:** -	Level
		Datatype: Float	**Unit:** %	**Def:** -	**4**
	P-Group: CONTROL			**Max:** -	

Displays actual modulation index.

The modulation index is defined as ratio between the magnitude of the fundamental component in the inverter phase output voltage and half of the dc-link voltage.

r0075	**CO: Current setpoint Isd**	**Datatype:** Float	**Unit:** A	**Min:** - **Def:** - **Max:** -	Level **3**
	P-Group: CONTROL				

Displays setpoint of flux generating current component.

Dependency:

Applies when vector control is selected in P1300 (control mode); otherwise, the display shows the value zero.

r0076	**CO: Act. current Isd**	**Datatype:** Float	**Unit:** A	**Min:** - **Def:** - **Max:** -	Level **3**
	P-Group: CONTROL				

Displays flux generating current component.

Dependency:

Applies when vector control is selected in P1300 (control mode); otherwise, the display shows the value zero.

r0077	**CO: Current setpoint Isq**	**Datatype:** Float	**Unit:** A	**Min:** - **Def:** - **Max:** -	Level **3**
	P-Group: CONTROL				

Displays setpoint for component of torque generating current.

Dependency:

Applies when vector control is selected in P1300 (control mode); otherwise, the display shows the value zero.

r0078	**CO: Act. current Isq**	**Datatype:** Float	**Unit:** A	**Min:** - **Def:** - **Max:** -	Level **3**
	P-Group: CONTROL				

Displays component of torque generating current.

r0079	**CO: Torque setpoint (total)**	**Datatype:** Float	**Unit:** Nm	**Min:** - **Def:** - **Max:** -	Level **3**
	P-Group: CONTROL				

Displays total torque setpoint.

Dependency:

Applies when vector control is selected in P1300 (control mode); otherwise, the display shows the value zero.

r0080	**CO: Act. torque**	**Datatype:** Float	**Unit:** Nm	**Min:** - **Def:** - **Max:** -	Level **4**
	P-Group: CONTROL				

Displays actual torque. Output value will be zero at low frequencies when current injection is active (r1751.5 = 1).

r0084	**CO: Act. air gap flux**	**Datatype:** Float	**Unit:** %	**Min:** - **Def:** - **Max:** -	Level **4**
	P-Group: CONTROL				

Displays air gap flux in [%] relative to the rated motor flux.

r0086	**CO: Act. active current**	**Datatype:** Float	**Unit:** A	**Min:** - **Def:** - **Max:** -	Level **3**
	P-Group: CONTROL				

Displays active (real part) of motor current.

Dependency:

Applies when V/f control is selected in P1300 (control mode); otherwise, the display shows the value zero.

r0090	**CO: Act. rotor angle**	**Datatype:** Float	**Unit:** °	**Min:** - **Def:** - **Max:** -	Level **2**
	P-Group: CONTROL				

Indicates the current angle of the rotor. This function is not available on single input channel encoders.

P0095[10]	**CI: Display PZD signals**			**Min:** 0:0	Level
	CStat: CT	**Datatype:** U32	**Unit:** -	**Def:** 0:0	**3**
	P-Group: CONTROL	**Active:** first confirm	**QuickComm.:** No	**Max:** 4000:0	

Selects source of display for PZD signals.

Index:

P0095[0] : 1st PZD signal
P0095[1] : 2nd PZD signal
P0095[2] : 3rd PZD signal
P0095[3] : 4th PZD signal
P0095[4] : 5th PZD signal
P0095[5] : 6th PZD signal
P0095[6] : 7th PZD signal
P0095[7] : 8th PZD signal
P0095[8] : 9th PZD signal
P0095[9] : 10th PZD signal

r0096[10]	**PZD signals**			**Min:** -	Level
		Datatype: Float	**Unit:** %	**Def:** -	**3**
	P-Group: CONTROL			**Max:** -	

Displays PZD signals in [%].

Index:

r0096[0] : 1st PZD signal
r0096[1] : 2nd PZD signal
r0096[2] : 3rd PZD signal
r0096[3] : 4th PZD signal
r0096[4] : 5th PZD signal
r0096[5] : 6th PZD signal
r0096[6] : 7th PZD signal
r0096[7] : 8th PZD signal
r0096[8] : 9th PZD signal
r0096[9] : 10th PZD signal

Note:

r0096 = 100 % corresponds to 4000 hex.

3.3 Inverter parameters (HW)

P0100	**Europe / North America**			**Min:** 0	Level
	CStat: C	**Datatype:** U16	**Unit:** -	**Def:** 0	**1**
	P-Group: QUICK	**Active:** first confirm	**QuickComm.:** Yes	**Max:** 2	

Determines whether power settings (e.g. nominal rating plate power - P0307) are expressed in [kW] or [hp].

The default settings for the nominal rating plate frequency (P0310) and maximum motor frequency (P1082) are also set automatically here, in addition to reference frequency (P2000).

Possible Settings:

0 Europe [kW], frequency default 50 Hz
1 North America [hp], frequency default 60 Hz
2 North America [kW], frequency default 60 Hz

Dependency:

Where:

- Stop drive first (i.e. disable all pulses) before you change this parameter.
- P0100 can only be changed when P0010 = 1 (Commissioning mode) via the respective Commissioing interface (e.g. BOP).
- Changing P0100 resets all rated motor parameters as well as other parameters that depend on the rated motor parameters (see P0340 - calculation of motor parameters).

Changing P0100 overwrites the settings of the DIP50/60 switch (location shown in the diagram below):

1. Parameter P0100 has an higher priority than the DIP50/60 switch.
2. However, after the inverter is powered-on again and P0100 < 2, the DIP50/60 setting will take priority and overwrite P0100.
3. The DIP50/60 switch does not have any effect, if P0100 = 2.

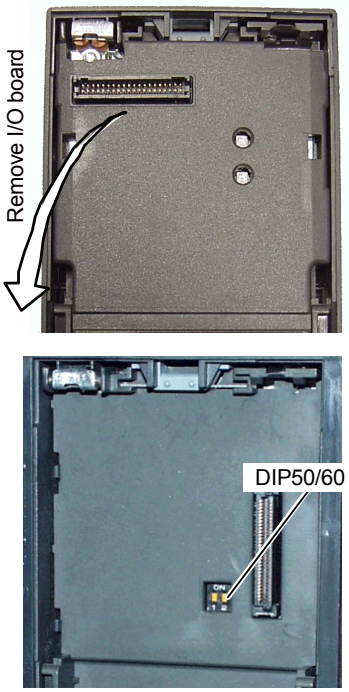

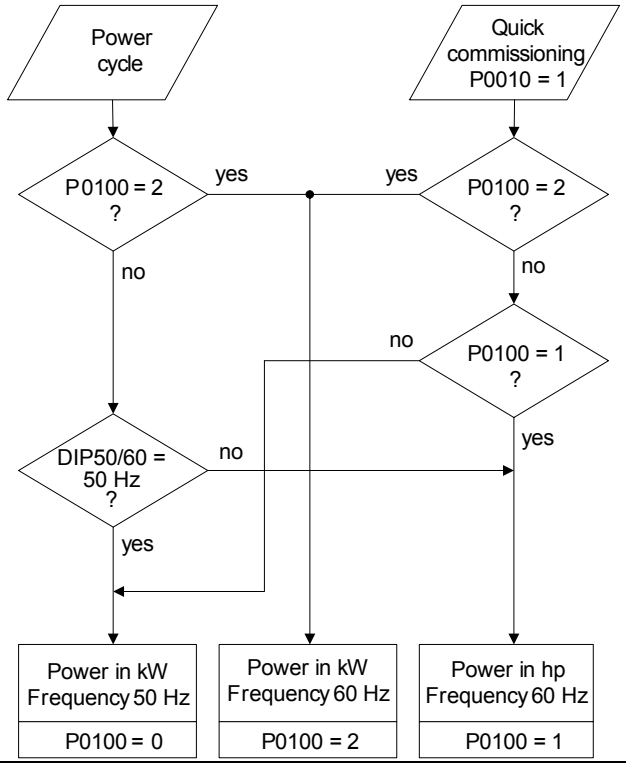

Notice:

P0100 setting 2 (==> [kW], frequency default 60 [Hz]) is not overwritten by the setting of DIP switch 2 (see diagram above).

P0199	**Equipment system number**			**Min:** 0	Level
	CStat: UT	**Datatype:** U16	**Unit:** -	**Def:** 0	**2**
	P-Group: -	**Active:** first confirm	**QuickComm.:** No	**Max:** 255	

Equipment system number This parameter has no operation effect.

r0200	**Act. power stack code number**			**Min:** -	Level
		Datatype: U32	**Unit:** -	**Def:** -	**3**
	P-Group: INVERTER			**Max:** -	

Identifies hardware variant as shown in table below.

Code-No.	MM440 MLFB	Input Voltage & Frequency	CT Power kW	VT Power kW	Internal Filter	Frame Size
41	6SE6440-2UC11-2AAx	1/3AC200-240V +10% -10% 47-63Hz	0,12	0,12	no	A
42	6SE6440-2UC12-5AAx	1/3AC200-240V +10% -10% 47-63Hz	0,25	0,25	no	A
43	6SE6440-2UC13-7AAx	1/3AC200-240V +10% -10% 47-63Hz	0,37	0,37	no	A
44	6SE6440-2UC15-5AAx	1/3AC200-240V +10% -10% 47-63Hz	0,55	0,55	no	A
45	6SE6440-2UC17-5AAx	1/3AC200-240V +10% -10% 47-63Hz	0,75	0,75	no	A
46	6SE6440-2AB11-2AAx	1AC200-240V +10% -10% 47-63Hz	0,12	0,12	Cl. A	A
47	6SE6440-2AB12-5AAx	1AC200-240V +10% -10% 47-63Hz	0,25	0,25	Cl. A	A
48	6SE6440-2AB13-7AAx	1AC200-240V +10% -10% 47-63Hz	0,37	0,37	Cl. A	A
49	6SE6440-2AB15-5AAx	1AC200-240V +10% -10% 47-63Hz	0,55	0,55	Cl. A	A
50	6SE6440-2AB17-5AAx	1AC200-240V +10% -10% 47-63Hz	0,75	0,75	Cl. A	A
51	6SE6440-2UC21-1BAx	1/3AC200-240V +10% -10% 47-63Hz	1,1	1,1	no	B
52	6SE6440-2UC21-5BAx	1/3AC200-240V +10% -10% 47-63Hz	1,5	1,5	no	B
53	6SE6440-2UC22-2BAx	1/3AC200-240V +10% -10% 47-63Hz	2,2	2,2	no	B
54	6SE6440-2AB21-1BAx	1AC200-240V +10% -10% 47-63Hz	1,1	1,1	Cl. A	B
55	6SE6440-2AB21-5BAx	1AC200-240V +10% -10% 47-63Hz	1,5	1,5	Cl. A	B
56	6SE6440-2AB22-2BAx	1AC200-240V +10% -10% 47-63Hz	2,2	2,2	Cl. A	B
57	6SE6440-2UC23-0CAx	1/3AC200-240V +10% -10% 47-63Hz	3	3	no	C
58	6SE6440-2UC24-0CAx	3AC200-240V +10% -10% 47-63Hz	4	5,5	no	C
59	6SE6440-2UC25-5CAx	3AC200-240V +10% -10% 47-63Hz	5,5	7,5	no	C
60	6SE6440-2AB23-0CAx	1AC200-240V +10% -10% 47-63Hz	3	3	Cl. A	C
61	6SE6440-2AC23-0CAx	3AC200-240V +10% -10% 47-63Hz	3	3	Cl. A	C
62	6SE6440-2AC24-0CAx	3AC200-240V +10% -10% 47-63Hz	4	5,5	Cl. A	C
63	6SE6440-2AC25-5CAx	3AC200-240V +10% -10% 47-63Hz	5,5	7,5	Cl. A	C
64	6SE6440-2UC27-5DAx	3AC200-240V +10% -10% 47-63Hz	7,5	11	no	D
65	6SE6440-2UC31-1DAx	3AC200-240V +10% -10% 47-63Hz	11	15	no	D
66	6SE6440-2UC31-5DAx	3AC200-240V +10% -10% 47-63Hz	15	18,5	no	D
67	6SE6440-2AC27-5DAx	3AC200-240V +10% -10% 47-63Hz	7,5	11	Cl. A	D
68	6SE6440-2AC31-1DAx	3AC200-240V +10% -10% 47-63Hz	11	15	Cl. A	D
69	6SE6440-2AC31-5DAx	3AC200-240V +10% -10% 47-63Hz	15	18,5	Cl. A	D
70	6SE6440-2UC31-8EAx	3AC200-240V +10% -10% 47-63Hz	18,5	22	no	E
71	6SE6440-2UC32-2EAx	3AC200-240V +10% -10% 47-63Hz	22	30	no	E
72	6SE6440-2AC31-8EAx	3AC200-240V +10% -10% 47-63Hz	18,5	22	Cl. A	E
73	6SE6440-2AC32-2EAx	3AC200-240V +10% -10% 47-63Hz	22	30	Cl. A	E
74	6SE6440-2UC33-0FAx	3AC200-240V +10% -10% 47-63Hz	30	37	no	F
75	6SE6440-2UC33-7FAx	3AC200-240V +10% -10% 47-63Hz	37	45	no	F
76	6SE6440-2UC34-5FAx	3AC200-240V +10% -10% 47-63Hz	45	45	no	F
77	6SE6440-2AC33-0FAx	3AC200-240V +10% -10% 47-63Hz	30	37	Cl. A	F
78	6SE6440-2AC33-7FAx	3AC200-240V +10% -10% 47-63Hz	37	45	Cl. A	F
79	6SE6440-2AC34-5FAx	3AC200-240V +10% -10% 47-63Hz	45	45	Cl. A	F
80	6SE6440-2UD13-7AAx	3AC380-480V +10% -10% 47-63Hz	0,37	0,37	no	A
81	6SE6440-2UD15-5AAx	3AC380-480V +10% -10% 47-63Hz	0,55	0,55	no	A
82	6SE6440-2UD17-5AAx	3AC380-480V +10% -10% 47-63Hz	0,75	0,75	no	A
83	6SE6440-2UD21-1AAx	3AC380-480V +10% -10% 47-63Hz	1,1	1,1	no	A
84	6SE6440-2UD21-5AAx	3AC380-480V +10% -10% 47-63Hz	1,5	1,5	no	A
85	6SE6440-2UD22-2BAx	3AC380-480V +10% -10% 47-63Hz	2,2	2,2	no	B
86	6SE6440-2UD23-0BAx	3AC380-480V +10% -10% 47-63Hz	3	3	no	B
87	6SE6440-2UD24-0BAx	3AC380-480V +10% -10% 47-63Hz	4	4	no	B
88	6SE6440-2AD22-2BAx	3AC380-480V +10% -10% 47-63Hz	2,2	2,2	Cl. A	B
89	6SE6440-2AD23-0BAx	3AC380-480V +10% -10% 47-63Hz	3	3	Cl. A	B
90	6SE6440-2AD24-0BAx	3AC380-480V +10% -10% 47-63Hz	4	4	Cl. A	B
91	6SE6440-2UD25-5CAx	3AC380-480V +10% -10% 47-63Hz	5,5	7,5	no	C
92	6SE6440-2UD27-5CAx	3AC380-480V +10% -10% 47-63Hz	7,5	11	no	C
93	6SE6440-2UD31-1CAx	3AC380-480V +10% -10% 47-63Hz	11	15	no	C

Code-No.	MM440 MLFB	Input Voltage & Frequency	CT Power kW	VT Power kW	Internal Filter	Frame Size
94	6SE6440-2AD25-5CAx	3AC380-480V +10% -10% 47-63Hz	5,5	7,5	Cl. A	C
95	6SE6440-2AD27-5CAx	3AC380-480V +10% -10% 47-63Hz	7,5	11	Cl. A	C
96	6SE6440-2AD31-1CAx	3AC380-480V +10% -10% 47-63Hz	11	15	Cl. A	C
97	6SE6440-2UD31-5DAx	3AC380-480V +10% -10% 47-63Hz	15	18,5	no	D
98	6SE6440-2UD31-8DAx	3AC380-480V +10% -10% 47-63Hz	18,5	22	no	D
99	6SE6440-2UD32-2DAx	3AC380-480V +10% -10% 47-63Hz	22	30	no	D
100	6SE6440-2AD31-5DAx	3AC380-480V +10% -10% 47-63Hz	15	18,5	Cl. A	D
101	6SE6440-2AD31-8DAx	3AC380-480V +10% -10% 47-63Hz	18,5	22	Cl. A	D
102	6SE6440-2AD32-2DAx	3AC380-480V +10% -10% 47-63Hz	22	30	Cl. A	D
103	6SE6440-2UD33-0EAx	3AC380-480V +10% -10% 47-63Hz	30	37	no	E
104	6SE6440-2UD33-7EAx	3AC380-480V +10% -10% 47-63Hz	37	45	no	E
105	6SE6440-2AD33-0EAx	3AC380-480V +10% -10% 47-63Hz	30	37	Cl. A	E
106	6SE6440-2AD33-7EAx	3AC380-480V +10% -10% 47-63Hz	37	45	Cl. A	E
107	6SE6440-2UD34-5FAx	3AC380-480V +10% -10% 47-63Hz	45	55	no	F
108	6SE6440-2UD35-5FAx	3AC380-480V +10% -10% 47-63Hz	55	75	no	F
109	6SE6440-2UD37-5FAx	3AC380-480V +10% -10% 47-63Hz	75	90	no	F
110	6SE6440-2AD34-5FAx	3AC380-480V +10% -10% 47-63Hz	45	55	Cl. A	F
111	6SE6440-2AD35-5FAx	3AC380-480V +10% -10% 47-63Hz	55	75	Cl. A	F
112	6SE6440-2AD37-5FAx	3AC380-480V +10% -10% 47-63Hz	75	90	Cl. A	F
113	6SE6440-2UE17-5CAx	3AC500-600V +10% -10% 47-63Hz	0,75	1,5	no	C
114	6SE6440-2UE21-5CAx	3AC500-600V +10% -10% 47-63Hz	1,5	2,2	no	C
115	6SE6440-2UE22-2CAx	3AC500-600V +10% -10% 47-63Hz	2,2	4	no	C
116	6SE6440-2UE24-0CAx	3AC500-600V +10% -10% 47-63Hz	4	5,5	no	C
117	6SE6440-2UE25-5CAx	3AC500-600V +10% -10% 47-63Hz	5,5	7,5	no	C
118	6SE6440-2UE27-5CAx	3AC500-600V +10% -10% 47-63Hz	7,5	11	no	C
119	6SE6440-2UE31-1CAx	3AC500-600V +10% -10% 47-63Hz	11	15	no	C
120	6SE6440-2UE31-5DAx	3AC500-600V +10% -10% 47-63Hz	15	18,5	no	D
121	6SE6440-2UE31-8DAx	3AC500-600V +10% -10% 47-63Hz	18,5	22	no	D
122	6SE6440-2UE32-2DAx	3AC500-600V +10% -10% 47-63Hz	22	30	no	D
123	6SE6440-2UE33-0EAx	3AC500-600V +10% -10% 47-63Hz	30	37	no	E
124	6SE6440-2UE33-7EAx	3AC500-600V +10% -10% 47-63Hz	37	45	no	E
125	6SE6440-2UE34-5FAx	3AC500-600V +10% -10% 47-63Hz	45	55	no	F
126	6SE6440-2UE35-5FAx	3AC500-600V +10% -10% 47-63Hz	55	75	no	F
127	6SE6440-2UE37-5FAx	3AC500-600V +10% -10% 47-63Hz	75	90	no	F
1001	6SE6440-2UD38-8FAx	3AC400-480V +10% -10% 47-63Hz	90	110	no	FX
1002	6SE6440-2UD41-1FAx	3AC400-480V +10% -10% 47-63Hz	110	132	no	FX
1003	6SE6440-2UD41-3GAx	3AC400-480V +10% -10% 47-63Hz	132	160	no	GX
1004	6SE6440-2UD41-6GAx	3AC400-480V +10% -10% 47-63Hz	160	200	no	GX
1005	6SE6440-2UD42-0GAx	3AC400-480V +10% -10% 47-63Hz	200	250	no	GX

Notice:

Parameter r0200 = 0 indicates that no power stack has been identified.

P0201 Power stack code number

CStat: C	**Datatype:** U16	**Unit:** -	**Min:** 0	Level	
P-Group: INVERTER	**Active:** first confirm	**QuickComm.:** No	**Def:** 0	**3**	
			Max: 65535		

Confirms actual power stack identified.

r0203 Act. inverter type

	Datatype: U16	**Unit:** -	**Min:** -	Level
P-Group: INVERTER			**Def:** -	**3**
			Max: -	

Type number of actual inverter identified.

Possible Settings:

1 MICROMASTER 420
2 MICROMASTER 440
3 MICRO- / COMBIMASTER 411
4 MICROMASTER 410
5 Reserved
6 MICROMASTER 440 PX
7 MICROMASTER 430

r0204	**Power stack features**			**Min:** -	Level
		Datatype: U32	**Unit:** -	**Def:** -	**3**
	P-Group: INVERTER			**Max:** -	

Displays hardware features of power stack.

Bitfields:

```
Bit00   DC input voltage                    0  NO        1  YES
Bit01   RFI filter                          0  NO        1  YES
```

Note:

Parameter r0204 = 0 indicates that no power stack has been identified.

P0205	**Inverter application**			**Min:** 0	Level
	CStat: C	**Datatype:** U16	**Unit:** -	**Def:** 0	**3**
	P-Group: INVERTER	**Active:** first confirm	**QuickComm.:** Yes	**Max:** 1	

Selects inverter application.

The inverter and motor requirements are determined by the speed range and torque requirements of the load. The relationship between speed and torque for different loads (constant torque loads or variable torque loads).

Possible Settings:

0 Constant torque
1 Variable torque

Note:

Constant torque (CT):
CT is used if the application needs a constant torque on the whole frequency range. Many loads can be considered to be constant torque loads. Typical constant torque loads are conveyors, compressors and positve displacement pumps (see diagram).

Variable torque (VT):
VT is used if the application has a parabolic frequency-torque characteristic like many fans and pumps.

Variable torque allows with the same inverter:
- Higher rated inverter current r0207
- Higher rated inverter power r0206
- Higher threshold for I2t protection

If P0205 is modified in quick commissioning it immediately calculates various motor parameters:
- P0305 Rated motor current
- P0307 Rated motor power
- P0640 Motor overload factor

Torque	$M \sim \frac{1}{f}$	M = const.	$M \sim f$	$M \sim f^2$
Power	P = const.	$P \sim f$	$P \sim f^2$	$P \sim f^3$
Characteristic	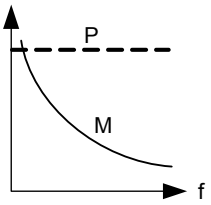	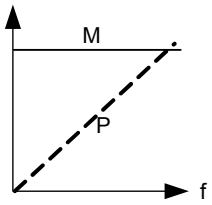	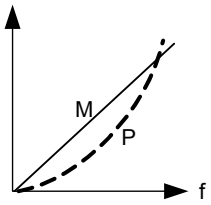	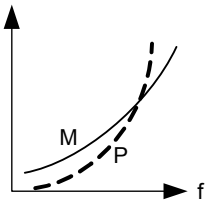
Application	Winders Facing lathes Rotary cutting machines	Hoisting gear Belt conveyors Process machines Involving forming Rolling mills Planers Compressors	Calenders with viscous friction Eddy-current brakes	Pumps Fans Centrifuges

It is recommended to modify P0205 first. Afterwards motor parameter may be adapted. Motor parameter will be overridden by changing this sequence.

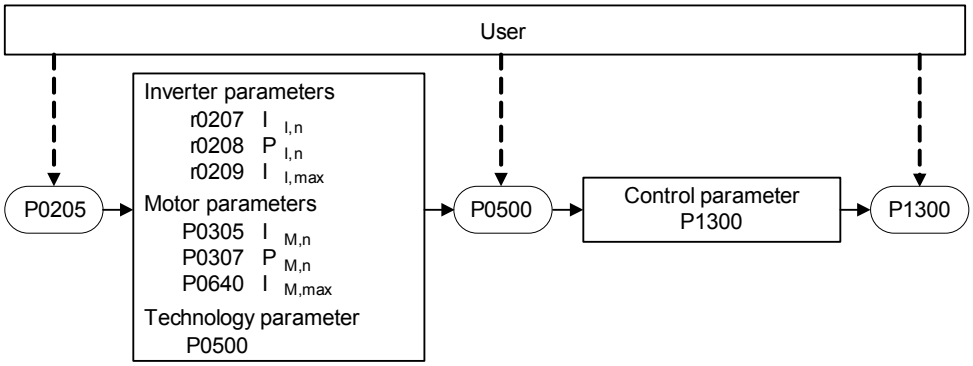

Notice:

- The parameter value is not reset by the factory setting (see P0970).
- To set P0205 = 1 (variable torque) is not possible for all inverters.
- Use setting 1 (variable torque) only for variable-torque applications (e.g. pumps and fans). If used for constant-load applications, I2t warning will be produced too late, causing overheating in the motor.

r0206	**Rated inverter power [kW] / [hp]**	**Min:** -	Level
	Datatype: Float **Unit:** -	**Def:** -	**2**
	P-Group: INVERTER	**Max:** -	

Displays nominal rated motor power from inverter.

Dependency:

Value is displayed in [kW] or [hp] depending on setting for P0100 (operation for Europe / North America).

$$r0206[hp] = 0.75 \cdot r0206[kW]$$

r0207[3]	**Rated inverter current**	**Min:** -	Level
	Datatype: Float **Unit:** A	**Def:** -	**2**
	P-Group: INVERTER	**Max:** -	

Indicates the rated inverter current.

Index:

r0207[0] : Rated inverter current
r0207[1] : Rated VT current
r0207[2] : Rated CT current

Note:

VT (variable torque) and CT (constant torque) specify the overload capability (CT/VT application) of the inverter. The definition of the rated as well as the overload and base load values depend on the inverter type and inverter power. The different values can be taken from the appropriate Catalog or are saved in the drive inverter (refer to Fig.).

The VT rated current r0207[1] or CT rated current r0207[2] represent the matching 4-pole Siemens IEC standard motor for the selected load duty cycle (refer to the diagram). Parameters r0207[1] or r0207[2] are used as default values for P0305 as a function of the CT/VT application (load duty cycle). If r0207[1] = r0207[2], then it is not possible to make a differentiation between a CT/VT application.

Overload in operation is only possible if, before the overload condition, the load current was less than the rated current. For drives, which must be able to handle overload conditions, it is first necessary to define a base load current for the required load.

If the full overload capability is used, then this is detected using an I²t monitoring and the power module is protected as a function of parameter P0290.

r0208	**Rated inverter voltage**	**Min:** -	Level
	Datatype: U32 **Unit:** V	**Def:** -	**2**
	P-Group: INVERTER	**Max:** -	

Displays nominal AC supply voltage of inverter.

Value:

r0208 = 230 : 200 - 240 V +/- 10 %
r0208 = 400 : 380 - 480 V +/- 10 %
r0208 = 575 : 500 - 600 V +/- 10 %

r0209	**Maximum inverter current**			**Min:** -	Level
		Datatype: Float	**Unit:** A	**Def:** -	**2**
	P-Group: INVERTER			**Max:** -	

Displays maximum output current of inverter.

Dependency:

Parameter r0209 depends on the derating which is affected by pulse frequency P1800, ambient temperature and altitude. The data of deration is given in the OPERATING INSRTRUCTION.

P0210	**Supply voltage**			**Min:** 0	Level
	CStat: CT	**Datatype:** U16	**Unit:** V	**Def:** 230	**3**
	P-Group: INVERTER	**Active:** Immediately	**QuickComm.:** No	**Max:** 1000	

Parameter P0210 defines the supply voltage.

Its default value depends upon the type of inverter. If P0210 does not correspond to the supply voltage, then it must be modified.

When P0210 has been modified, the following thresholds are changed:

Dependency:

Optimizes Vdc controller, which extends the ramp-down time if regenerative energy from motor would otherwise cause DC link overvoltage trips.

Reducing the value enables controller to cut in earlier and reduce the risk of overvoltage.

Set P1254 ("Auto detect Vdc switch-on levels") = 0. Cut-in levels for Vdc-controller and compound braking are then derived directly from P0210 (supply voltage).

Vdc_min switch-on level	$= P1245 \cdot \sqrt{2} \cdot P0210$
Vdc_max switch-on level	$= 1.15 \cdot \sqrt{2} \cdot P0210$
Compound braking switch-on level	$= 1.13 \cdot \sqrt{2} \cdot P0210$
Dynamic braking switch-on level	$= 1.13 \cdot \sqrt{2} \cdot P0210$

Note:

- If mains voltage is higher than value entered, automatic deactivation of the Vdc controller may occur to avoid acceleration of the motor. An alarm will be issued in this case (A0910).
- Default value is depending on inverter type and its rating data.

r0231[2]	**Max. cable length**			**Min:** -	Level
		Datatype: U16	**Unit:** m	**Def:** -	**3**
	P-Group: INVERTER			**Max:** -	

Indexed parameter to display maximum allowable cable length between inverter and motor.

Index:

r0231[0] : Max. allowed unscreened cable length
r0231[1] : Max. allowed screened cable length

Notice:

For full EMC compliance, the screened cable must not exceed 25 m in length when an EMC filter is fitted.

P0290	**Inverter overload reaction**			**Min:** 0	Level
	CStat: CT	**Datatype:** U16	**Unit:** -	**Def:** 2	**3**
	P-Group: INVERTER	**Active:** first confirm	**QuickComm.:** No	**Max:** 3	

Selects reaction of inverter to an internal over-temperature.

Following physical values influence the inverter overload protection (see diagram):

- heat sink temperature
- junction temperature (IGBT temperature)
- inverter I²t

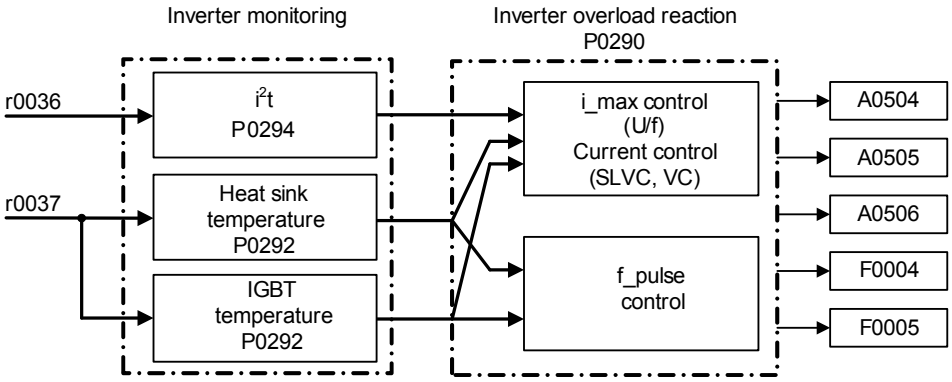

Possible Settings:

0 Reduce output frequency
1 Trip (F0004)
2 Reduce pulse frequency and output frequency
3 Reduce pulse frequency then trip (F0004)

Notice:

P0290 = 0:
Reduction of output frequency is only effective if the load is also reduced. This is for example valid for variable torque applications with a quadratic torque characteristic as pumps or fans.

A trip will always result, if the action taken does not sufficiently reduce internal temperature.

The pulse frequency P1800 is reduced only if higher than 2 kHz. The actual pulse frequency is displayed in parameter r1801.

P0291[3]	**Inverter protection**			**Min:** 0	Level
	CStat: CT	**Datatype:** U16	**Unit:** -	**Def:** 1	**4**
	P-Group: INVERTER	**Active:** Immediately	**QuickComm.:** No	**Max:** 7	

Bit 02 shows if phase loss dedection (input phase) of 3 phase inverters is enabled after factory reset. Default setting of phase loss is disabled for FSA - FSC. FSD and greater it is enabled.

Bitfields:

```
Bit00   Reserved                          0  NO        1  YES
Bit01   Reserved                          0  NO        1  YES
Bit02   Phase loss detection enable       0  NO        1  YES
```

Index:

P0291[0] : 1st. Drive data set (DDS)
P0291[1] : 2nd. Drive data set (DDS)
P0291[2] : 3rd. Drive data set (DDS)

Details:

See P0290 (inverter overload reaction)

P0292	**Inverter temperature warning**			**Min:** 0	Level
	CStat: CUT	**Datatype:** U16	**Unit:** °C	**Def:** 5	**3**
	P-Group: INVERTER	**Active:** first confirm	**QuickComm.:** No	**Max:** 25	

Defines the temperature difference (in ºC) between the Overtemperature trip threshold and the warning threshold of the inverter. The trip threshold is stored internally by the inverter and cannot be changed by the user.

Temperature warning threshold of inverter T_warn

$T_{warn} = T_{trip} - P0292$

Temperature shutdown threshold of inverter T_trip

Temperature	**MM440, Frame Size**							
	A - C	**D - F**	**F**	**FX**		**GX**		
			600 V	**95 kW CT**	**110 kW CT**	**132 kW CT**	**160 kW CT**	**200 kW CT**
Heat sink	110 °C	95 °C	80 °C	88 °C	91 °C	80 °C	82 °C	88 °C
IGBT	140 °C	145 °C	145 °C	150 °C	150 °C	145 °C	147 °C	150 °C
Input rectifier	-	-	-	75 °C	75 °C	75 °C	75 °C	75 °C
Cooling air	-	-	-	55 °C	55 °C	55 °C	55 °C	50 °C
Control board	-	-	-	65 °C	65 °C	65 °C	65 °C	65 °C

If the actual inverter temperature (r0037) exceeds the corresponding threshold, a warning A0504, if the temperature still increases then a fault F0004 will be displayed.

P0294	**Inverter I2t overload warning**			**Min:** 10.0	Level
	CStat: CUT	**Datatype:** Float	**Unit:** %	**Def:** 95.0	**4**
	P-Group: INVERTER	**Active:** first confirm	**QuickComm.:** No	**Max:** 100.0	

Defines the [%] value at which alarm A0505 (inverter I2t) is generated.

Inverter I2t calculation is used to determine a maximum tolerable period for inverter overload. The I2t calculation value is deemed = 100 % when this maximum tolerable period is reached.

Dependency:

That the output current of the inverter has been reduced and that the value of I2t does not exceed 100%.

Note:

P0294 = 100 % corresponds to stationary nominal load.

P0295	**Inverter fan off delay time**			**Min:** 0	Level
	CStat: CUT	**Datatype:** U16	**Unit:** s	**Def:** 0	**3**
	P-Group: TERMINAL	**Active:** first confirm	**QuickComm.:** No	**Max:** 3600	

Defines inverter fan switch off delay time in seconds after drive has stopped.

Note:

Setting to 0, inverter fan will switch off when the drive stops, that is no delay.

3.4 Motor parameters

P0300[3]	**Select motor type**			**Min:** 1	Level
	CStat: C	**Datatype:** U16	**Unit:** -	**Def:** 1	**2**
	P-Group: MOTOR	**Active:** first confirm	**QuickComm.:** Yes	**Max:** 2	

Selects motor type.

This parameter is required during commissioning to select motor type and optimize inverter performance. Most motors are asynchronous; if in doubt, use the formula below.

$$x = P0310 \cdot \frac{60}{P0311}$$

x = 1, 2, ..., n : Synchronous motor

$x \neq 1, 2, ..., n$: Asynchronous motor

If the result is a whole number, the motor is synchronous.

Possible Settings:

1 Asynchronous rotational motor
2 Synchronous rotational motor

Index:

P0300[0] : 1st. Drive data set (DDS)
P0300[1] : 2nd. Drive data set (DDS)
P0300[2] : 3rd. Drive data set (DDS)

Dependency:

Changeable only when P0010 = 1 (quick commissioning).

If synchronous motor is selected, the following functions are not available:

- P0308 Power factor
- P0309 Motor efficiency
- P0346 Magnetization time
- P0347 Demagnetization time
- P1335 Slip compensation
- P1336 Slip limit
- P0320 Motor magnetizing current
- P0330 Rated motor slip
- P0331 Rated magnetization current
- P0332 Rated power factor
- P0384 Rotor time constant
- P1200, P1202, P1203 Flying start
- P1230, P1232, P1233 DC braking

P0304[3]	**Rated motor voltage**			**Min:** 10	Level
	CStat: C	**Datatype:** U16	**Unit:** V	**Def:** 230	**1**
	P-Group: MOTOR	**Active:** first confirm	**QuickComm.:** Yes	**Max:** 2000	

Nominal motor voltage [V] from rating plate. Following diagram shows a typical rating plate with the locations of the relevant motor data.

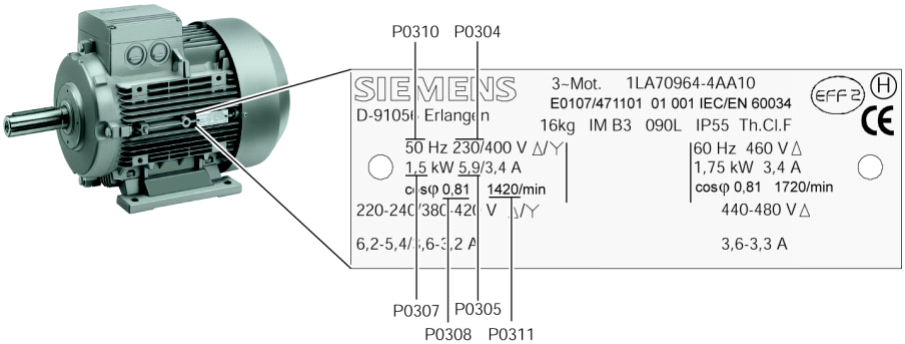

Line supply voltage	1 AC 110 V *)	1 AC 230 V	3 AC 230 V	3 AC 400 V	3 AC 500 V
MICROMASTER 410	X	X	-	-	-
MICROMASTER 411	-	-	-	X	-
MICROMASTER 420	-	X	X	X	-
MICROMASTER 430	-	-	-	X	-
MICROMASTER 440	-	X	X	X	X

*) Line supply voltage 1-ph. 110 V AC is stepped-up --> frequency inverter output voltage 3-ph. 230 V AC

Index:

P0304[0] : 1st. Drive data set (DDS)
P0304[1] : 2nd. Drive data set (DDS)
P0304[2] : 3rd. Drive data set (DDS)

Dependency:

- Changeable only when P0010 = 1 (quick commissioning).
- Default value is depending on inverter type and its rating data.

Caution:

The input of rating plate data must correspond with the wiring of the motor (star / delta). This means, if delta wiring is used for the motor, delta rating plate data has to be entered.

IEC Motor

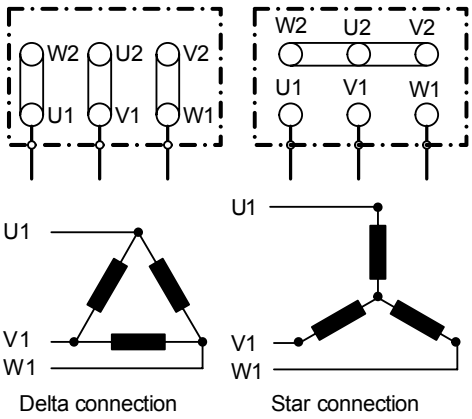

e.g.: Volts 230 V (Delta connection) / 400 V (Star connection)

NEMA Motor

Volts	U	V	W	Connected together			Connection
low	T_1-T_7	T_2-T_8	T_3-T_9	T_4-T_5-T_6			Y Y
high	T_1	T_2	T_3	T_1-T_7	T_2-T_8	T_3-T_9	Y

e.g.: Volts 230 V YY (low) / 460 V Y (high)

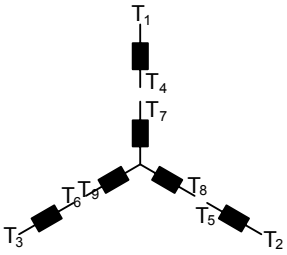

Volts	U	V	W	Connected together			Connection
low	T_1-T_6-T_7	T_2-T_4-T_8	T_3-T_5-T_9	-			Δ Δ
high	T_1	T_2	T_3	T_4-T_7	T_5-T_8	T_6-T_9	Δ

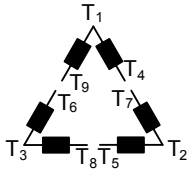

P0305[3] Rated motor current

CStat:	C	**Datatype:** Float	**Unit:** A	**Min:**	0.01
P-Group:	MOTOR	**Active:** first confirm	**QuickComm.:** Yes	**Def:**	3.25
				Max:	10000.00

Level **1**

Nominal motor current [A] from rating plate - see diagram in P0304.

Index:

P0305[0] : 1st. Drive data set (DDS)
P0305[1] : 2nd. Drive data set (DDS)
P0305[2] : 3rd. Drive data set (DDS)

Dependency:

- Changeable only when P0010 = 1 (quick commissioning).
- Default value is depending on inverter type and its rating data.

- Depends also on P0320 (motor magnetization current).

Note:

The maximum value of P0305 depends on the maximum inverter current r0209 and the motor type:

Asynchronous motor : $P0305_{max,asyn} = r0209$

Synchronous motor : $P0305_{max,syn} = 2 \cdot r0209$

It is recommanded that the ratio of P0305 (rated motor current) and r0207 (rated inverter current) should not be lower than:

U/f : $\frac{1}{8} \leq \frac{P0305}{r0207}$

SLVC and VC : $\frac{1}{4} \leq \frac{P0305}{r0207}$

P0307[3] Rated motor power

CStat:	C	**Datatype:** Float	**Unit:** -	**Min:**	0.01
P-Group:	MOTOR	**Active:** first confirm	**QuickComm.:** Yes	**Def:**	0.12
				Max:	2000.00

Level **1**

Nominal motor power [kW/hp] from rating plate.

Index:

P0307[0] : 1st. Drive data set (DDS)
P0307[1] : 2nd. Drive data set (DDS)
P0307[2] : 3rd. Drive data set (DDS)

Dependency:

- If P0100 = 1, values will be in [hp] - see diagram P0304 (rating plate).
- Changeable only when P0010 = 1 (quick commissioning).
- Default value is depending on inverter type and its rating data.

P0308[3]	**Rated motor cosPhi**			**Min:** 0.000	Level
	CStat: C	**Datatype:** Float	**Unit:** -	**Def:** 0.000	**1**
	P-Group: MOTOR	**Active:** first confirm	**QuickComm.:** Yes	**Max:** 1.000	

Nominal motor power factor (cosPhi) from rating plate - see diagram P0304.

Index:

P0308[0] : 1st. Drive data set (DDS)
P0308[1] : 2nd. Drive data set (DDS)
P0308[2] : 3rd. Drive data set (DDS)

Dependency:

- Changeable only when P0010 = 1 (quick commissioning).
- Visible only when P0100 = 0 or 2, (motor power entered in [kW]).
- Default value is depending on inverter type and its rating data.

- Setting 0 causes internal calculation of value. Calculated value see r0332.

P0309[3]	**Rated motor efficiency**			**Min:** 0.0	Level
	CStat: C	**Datatype:** Float	**Unit:** %	**Def:** 0.0	**1**
	P-Group: MOTOR	**Active:** first confirm	**QuickComm.:** Yes	**Max:** 99.9	

Nominal motor efficiency in [%] from rating plate.

Index:

P0309[0] : 1st. Drive data set (DDS)
P0309[1] : 2nd. Drive data set (DDS)
P0309[2] : 3rd. Drive data set (DDS)

Dependency:

- Changeable only when P0010 = 1 (quick commissioning).
- Visible only when P0100 = 1, (i.e. motor power entered in [hp]).
- Default value is depending on inverter type and its rating data.

- Setting 0 causes internal calculation of value. Calculated value see r0332.

Note:

P0309 = 100 % corresponds to superconducting.

Details:

See diagram in P0304 (rating plate).

P0310[3]	**Rated motor frequency**			**Min:** 12.00	Level
	CStat: C	**Datatype:** Float	**Unit:** Hz	**Def:** 50.00	**1**
	P-Group: MOTOR	**Active:** first confirm	**QuickComm.:** Yes	**Max:** 650.00	

Nominal motor frequency [Hz] from rating plate.

Index:

P0310[0] : 1st. Drive data set (DDS)
P0310[1] : 2nd. Drive data set (DDS)
P0310[2] : 3rd. Drive data set (DDS)

Dependency:

- Changeable only when P0010 = 1 (quick commissioning).
- Pole pair number recalculated automatically if parameter is changed.

Details:

See diagram in P0304 (rating plate)

P0311[3]	**Rated motor speed**			**Min:** 0	Level
	CStat: C	**Datatype:** U16	**Unit:** 1/min	**Def:** 0	**1**
	P-Group: MOTOR	**Active:** first confirm	**QuickComm.:** Yes	**Max:** 40000	

Nominal motor speed [rpm] from rating plate.

Index:

P0311[0] : 1st. Drive data set (DDS)
P0311[1] : 2nd. Drive data set (DDS)
P0311[2] : 3rd. Drive data set (DDS)

Dependency:

- Changeable only when P0010 = 1 (quick commissioning).
- Setting 0 causes internal calculation of value.
- Slip compensation in V/f control requires rated motor speed for correct operation.
- Pole pair number recalculated automatically if parameter is changed.
- Default value is depending on inverter type and its rating data.

- Required for vector control and V/f control with speed controller.

Details:

See diagram in P0304 (rating plate)

r0313[3]	**Motor pole pairs**			**Min:** -	Level
		Datatype: U16	**Unit:** -	**Def:** -	**3**
	P-Group: MOTOR			**Max:** -	

Displays number of motor pole pairs that the inverter is currently using for internal calculations.

Index:

r0313[0] : 1st. Drive data set (DDS)
r0313[1] : 2nd. Drive data set (DDS)
r0313[2] : 3rd. Drive data set (DDS)

Value:

r0313 = 1 : 2-pole motor
r0313 = 2 : 4-pole motor
etc.

Dependency:

Recalculated automatically when P0310 (rated motor frequency) or P0311 (rated motor speed) is changed.

$$r0313 = 60 \cdot \frac{P0310}{P0311}$$

P0314[3]	**Motor pole pair number**			**Min:** 0	Level
	CStat: C	**Datatype:** U16	**Unit:** -	**Def:** 0	**3**
	P-Group: MOTOR	**Active:** first confirm	**QuickComm.:** Yes	**Max:** 99	

Specifies number of pole pairs of motor.

Index:

P0314[0] : 1st. Drive data set (DDS)
P0314[1] : 2nd. Drive data set (DDS)
P0314[2] : 3rd. Drive data set (DDS)

Value:

P0314 = 1 : 2-pole motor
P0314 = 2 : 4-pole motor
etc.

Dependency:

Recalculated automatically when P0310 (rated motor frequency) or P0311 (rated motor speed) is changed.

P0320[3]	**Motor magnetizing current**			**Min:** 0.0	Level
	CStat: CT	**Datatype:** Float	**Unit:** %	**Def:** 0.0	**3**
	P-Group: MOTOR	**Active:** Immediately	**QuickComm.:** Yes	**Max:** 99.0	

Defines motor magnetization current in [%] relative to P0305 (rated motor current).

Index:

P0320[0] : 1st. Drive data set (DDS)
P0320[1] : 2nd. Drive data set (DDS)
P0320[2] : 3rd. Drive data set (DDS)

Dependency:

Setting P0320 = 0: causes calculation by
- P0340 = 1 (data entered from rating plate) or by
- P3900 = 1 - 3 (end of quick commissioning). The calculated value is displayed in parameter r0331.

r0330[3]	**Rated motor slip**			**Min:** -	Level
		Datatype: Float	**Unit:** %	**Def:** -	**3**
	P-Group: MOTOR			**Max:** -	

Displays nominal motor slip in [%] relative to P0310 (rated motor frequency) and P0311 (rated motor speed).

$$r0330[\%] = \frac{P0310 - \frac{P0311}{60} \cdot r0313}{P0310} \cdot 100\%$$

Index:

r0330[0] : 1st. Drive data set (DDS)
r0330[1] : 2nd. Drive data set (DDS)
r0330[2] : 3rd. Drive data set (DDS)

r0331[3]	**Rated magnetization current**			**Min:** -	Level
		Datatype: Float	**Unit:** A	**Def:** -	**3**
	P-Group: MOTOR			**Max:** -	

Displays calculated magnetizing current of motor in [A].

Index:

r0331[0] : 1st. Drive data set (DDS)
r0331[1] : 2nd. Drive data set (DDS)
r0331[2] : 3rd. Drive data set (DDS)

r0332[3]	**Rated power factor**			**Min:** -	Level
		Datatype: Float	**Unit:** -	**Def:** -	**3**
	P-Group: MOTOR			**Max:** -	

Displays power factor for motor

Index:

r0332[0] : 1st. Drive data set (DDS)
r0332[1] : 2nd. Drive data set (DDS)
r0332[2] : 3rd. Drive data set (DDS)

Dependency:

Value is calculated internally if P0308 (rated motor cosPhi) set to 0; otherwise, value entered in P0308 is displayed.

r0333[3]	**Rated motor torque**			**Min:** -	Level
		Datatype: Float	**Unit:** Nm	**Def:** -	**3**
	P-Group: MOTOR			**Max:** -	

Displays rated motor torque.

Index:

r0333[0] : 1st. Drive data set (DDS)
r0333[1] : 2nd. Drive data set (DDS)
r0333[2] : 3rd. Drive data set (DDS)

Dependency:

Value is calculated from P0307 (rated motor power) and P0311 (rated motor speed).

$$r0333[Nm] = \frac{P0307[kW] \cdot 1000}{\frac{P0311[1/min]}{60} \cdot 2\pi}$$

P0335[3]	**Motor cooling**			**Min:** 0	Level
	CStat: CT	**Datatype:** U16	**Unit:** -	**Def:** 0	**2**
	P-Group: MOTOR	**Active:** first confirm	**QuickComm.:** Yes	**Max:** 3	

Selects motor cooling system used.

Possible Settings:

0 Self-cooled: Using shaft mounted fan attached to motor
1 Force-cooled: Using separately powered cooling fan
2 Self-cooled and internal fan
3 Force-cooled and internal fan

Index:

P0335[0] : 1st. Drive data set (DDS)
P0335[1] : 2nd. Drive data set (DDS)
P0335[2] : 3rd. Drive data set (DDS)

Caution:

The following combination of parameter setting should not be combined:

- P0610 = 1 and P0335 = 0 or 2 :
  When P0335 = 0 or 2 the inverter cools the motor using a shaft mounted fan. If this is used in conjunction with P0610 the cooling of the motor will be inefficient.

In essence, if the i2t calculation reduces the output frequency, then the shaft mounted fan will also reduce its cooling effect, the motor will then eventually overheat and trip.

- Exception:
  Applications with variable torque the reduction of max. current leeds automatically to a reduction of the load / output current.

Notice:

Motors of series 1LA1 and 1LA8 have an internal fan. This internal motor fan must not be confused with the fan at the end of the motor shaft.

P0340[3]	**Calculation of motor parameters**			**Min:** 0	Level
	CStat: CT	**Datatype:** U16	**Unit:** -	**Def:** 0	**2**
	P-Group: MOTOR	**Active:** first confirm	**QuickComm.:** No	**Max:** 4	

Calculates various motor parameters (see table below). This parameter is required during commissioning to optimize inverter performance.

Possible Settings:

0 No calculation
1 Complete parameterization
2 Calculation of equivalent circuit data
3 Calculation of V/f and vector control data
4 Calculation of controller settings only

Index:

P0340[0] : 1st. Drive data set (DDS)
P0340[1] : 2nd. Drive data set (DDS)
P0340[2] : 3rd. Drive data set (DDS)

Note:

P0340 = 0:
No calculation

P0340 = 1:
The motor weight/moment of inertia (P0344, P0341) are determined starting from the rating plate parameters (P0300 - P0335), the motor equivalent circuit diagram parameters (ESB, P0350 - P0369). The V/f control/vector control parameters and reference quantities are then pre-assigned (includes all of the calculations from P0340 = 2,3,4).

P0340 = 2:
The motor equivalent circuit diagram parameters (ESB, P0350 - P0369) are calculated starting from the rating plate parameters (without any other pre-assignments made).

P0340 = 3:
The V/f control/vector control parameters are determined (includes all calculations from P0340 = 4) starting from the motor equivalent circuit diagram parameters (ESB, P0350 - P0369) and motor weight/moment of inertia, moment of inertia ratio (P0344, P0341, P0342).

P0340 = 4:
The vector control parameters are pre-assigned starting from the motor equivalent circuit diagram parameters (ESB, P0350 - P0369) and motor weight/moment of inertia, moment of inertia ratio (P0344, P0341, P0342).

	P0340 = 1	P0340 = 2	P0340 = 3	P0340 = 4
P0341[3] Motor inertia [kg*m^2]	x			
P0342[3] Total/motor inertia ratio	x			
P0344[3] Motor weight	x			
P0346[3] Magnetization time	x		x	
P0347[3] Demagnetization time	x		x	
P0350[3] Stator resistance (line-to-line)	x	x		
P0352[3] Cable resistance	x	x		
P0354[3] Rotor resistance	x	x		
P0356[3] Stator leakage inductance	x	x		
P0358[3] Rotor leakage inductance	x	x		
P0360[3] Main inductance	x	x		
P0362[3] Magnetizing curve flux 1	x	x		
P0363[3] Magnetizing curve flux 2	x	x		
P0364[3] Magnetizing curve flux 3	x	x		
P0365[3] Magnetizing curve flux 4	x	x		
P0366[3] Magnetizing curve imag 1	x	x		
P0367[3] Magnetizing curve imag 2	x	x		
P0368[3] Magnetizing curve imag 3	x	x		
P0369[3] Magnetizing curve imag 4	x	x		
P0625[3] Ambient motor temperature	x	x		
P1253[3] Vdc-controller output limitation	x		x	
P1316[3] Boost end frequency	x		x	
P1460[3] Gain speed controller	x		x	x
P1462[3] Integral time speed controller	x		x	x
P1470[3] Gain speed controller (SLVC)	x		x	x
P1472[3] Integral time n-ctrl. (SLVC)	x		x	x
P1520[3] CO: Upper torque limit	x			
P1521[3] CO: Lower torque limit	x			
P1530[3] Motoring power limitation	x			
P1531[3] Regenerative power limitation	x			
P1715[3] Gain current controller	x		x	x
P1717[3] Integral time current controller	x		x	x
P1764[3] Kp of n-adaption (SLVC)	x		x	x
P1767[3] Tn of n-adaption (SLVC)	x		x	x
P2000[3] Reference frequency	x			
P2002[3] Reference current	x			
P2003[3] Reference torque	x			
P2174[3] Torque threshold M_thresh	x			
P2185[3] Upper torque threshold 1	x			
P2186[3] Lower torque threshold 1	x			
P2187[3] Upper torque threshold 2	x			
P2188[3] Lower torque threshold 2	x			
P2189[3] Upper torque threshold 3	x			
P2190[3] Lower torque threshold 3	x			

P0341[3]	**Motor inertia [kg*m^2]**			**Min:** 0.00010	Level
	CStat: CUT	**Datatype:** Float	**Unit:** -	**Def:** 0.00180	**3**
	P-Group: MOTOR	**Active:** Immediately	**QuickComm.:** No	**Max:** 1000.00000	

Sets no-load inertia of motor.

Together with P0342 (inertia ratio total/motor) and P1496 (scaling factor acceleration), this value produces the acceleration torque (r1517), which can be added to any additional torque produced from a BICO source (P1511), and incorporated in the torque control function.

Index:

P0341[0] : 1st. Drive data set (DDS)
P0341[1] : 2nd. Drive data set (DDS)
P0341[2] : 3rd. Drive data set (DDS)

Note:

The result of P0341 * P0342 is included in the speed controller calculation. P0341 * P0342 (inertia ratio total/motor) = total motor inertia

P1496 (scaling factor acceleration) = 100 % activates acceleration pre-control for the speed controller and calculates the torque from P0341 (motor inertia) and P0342 (inertia ratio total/motor).

P0342[3]	**Total/motor inertia ratio**			**Min:** 1.000	Level
	CStat: CUT	**Datatype:** Float	**Unit:** -	**Def:** 1.000	**3**
	P-Group: MOTOR	**Active:** Immediately	**QuickComm.:** No	**Max:** 400.000	

Specifies ratio between total inertia (load + motor) and motor inertia.

Index:

P0342[0] : 1st. Drive data set (DDS)
P0342[1] : 2nd. Drive data set (DDS)
P0342[2] : 3rd. Drive data set (DDS)

P0344[3]	**Motor weight**			**Min:** 1.0	Level
	CStat: CUT	**Datatype:** Float	**Unit:** kg	**Def:** 9.4	**3**
	P-Group: MOTOR	**Active:** Immediately	**QuickComm.:** No	**Max:** 6500.0	

Specifies motor weight [kg].

Index:

P0344[0] : 1st. Drive data set (DDS)
P0344[1] : 2nd. Drive data set (DDS)
P0344[2] : 3rd. Drive data set (DDS)

Note:

- This value is used in the motor thermal model.
- It is normally calculated automatically from P0340 (motor parameters) but can also be entered manually.
- Default value is depending on inverter type and its rating data.

r0345[3]	**Motor start-up time**			**Min:** -	Level
		Datatype: Float	**Unit:** s	**Def:** -	**3**
	P-Group: MOTOR			**Max:** -	

Displays motor start-up time. This time corresponds to the standardized motor inertia.

The start-up time is the time taken to reach rated motor speed from standstill at acceleration with rated motor torque (r0333).

Index:

r0345[0] : 1st. Drive data set (DDS)
r0345[1] : 2nd. Drive data set (DDS)
r0345[2] : 3rd. Drive data set (DDS)

P0346[3]	**Magnetization time**			**Min:** 0.000	Level
	CStat: CUT	**Datatype:** Float	**Unit:** s	**Def:** 1.000	**3**
	P-Group: MOTOR	**Active:** Immediately	**QuickComm.:** No	**Max:** 20.000	

Sets magnetization time [s], i.e. waiting time between pulse enable and start of ramp-up. Motor magnetization builds up during this time.

Magnetization time is normally calculated automatically from the motor data and corresponds to the rotor time constant (r0384).

Index:

P0346[0] : 1st. Drive data set (DDS)
P0346[1] : 2nd. Drive data set (DDS)
P0346[2] : 3rd. Drive data set (DDS)

Note:

- If boost settings are higher than 100 %, magnetization time may be reduced.
- Default value is depending on inverter type and its rating data.
- An excessive reduction of this time can result in insufficient motor magnetization.

P0347[3]	**Demagnetization time**			**Min:** 0.000	Level
	CStat: CUT	**Datatype:** Float	**Unit:** s	**Def:** 1.000	**3**
	P-Group: MOTOR	**Active:** Immediately	**QuickComm.:** No	**Max:** 20.000	

Defines the de-magnetization time for the connected induction motor.

The de-magnetization time is the time that must expire between powering-down the drive (OFF2 or a drive inverter fault/error) and powering-up again. The drive inverter is prevented from being powered-up again within this time interval. The flux in the induction motor is reduced to a low value during this de-magnetization time.

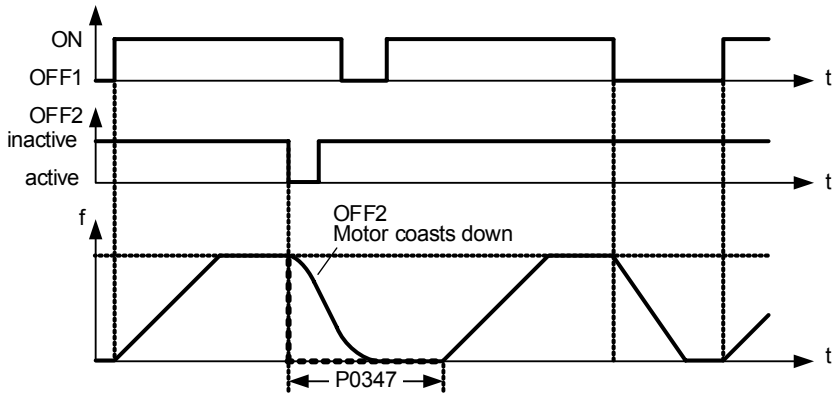

Index:

P0347[0] : 1st. Drive data set (DDS)
P0347[1] : 2nd. Drive data set (DDS)
P0347[2] : 3rd. Drive data set (DDS)

Note:

- The de-magnetization time is approximately 250% of the rotor time constant (r0384) in seconds.
- The pre-assignment (default value) depends on the drive inverter type and its rated/nominal values.
- It is not active after a normal ramp-down - i.e. after OFF1 or OFF3.
- If this time is excessively shortened, then the drive inverter will be tripped (shut down) due to an overcurrent condition.
- If a synchronous motor is connected, the de-magnetization time should be set to 0.

P0350[3]	**Stator resistance (line-to-line)**			**Min:** 0.00001	Level
	CStat: CUT	**Datatype:** Float	**Unit:** Ohm	**Def:** 4.00000	**2**
	P-Group: MOTOR	**Active:** Immediately	**QuickComm.:** No	**Max:** 2000.00000	

Stator resistance value in [Ohms] for connected motor (from line-to-line). The parameter value includes the cable resistance.

$$P0350 = 2 \cdot (R_{Cable} + R_S)$$

There are three ways to determine the value for this parameter:

1. Calculate using
   - P0340 = 1 (data entered from rating plate) or
   - P0010 = 1, P3900 = 1,2 or 3 (end of quick commissioning).
2. Measure using P1910 = 1 (motor data identification - value for stator resistance is overwritten).
3. Measure manually using an Ohmmeter.

Index:

P0350[0] : 1st. Drive data set (DDS)
P0350[1] : 2nd. Drive data set (DDS)
P0350[2] : 3rd. Drive data set (DDS)

Note:

- Since measured line-to-line, this value may appear to be higher (up to 2 times higher) than expected.
- The value entered in P0350 (stator resistance) is the one obtained by the method last used.
- Default value is depending on inverter type and its rating data.

P0352[3]	**Cable resistance**			**Min:** 0.0	Level
	CStat: CUT	**Datatype:** Float	**Unit:** Ohm	**Def:** 0.0	**3**
	P-Group: MOTOR	**Active:** Immediately	**QuickComm.:** No	**Max:** 120.0	

Describes cable resistance between inverter and motor for one phase.

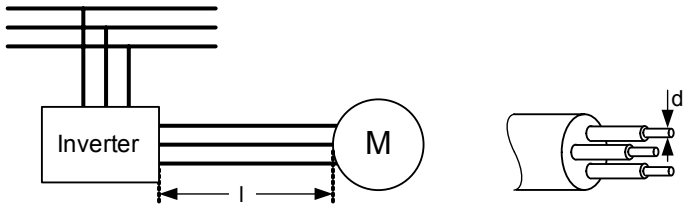

l : Cable length d : Cable diameter

$R = \rho \cdot \frac{l}{A}$ A : Cable cross-section $A = \pi \cdot \left(\frac{d}{2}\right)^2$

ρ : Specific resistance $\rho_{Cu} = 0{,}0178 \frac{\Omega \cdot mm^2}{m}$

Index:

P0352[0] : 1st. Drive data set (DDS)
P0352[1] : 2nd. Drive data set (DDS)
P0352[2] : 3rd. Drive data set (DDS)

P0354[3]	**Rotor resistance**			**Min:** 0.0	Level
	CStat: CUT	**Datatype:** Float	**Unit:** Ohm	**Def:** 10.0	**4**
	P-Group: MOTOR	**Active:** Immediately	**QuickComm.:** No	**Max:** 300.0	

Sets rotor resistance of motor equivalent circuit (phase value).

Index:

P0354[0] : 1st. Drive data set (DDS)
P0354[1] : 2nd. Drive data set (DDS)
P0354[2] : 3rd. Drive data set (DDS)

Dependency:

Calculated automatically using the motor model or determined using P1910 (motor identification).

P0356[3]	**Stator leakage inductance**			**Min:** 0.00001	Level
	CStat: CUT	**Datatype:** Float	**Unit:** -	**Def:** 10.00000	**4**
	P-Group: MOTOR	**Active:** Immediately	**QuickComm.:** No	**Max:** 1000.00000	

Sets stator leakage inductance [mH] of motor equivalent circuit (phase value).

Stator leakage reactance:

$$X_{\sigma S} = \omega \cdot L_{\sigma S} = 2 \cdot \pi \cdot f \cdot L_{\sigma S} = 2 \cdot \pi \cdot P0310 \cdot \frac{P0356}{1000}$$

Index:

P0356[0] : 1st. Drive data set (DDS)
P0356[1] : 2nd. Drive data set (DDS)
P0356[2] : 3rd. Drive data set (DDS)

Dependency:

Calculated automatically using the motor model or determined using P1910 (motor identification).

P0358[3]	**Rotor leakage inductance**			**Min:** 0.0	Level
	CStat: CUT	**Datatype:** Float	**Unit:** -	**Def:** 10.0	**4**
	P-Group: MOTOR	**Active:** Immediately	**QuickComm.:** No	**Max:** 1000.0	

Sets rotor leakage inductance [mH] of motor equivalent circuit (phase value).

Rotor leakage reactance:

$$X_{\sigma R} = \omega \cdot L_{\sigma R} = 2 \cdot \pi \cdot f \cdot L_{\sigma R} = 2 \cdot \pi \cdot P0310 \cdot \frac{P0358}{1000}$$

Index:

P0358[0] : 1st. Drive data set (DDS)
P0358[1] : 2nd. Drive data set (DDS)
P0358[2] : 3rd. Drive data set (DDS)

Dependency:

Calculated automatically using the motor model or determined using P1910 (motor identification).

P0360[3]	**Main inductance**			**Min:** 0.0	Level
	CStat: CUT	**Datatype:** Float	**Unit:** -	**Def:** 10.0	**4**
	P-Group: MOTOR	**Active:** Immediately	**QuickComm.:** No	**Max:** 3000.0	

Sets main inductance [mH] of the motor equivalent circuit (phase value), see diagram below.

Main reactance:

$$X_m = \omega \cdot L_m = 2 \cdot \pi \cdot f \cdot L_m = 2 \cdot \pi \cdot P0310 \cdot \frac{P0360}{1000}$$

Index:

P0360[0] : 1st. Drive data set (DDS)
P0360[1] : 2nd. Drive data set (DDS)
P0360[2] : 3rd. Drive data set (DDS)

Dependency:

Calculated automatically using the motor model or determined using P1910 (motor identification).

Caution:

The data of equivalent circuit relates to the star equivalent circuit. Any data of the delta equivalent circuit available, therefore must be transformed to the star equivalent circuit before entering into the inverter.

Note:

T-equivalent circuit:

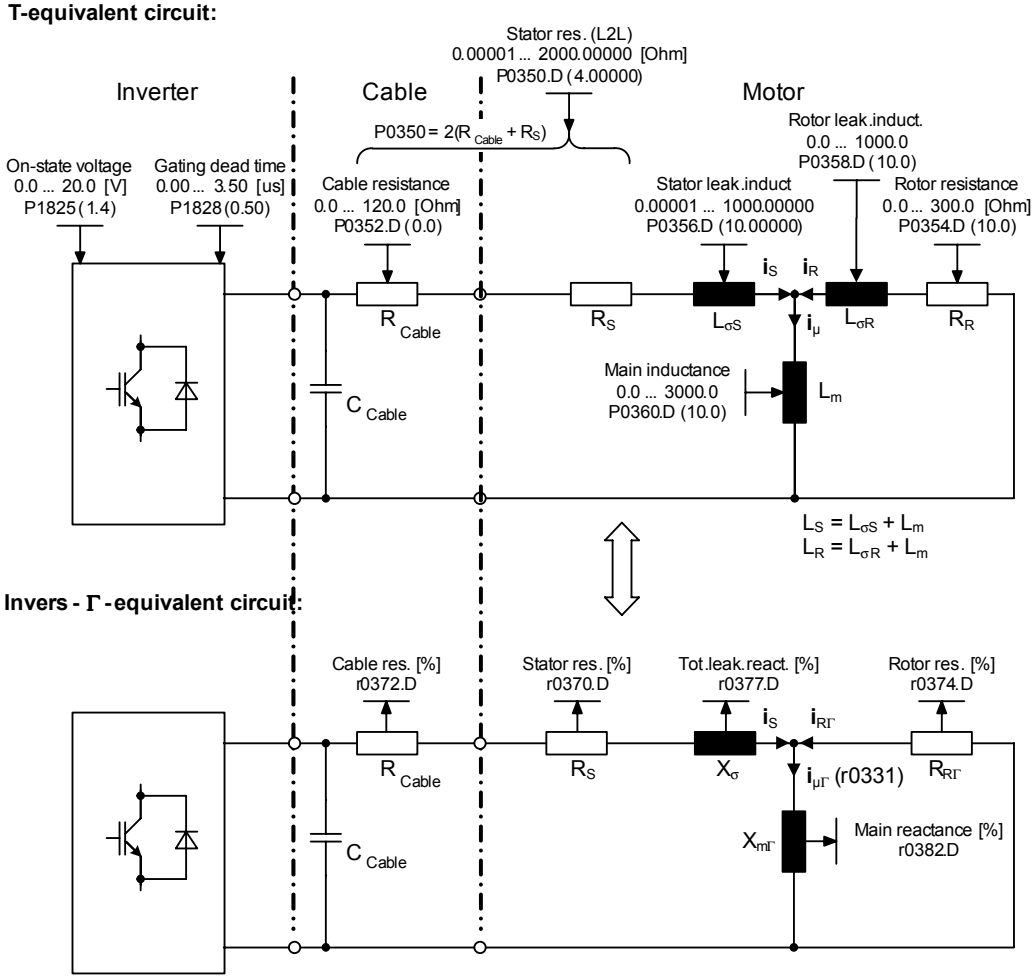

Conversion: T-equivalent curcuit --> Invers - Γ - equivalent circuit

$$k_{\sigma R} = 1 + \frac{L_{\sigma R}}{L_m}$$

$$L_{m\Gamma} = \frac{L_m}{k_{\sigma R}}$$

$$R_{R\Gamma} = \frac{R_R}{k_{\sigma R}^2}$$

$$L_\sigma = L_{\sigma S} + \frac{L_{\sigma R}}{k_{\sigma R}}$$

Conversion: Invers - Γ - equivalent circuit --> T-equivalent curcuit

$$k_{\sigma\Gamma} = 1 + (1 - k_\sigma) \cdot \frac{L_\sigma}{L_{m\Gamma}} = 1 + 0.5 \cdot \frac{L_\sigma}{L_{m\Gamma}}$$

$$R_R = R_{R\Gamma} \cdot k_{\sigma\Gamma}^2$$

$$L_{\sigma S} = k_\sigma \cdot L_\sigma = 0.5 \cdot L_\sigma$$

$$L_{\sigma R} = (1 - k_\sigma) \cdot L_\sigma \cdot k_{\sigma\Gamma} = 0.5 \cdot L_\sigma \cdot k_{\sigma\Gamma}$$

Rated motor impedance:

$$Z_N = \frac{V_{ph}}{I_{ph}} = \frac{V_N}{\sqrt{3} \cdot I_N} = \frac{P0304}{\sqrt{3} \cdot P0305} \text{ <=>} 100\%$$

P0362[3]	**Magnetizing curve flux 1**			**Min:** 0.0	Level
	CStat: CUT	**Datatype:** Float	**Unit:** %	**Def:** 60.0	**4**
	P-Group: MOTOR	**Active:** Immediately	**QuickComm.:** No	**Max:** 300.0	

Specifies first flux value of saturation characteristic in [%] relative to rated motor voltage (P0304).

The parameter settings for the values of P0362 to P0365 respectively P0366 to P0369 are illustrated in the diagram below.

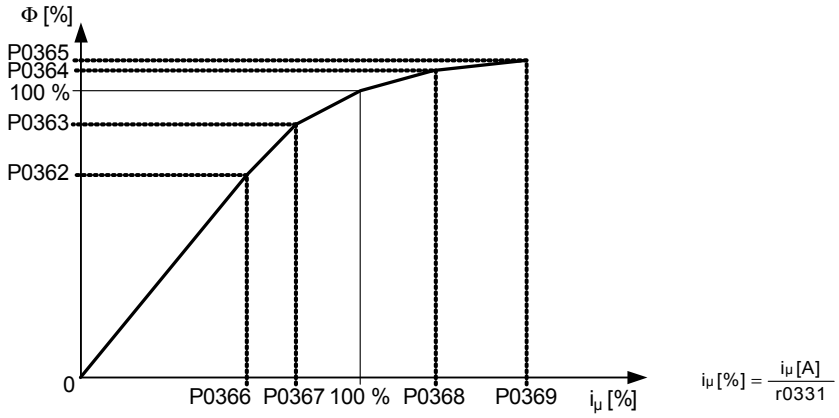

Index:

P0362[0] : 1st. Drive data set (DDS)
P0362[1] : 2nd. Drive data set (DDS)
P0362[2] : 3rd. Drive data set (DDS)

Note:

- P0362 = 100 % corresponds to rated motor flux
- Rated flux = rated EMF
- The value belongs to the first magnetizing current value and must be smaller than or equal to magnetizing curve flux 2 (P0363).
- If the magnetization values entered in P0362 to P0365 respectively P0366 to P0369 do not match the conditions (see below), a linear characteristic is applied internally.

  P0365 ≥ P0364 ≥ P0363 ≥ P0362
  P0369 ≥ P0368 ≥ P0367 ≥ P0366

P0363[3]	**Magnetizing curve flux 2**			**Min:** 0.0	Level
	CStat: CUT	**Datatype:** Float	**Unit:** %	**Def:** 85.0	**4**
	P-Group: MOTOR	**Active:** Immediately	**QuickComm.:** No	**Max:** 300.0	

Specifies second flux value of saturation characteristic in [%] relative to rated motor voltage (P0304).

Index:

P0363[0] : 1st. Drive data set (DDS)
P0363[1] : 2nd. Drive data set (DDS)
P0363[2] : 3rd. Drive data set (DDS)

Details:

See P0362 (magnetizing curve flux 1).

P0364[3]	**Magnetizing curve flux 3**			**Min:** 0.0	Level
	CStat: CUT	**Datatype:** Float	**Unit:** %	**Def:** 115.0	**4**
	P-Group: MOTOR	**Active:** Immediately	**QuickComm.:** No	**Max:** 300.0	

Specifies third flux value of saturation characteristic in [%] relative to rated motor voltage (P0304).

Index:

P0364[0] : 1st. Drive data set (DDS)
P0364[1] : 2nd. Drive data set (DDS)
P0364[2] : 3rd. Drive data set (DDS)

Details:

See P0362 (magnetizing curve flux 1).

P0365[3]	**Magnetizing curve flux 4**			**Min:** 0.0	Level
	CStat: CUT	**Datatype:** Float	**Unit:** %	**Def:** 125.0	**4**
	P-Group: MOTOR	**Active:** Immediately	**QuickComm.:** No	**Max:** 300.0	

Specifies fourth flux value of saturation characteristic in [%] relative to rated motor voltage (P0304).

Index:

P0365[0] : 1st. Drive data set (DDS)
P0365[1] : 2nd. Drive data set (DDS)
P0365[2] : 3rd. Drive data set (DDS)

Details:

See P0362 (magnetizing curve flux 1).

P0366[3]	**Magnetizing curve imag 1**			**Min:** 0.0	Level
	CStat: CUT	**Datatype:** Float	**Unit:** %	**Def:** 50.0	**4**
	P-Group: MOTOR	**Active:** Immediately	**QuickComm.:** No	**Max:** 500.0	

Specifies first magnetizing current value of the saturation characteristic in [%] relative to the rated magnetizing current (P0331).

Index:

P0366[0] : 1st. Drive data set (DDS)
P0366[1] : 2nd. Drive data set (DDS)
P0366[2] : 3rd. Drive data set (DDS)

Dependency:

Affects P0320 (motor magnetizing current).

Details:

See P0362 (magnetizing curve flux 1).

P0367[3]	**Magnetizing curve imag 2**			**Min:** 0.0	Level
	CStat: CUT	**Datatype:** Float	**Unit:** %	**Def:** 75.0	**4**
	P-Group: MOTOR	**Active:** Immediately	**QuickComm.:** No	**Max:** 500.0	

Specifies second magnetizing current value of saturation characteristic in [%] relative to rated magnetizing current (P0331).

Index:

P0367[0] : 1st. Drive data set (DDS)
P0367[1] : 2nd. Drive data set (DDS)
P0367[2] : 3rd. Drive data set (DDS)

Dependency:

Affects P0320 (motor magnetizing current).

Details:

See P0362 (magnetizing curve flux 1).

P0368[3]	**Magnetizing curve imag 3**			**Min:** 0.0	Level
	CStat: CUT	**Datatype:** Float	**Unit:** %	**Def:** 135.0	**4**
	P-Group: MOTOR	**Active:** Immediately	**QuickComm.:** No	**Max:** 500.0	

Specifies third magnetizing current value of saturation characteristic in [%] relative to rated magnetizing current (P0331).

Index:

P0368[0] : 1st. Drive data set (DDS)
P0368[1] : 2nd. Drive data set (DDS)
P0368[2] : 3rd. Drive data set (DDS)

Dependency:

Affects P0320 (motor magnetizing current).

Details:

See P0362 (magnetizing curve flux 1).

P0369[3]	**Magnetizing curve imag 4**			**Min:** 0.0	Level
	CStat: CUT	**Datatype:** Float	**Unit:** %	**Def:** 170.0	**4**
	P-Group: MOTOR	**Active:** Immediately	**QuickComm.:** No	**Max:** 500.0	

Specifies fourth magnetizing current value of saturation characteristic in [%] relative to rated magnetizing current (P0331).

Index:

P0369[0] : 1st. Drive data set (DDS)
P0369[1] : 2nd. Drive data set (DDS)
P0369[2] : 3rd. Drive data set (DDS)

Dependency:

Affects P0320 (motor magnetizing current).

Details:

See P0362 (magnetizing curve flux 1).

r0370[3]	**Stator resistance [%]**			**Min:** -	Level
		Datatype: Float	**Unit:** %	**Def:** -	**4**
	P-Group: MOTOR			**Max:** -	

Displays standardized stator resistance of motor equivalent circuit (phase value) in [%] of the temperature value in P0625.

Index:

r0370[0] : 1st. Drive data set (DDS)
r0370[1] : 2nd. Drive data set (DDS)
r0370[2] : 3rd. Drive data set (DDS)

Note:

Rated motor impedance:

$$Z_N = \frac{V_{ph}}{I_{ph}} = \frac{V_N}{\sqrt{3} \cdot I_N} = \frac{P0304}{\sqrt{3} \cdot P0305} \text{ <=>100\%}$$

r0372[3]	**Cable resistance [%]**			**Min:** -	Level
		Datatype: Float	**Unit:** %	**Def:** -	**4**
	P-Group: MOTOR			**Max:** -	

Displays standardized cable resistance of motor equivalent circuit (phase value)in [%]. It is estimated to be 20 % of the stator resistance.

Index:

r0372[0] : 1st. Drive data set (DDS)
r0372[1] : 2nd. Drive data set (DDS)
r0372[2] : 3rd. Drive data set (DDS)

Note:

Rated motor impedance:

$$Z_N = \frac{V_{ph}}{I_{ph}} = \frac{V_N}{\sqrt{3} \cdot I_N} = \frac{P0304}{\sqrt{3} \cdot P0305} \text{ <=>100\%}$$

r0373[3]	**Rated stator resistance [%]**			**Min:** -	Level
		Datatype: Float	**Unit:** %	**Def:** -	**4**
	P-Group: MOTOR			**Max:** -	

Displays the nominal stator resistance of the motor equivalent circuit diagram (phase value) as a [%] at the ambient temperature + temperature rise of the stator winding.

Index:

r0373[0] : 1st. Drive data set (DDS)
r0373[1] : 2nd. Drive data set (DDS)
r0373[2] : 3rd. Drive data set (DDS)

Note:

- ambient temperature, refer to P0625
- temperature rise of the stator winding, refer to P0627

Rated motor impedance:

$$Z_N = \frac{V_{ph}}{I_{ph}} = \frac{V_N}{\sqrt{3} \cdot I_N} = \frac{P0304}{\sqrt{3} \cdot P0305} \text{ <=>100\%}$$

r0374[3]	**Rotor resistance [%]**	**Datatype:** Float	**Unit:** %	**Min:** - **Def:** - **Max:** -	Level **4**
	P-Group: MOTOR				

Displays the rotor resistance of the motor equivalent circuit diagram (phase value) as a [%] at the ambient temperature (in the cold state).

$$r0374 = \frac{R_{R\Gamma}}{Z_N} \cdot 100\% = \frac{R_R}{k_{\sigma R}^2 \cdot Z_N} \cdot 100\% = \frac{P0354 \cdot P0360^2}{Z_N (1 + P0358)^2} \cdot 100\%$$

Index:

r0374[0] : 1st. Drive data set (DDS)
r0374[1] : 2nd. Drive data set (DDS)
r0374[2] : 3rd. Drive data set (DDS)

Note:

Ambient temperature, refer to P0625

Rated motor impedance:

$$Z_N = \frac{V_{ph}}{I_{ph}} = \frac{V_N}{\sqrt{3} \cdot I_N} = \frac{P0304}{\sqrt{3} \cdot P0305} \text{ <=>} 100\%$$

r0376[3]	**Rated rotor resistance [%]**	**Datatype:** Float	**Unit:** %	**Min:** - **Def:** - **Max:** -	Level **4**
	P-Group: MOTOR				

Displays the nominal rotor resistance of the motor equivalent circuit diagram (phase value) as a [%] at the ambient temperature + temperature rise of the rotor winding.

Index:

r0376[0] : 1st. Drive data set (DDS)
r0376[1] : 2nd. Drive data set (DDS)
r0376[2] : 3rd. Drive data set (DDS)

Note:

- ambient temperature, refer to P0625
- temperature rise of the rotor winding, refer to P0628

Rated motor impedance:

$$Z_N = \frac{V_{ph}}{I_{ph}} = \frac{V_N}{\sqrt{3} \cdot I_N} = \frac{P0304}{\sqrt{3} \cdot P0305} \text{ <=>} 100\%$$

r0377[3]	**Total leakage reactance [%]**	**Datatype:** Float	**Unit:** %	**Min:** - **Def:** - **Max:** -	Level **4**
	P-Group: MOTOR				

Displays standardized total leakage reactance of the motor equivalent circuit (phase value) in [%].

$$r0377 = \frac{L_\sigma}{Z_N} \cdot 100\% = \frac{L_{\sigma S} + \frac{L_{\sigma R}}{k_{\sigma R}}}{Z_N} \cdot 100\% = \frac{P0356 + \frac{P0358 \cdot P0360}{P0358 + P0360}}{Z_N} \cdot 100\%$$

Index:

r0377[0] : 1st. Drive data set (DDS)
r0377[1] : 2nd. Drive data set (DDS)
r0377[2] : 3rd. Drive data set (DDS)

Note:

Rated motor impedance:

$$Z_N = \frac{V_{ph}}{I_{ph}} = \frac{V_N}{\sqrt{3} \cdot I_N} = \frac{P0304}{\sqrt{3} \cdot P0305} \text{ <=>} 100\%$$

r0382[3]	**Main reactance [%]**	**Datatype:** Float	**Unit:** %	**Min:** - **Def:** - **Max:** -	Level **4**
	P-Group: MOTOR				

Displays standardized main reactance of the motor equivalent circuit (phase value) in [%].

$$r0382 = \frac{L_{m\Gamma}}{Z_N} \cdot 100\% = \frac{L_m}{k_{\sigma R} \cdot Z_N} \cdot 100\% = \frac{P0360^2}{Z_N (P0360 + P0358)} \cdot 100\%$$

Index:

r0382[0] : 1st. Drive data set (DDS)
r0382[1] : 2nd. Drive data set (DDS)
r0382[2] : 3rd. Drive data set (DDS)

Note:

Rated motor impedance:

$$Z_N = \frac{V_{ph}}{I_{ph}} = \frac{V_N}{\sqrt{3} \cdot I_N} = \frac{P0304}{\sqrt{3} \cdot P0305} \text{ <=>} 100\%$$

r0384[3]	**Rotor time constant**			**Min:** -	Level
		Datatype: Float	**Unit:** ms	**Def:** -	**3**
	P-Group: MOTOR			**Max:** -	

Displays calculated rotor time constant [ms].

Index:

r0384[0] : 1st. Drive data set (DDS)
r0384[1] : 2nd. Drive data set (DDS)
r0384[2] : 3rd. Drive data set (DDS)

r0386[3]	**Total leakage time constant**			**Min:** -	Level
		Datatype: Float	**Unit:** ms	**Def:** -	**4**
	P-Group: MOTOR			**Max:** -	

Displays total leakage time constant of motor.

Index:

r0386[0] : 1st. Drive data set (DDS)
r0386[1] : 2nd. Drive data set (DDS)
r0386[2] : 3rd. Drive data set (DDS)

r0394	**CO: Stator resistance IGBT [%]**			**Min:** -	Level
		Datatype: Float	**Unit:** %	**Def:** -	**4**
	P-Group: MOTOR			**Max:** -	

Displays stator resistance calculated in [%] from IGBT ON voltage and current amplitude.

Note:

Rated motor impedance:

$$Z_N = \frac{V_{ph}}{I_{ph}} = \frac{V_N}{\sqrt{3} \cdot I_N} = \frac{P0304}{\sqrt{3} \cdot P0305} \text{ <=>100\%}$$

r0395	**CO: Total stator resistance [%]**			**Min:** -	Level
		Datatype: Float	**Unit:** %	**Def:** -	**3**
	P-Group: MOTOR			**Max:** -	

Displays the actual stator resistance (combined stator/cable resistance) of the motor as a [%] as a function of the actual stator winding temperature.

Note:

Actual stator winding temperature, refer to r0632

Rated motor impedance:

$$Z_N = \frac{V_{ph}}{I_{ph}} = \frac{V_N}{\sqrt{3} \cdot I_N} = \frac{P0304}{\sqrt{3} \cdot P0305} \text{ <=>100\%}$$

r0396	**CO: Act. rotor resistance**			**Min:** -	Level
		Datatype: Float	**Unit:** %	**Def:** -	**3**
	P-Group: MOTOR			**Max:** -	

Displays the actual rotor resistance of the motor equivalent circuit diagram (phase value) as a [%] as a function of the actual rotor winding temperature.

Note:

- Actual rotor winding temperature, refer to r0633
- Values greater than 25 % tend to produce excessive motor slip. Check rated motor speed [rpm] value (P0311).

Rated motor impedance:

$$Z_N = \frac{V_{ph}}{I_{ph}} = \frac{V_N}{\sqrt{3} \cdot I_N} = \frac{P0304}{\sqrt{3} \cdot P0305} \text{ <=>100\%}$$

3.5 Speed encoder

P0400[3]	**Select encoder type**			**Min:** 0	Level
	CStat: CT	**Datatype:** U16	**Unit:** -	**Def:** 0	**2**
	P-Group: ENCODER	**Active:** Immediately	**QuickComm.:** No	**Max:** 2	

Selects encoder type (number of encoder channels).

Possible Settings:

0 Disabled
1 Single channel encoder
2 Quadrature encoder without zero pulse

Index:

P0400[0] : 1st. Drive data set (DDS)
P0400[1] : 2nd. Drive data set (DDS)
P0400[2] : 3rd. Drive data set (DDS)

Dependency:

Following table displays the setting of P0400 which depends upon the number of encoder channels:

Parameter	Terminal	Track	Encoder output
P0400 = 1	A	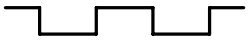	single ended
	A AN	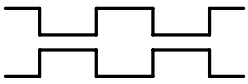	differential
P0400 = 2	A B	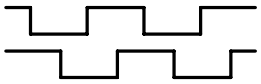	single ended
	A AN B BN	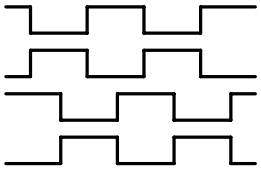	differential

Following table displays the setting the of the encoder DIPs on the encoder option modul which have to be set depending on the encoder type (TTL, HTL) and encoder output:

Type	Output	
	single ended	differential
TTL (e.g. 1XP8001-2)	111111	010101
HTL (e.g. 1XP8001-1)	101010	000000

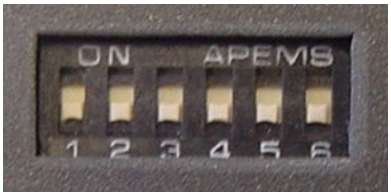

Caution:

When using Vector Control with encoder-feedback , the direction of rotation of the Encoder and Motor must be the same. If this is not achieved, then the functional operation of the Vector Control will not be guaranteed (positive instead of negative feedback). Extreme care must therefore be taken with respect to the connection of the motor to the inverter as well as the correct connection of the encoder to the Encoder module. Motor and Encoder must not be incorrectly wired up !

When commissioning Vector Control with encoder-feedback (VC), the drive should be configured for V/f mode (see P1300) first. Run the drive and compare r0061 with r0021 that should agree in

- sign and
- magnitude (with a deviation of only a few percent).

Only if both criteria are fullfilled, change P1300 and select VC (P1300 = 21 or 23).

P0400 = 1 (single channel encoder) will only allow operation in one direction. If operation in both directions is required, connect an encoder with 2 channels (A and B) and select setting 2. See the Operating Instructions of the encoder module for more information.

Note:

Encoders with zero pulse can also be connected, but the zero pulse is not used in MM4.

The term "quadrature" in setting 2 refers to two periodic functions separated by a quarter cycle or 90 degrees.

r0403	**CO/BO: Encoder status word**			**Min:** -	Level
		Datatype: U16	**Unit:** -	**Def:** -	**2**
	P-Group: COMMANDS			**Max:** -	

Displays status word of encoder (in bit format).

Bitfields:

Bit00	Encoder module active	0	NO	1	YES
Bit01	Encoder error	0	NO	1	YES
Bit02	Signal o.k.	0	NO	1	YES
Bit03	Encoder low speed loss	0	NO	1	YES
Bit04	HW timer used	0	NO	1	YES

Details:

See description of seven-segment display given in the "Introduction to MICROMASTER System Parameters" in this manual.

P0408[3]	**Encoder pulses per revolution**			**Min:** 2	Level
	CStat: CT	**Datatype:** U16	**Unit:** -	**Def:** 1024	**2**
	P-Group: ENCODER	**Active:** Immediately	**QuickComm.:** No	**Max:** 20000	

Specifies the number of encoder pulses per revolution.

Index:

P0408[0] : 1st. Drive data set (DDS)
P0408[1] : 2nd. Drive data set (DDS)
P0408[2] : 3rd. Drive data set (DDS)

Note:

The encoder resolution (pulses per revolution P0408) which may be entered will be limited by the max. pulse frequency of the encoder option board (f_max = 300 kHz).

The following equation calculates the encoder frequency depending on the encoder resoulution and the rotational speed (rpm). The encoder frequency has to be less than the max. pulse frequency:

$$f_{max} > f = \frac{p0408 \times rpm}{60}$$

P0491[3]	**Reaction on freq. signal loss**			**Min:** 0	Level
	CStat: CT	**Datatype:** U16	**Unit:** -	**Def:** 0	**2**
	P-Group: ENCODER	**Active:** first confirm	**QuickComm.:** No	**Max:** 1	

Selects reaction on loss of frequency signal.

Possible Settings:

0 Do not change to SLVC
1 Change to SLVC

Index:

P0491[0] : 1st. Drive data set (DDS)
P0491[1] : 2nd. Drive data set (DDS)
P0491[2] : 3rd. Drive data set (DDS)

P0492[3]	**Allowed frequency difference**			**Min:** 0.00	Level
	CStat: CT	**Datatype:** Float	**Unit:** Hz	**Def:** 10.00	**2**
	P-Group: ENCODER	**Active:** Immediately	**QuickComm.:** No	**Max:** 100.00	

Parameter P0492 is used for low and high frequency encoder loss detection (fault: F0090).

1. High frequency encoder loss detection:
   This condition occurs when the allowed frequency and the allowed difference of the frequency signals between samples, set in P0492 is exceeded.
   Condition:
   - Act. freq. > P0492 and f(t_2) - f(t_1) > P0492

2. Low frequency encoder loss detection:
   This condition occurs when the actual frequency is < P0492 when encoder loss occurs.
   Condition a):
   - r0061 = 0 and torque limit and then
   - r0061 = 0 with setpoint frequency > 0 for time > P0494

   or

   Condition b):
   - Act. freq. < P0492 and f (t_2) < P0492 and ASIC detect channel B loss

Dependency:

This parameter is updated when motor start-up time P0345 is changed or when a frequency-loop optimisation is performed (P1960 = 1). There is a fixed delay of 40 ms before acting upon loss of encoder at high frequencies.

Caution:

P0492 = 0 (disabled):
When allowed frequency difference is set to 0, both the high frequency and low frequency encoder loss detection is disabled, thus encoder loss will not be detected.

If encoder loss detection is disabled and encoder loss occurs, then operation of the motor may become unstable.

Note:

The value of P0492 should be approx. 2x rated slip, if the motor power is less (<=) 90 kW
The value of P0492 should be approx. 4x rated slip, if the motor power is greater (>) 90 kW

P0494[3]	Delay frequency loss reaction			Min: 0	Level
	CStat: CUT	Datatype: U16	Unit: ms	Def: 10	2
	P-Group: ENCODER	Active: first confirm	QuickComm.: No	Max: 65000	

Used for low frequency encoder loss detection. If the motor shaft frequency is less than the value in P0492 then encoder loss is detected using a low frequency encoder loss detection algorithm. This parameter selects the delay between loss of encoder at low frequency and reaction to the encoder loss.

Index:

P0494[0] : 1st. Drive data set (DDS)
P0494[1] : 2nd. Drive data set (DDS)
P0494[2] : 3rd. Drive data set (DDS)

Dependency:

This parameter is updated when motor start-up time P0345 is changed or when a frequency-loop optimisation is performed (P1960 = 1).

Caution:

P0494 = 0 (disabled):
When the delay in P0494 is set to 0, then low frequency encoder loss detection is disabled and low frequency encoder loss cannot be detected (high frequency encoder loss detection will still operate if P0492 > 0).

If low frequency encoder loss detection is disabled and encoder should be lost at low frequency, then operation of motor may become unstable.

3.6 Application macros

P0500[3]	Technological application			Min: 0	Level
	CStat: CT	Datatype: U16	Unit: -	Def: 0	3
	P-Group: TECH_APL	Active: first confirm	QuickComm.: Yes	Max: 3	

Selects technological application. Sets control mode (P1300).

Possible Settings:

0 Constant torque
1 Pumps and fans
3 Simple Positioning

Index:

P0500[0] : 1st. Drive data set (DDS)
P0500[1] : 2nd. Drive data set (DDS)
P0500[2] : 3rd. Drive data set (DDS)

Dependency:

See parameter P0205

3.7 Motor temperature

P0601[3]	Motor temperature sensor			Min: 0	Level
	CStat: CUT	Datatype: U16	Unit: -	Def: 0	2
	P-Group: MOTOR	Active: first confirm	QuickComm.: No	Max: 2	

Selects motor temperature sensor.

Possible Settings:

0 No sensor
1 PTC thermistor
2 KTY84

Index:

P0601[0] : 1st. Drive data set (DDS)
P0601[1] : 2nd. Drive data set (DDS)
P0601[2] : 3rd. Drive data set (DDS)

Dependency:

If "no sensor" is selected, the motor temperature monitoring will be done based on the estimated value of the thermal motor model.

The temperature of the motor, when a thermal sensor is connected is calculated using the thermal motor model. When a KTY sensor is fitted, the loss of connection can be detected (Alarm F0015). Using the methods described above the monitoring of the temperature will automatically switch to the thermal model using values derived from the estimated value. Using a PTC sensor the temperature of the motor is calculated by the sensor in conjunction with the thermal model. This allows for redundancy of the monitoring process.

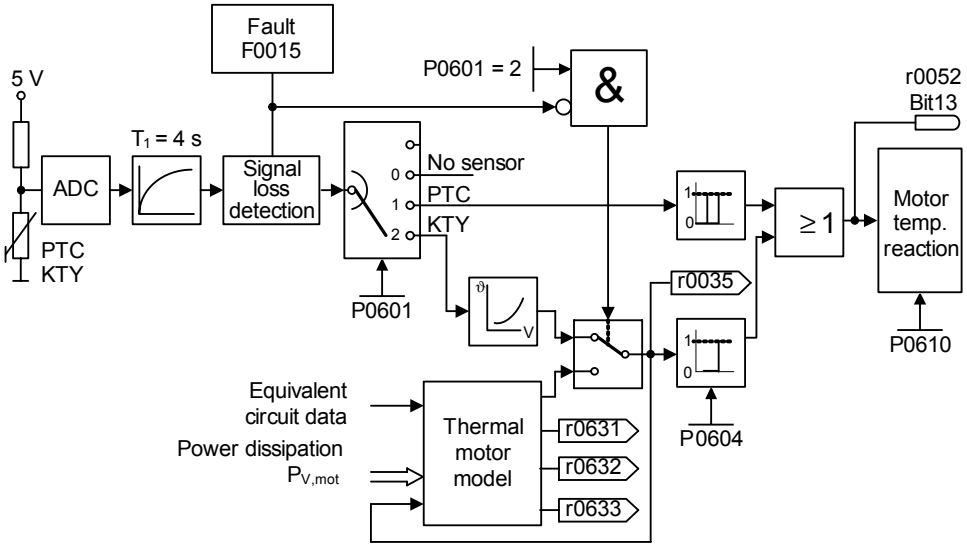

Thermal motor model:
The data, required for the thermal motor model, is estimated from the rating plate data entered during the quick commissioning. This data permits reliable, stable operation for standard Siemens motors. If required, parameter changes must be made for motors from third-party manufacturers. We always recommend that an automatic motor data identification run is made after quick commissioning so that the electrical equivalent circuit diagram data can be determined. This allows a more precise calculation of the losses which occur in the motor which has a positive impact on the accuracy of the thermal motor model.

PTC sensor:
A PTC temperature sensor (Positive-Temperature-Characteristic) is a resistor with a positive temperature characteristic which, at normal temperatures, has a low resistance value (50-100 Ohm). Normally, three PTC temperature sensors are connected in series in the motor (depending on the motor manufacturer), thus producing a "cold resistance value" ranging from 150 to 300 Ohm. PTC temperature sensors are also frequently referred to as cold conductors.

However, at a certain threshold temperature, the resistance rises rapidly. The threshold temperature is selected by the motor manufacturer in such a way that it corresponds to the nominal temperature value of the motor insulation. This allows the change in the resistance value to be deployed to protect the motor, as the PTCs are embedded in the motor windings. PTC temperature sensors are not suitable for measuring temperature.

When the PTC is connected to the control terminals 14 and 15 of the MM4 and the selection motor temperature sensor has been activated by the setting P0601 = 1 (PTC sensor), the PTC temperature sensor then protects the motor by means of the trip device in the MM4.

Should the resistance value of 2000 Ohm be exceeded, the inverter displays error F0011 (motor overheating).

If the resistance value is below 100 Ohm, the error F0015 (no motor temperature signal) is then output.

This protects the motor from overheating and also from a sensor wire breakage.

The motor is additionally monitored by the thermal motor model in the inverter, thus providing a redundant system for monitoring the motor.

KTY84 sensor:
The sensor KTY84 is basically a semi-conductor thermo-sensor (diode), the resistance value of which varies from some 500 Ohm at 0°C to 2600 Ohm at 300°C. It has a positive temperature coefficient and, in contrast to the PTCs, has an almost linear temperature characteristic. The resistor behaviour is comparable to that of a measuring resistor with a very high temperature coefficient.

Note the following when connecting the polarity. Connect the sensor so that the diode is polarized in the operative direction. That means that the anode needs to be connected to terminal 14 = PTC A (+) and the cathode to terminal 15 = PTC B (-).

If the temperature monitoring function is activated with the setting P0601 = 2, the temperature of the sensor (thus that of the motor windings) is then written to parameter r0035.

The motor overheating warning threshold needs to be assigned with parameter P0604 (the works setting is 130°C). This warning threshold depends on the motors thermal class. Also refer to the table below in this context.

Extract of IEC 85	
Insulation class	End temperature
Y	90 °C
A	105 °C
E	120 °C
B	130 °C
F	155 °C
H	180 °C

The motor overheating disturbance threshold is automatically set by the inverter at 10% higher than the temperature declared in parameter P0604.

If the sensor KTY84 is activated, the motor temperature is then additionally calculated via the thermal motor model. Should the sensor KTY84 recognise a wire breakage, an alarm F0015 (loss of the motor temperature signal) is then generated and the thermal motor model is automatically switched to.

Connection failure:
If the connection to the PTC or KTY84 sensor becomes open circuit or short circuit, a fault will be indicated, and by default the drive will trip.

P0604[3] Threshold motor temperature

						Level
CStat:	CUT	**Datatype:** Float	**Unit:** °C	**Min:**	0.0	**2**
P-Group:	MOTOR	**Active:** Immediately	**QuickComm.:** No	**Def:**	130.0	
				Max:	200.0	

Enters warning threshold for motor temperature protection.

The trip temperature defined always 10 % higher than the warning level P0604. When act. motor temperature exeeds trip temperature than inverter trip as defined in P0610.

$\vartheta_{trip} = 1.1 \cdot \vartheta_{warn} = 1.1 \cdot P0604$ ϑ_{warn} : Warning threshold (P0604)
ϑ_{trip} : Trip threshold (max. permissible temperature)

Index:
P0604[0] : 1st. Drive data set (DDS)
P0604[1] : 2nd. Drive data set (DDS)
P0604[2] : 3rd. Drive data set (DDS)

Dependency:
This value should be at least 40°C greater than the motor ambient temperature P0625.

P0604 ≥ P0625 + 40 °C

Note:
Default value depends on P0300 (select motor type).

P0610[3] Motor temperature reaction

						Level
CStat:	CT	**Datatype:** U16	**Unit:** -	**Min:**	0	**3**
P-Group:	MOTOR	**Active:** first confirm	**QuickComm.:** No	**Def:**	2	
				Max:	2	

Defines reaction when motor temperature reaches warning threshold.

Possible Settings:
0 Warning, no reaction, no trip
1 Warning, Imax reduction, trip F0011
2 Warning, no reaction, trip F0011

Index:
P0610[0] : 1st. Drive data set (DDS)
P0610[1] : 2nd. Drive data set (DDS)
P0610[2] : 3rd. Drive data set (DDS)

Dependency:
$\vartheta_{trip} = 1.1 \cdot \vartheta_{warn} = 1.1 \cdot P0604$ ϑ_{warn} : Warning threshold (P0604)
ϑ_{trip} : Trip threshold (max. permissible temperature)

Note:
P0610 = 1:
If the max. permissible current Imax is reduced, this results in a lower output frequency.

The motor temperature depends on many factors. These factors include the size of the motor, the ambient temperature, the previous motor load and naturally the load current.

Because most motors are cooled by fans integrated in the motor and running at the motor speed, the speed of the motor is also important. Clearly a motor running with a high current (maybe due to boost) and a low speed, will overheat more quickly than one running at 50 or 60 Hz, full load. The MM4 take account of these factors.

P0625[3]	**Ambient motor temperature**			**Min:** -40.0	Level
	CStat: CUT	**Datatype:** Float	**Unit:** °C	**Def:** 20.0	**3**
	P-Group: MOTOR	**Active:** Immediately	**QuickComm.:** No	**Max:** 80.0	

Ambient temperature of motor. The parameter for the stator resistance P0350 and rotor resistance P0354 relate to the ambient temperature.

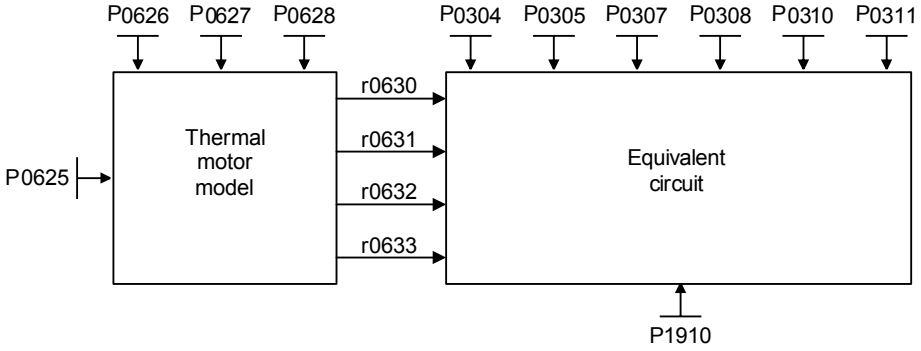

Index:

P0625[0] : 1st. Drive data set (DDS)
P0625[1] : 2nd. Drive data set (DDS)
P0625[2] : 3rd. Drive data set (DDS)

Note:

Following items should be considered when using P0625:

- The ambient temperature has to be entered prior to motor data identification.
- An accuracy of +/- 5°C is adequate.
- The motor data identification should be carried out on a cold motor (ambient temperature = stator temperature = rotor temperature).
- The highest accuracy at temperature adaption of the stator resistance and rotor resistance can be achieved by connecting a KTY84 sensor.

P0626[3]	**Overtemperature stator iron**			**Min:** 20.0	Level
	CStat: CUT	**Datatype:** Float	**Unit:** °C	**Def:** 50.0	**4**
	P-Group: MOTOR	**Active:** Immediately	**QuickComm.:** No	**Max:** 200.0	

Overtemperature of stator iron.

Index:

P0626[0] : 1st. Drive data set (DDS)
P0626[1] : 2nd. Drive data set (DDS)
P0626[2] : 3rd. Drive data set (DDS)

Note:

See parameter P0627

P0627[3]	**Overtemperature stator winding**			**Min:** 20.0	Level
	CStat: CUT	**Datatype:** Float	**Unit:** °C	**Def:** 80.0	**4**
	P-Group: MOTOR	**Active:** Immediately	**QuickComm.:** No	**Max:** 200.0	

Overtemperature of the stator winding.

Index:

P0627[0] : 1st. Drive data set (DDS)
P0627[1] : 2nd. Drive data set (DDS)
P0627[2] : 3rd. Drive data set (DDS)

Note:

Temperature rise:
The losses occurring in the motor are converted into heat (thermal energy). This is the reason that permissible limit temperature rises are defined for windings and other mechanical parts and components of the motors. The temperature rise of the motor is defined as the difference between the temperature of a motor component (e.g. rotor winding) and the temperature of the cooling medium (e.g. ambient air temperature) (EN 60034-1). The temperature rise determined by the motor manufacturer by making the appropriate measurements is the difference between the temperature of the winding at the end of the measurement and the temperature of the cooling medium.

$\vartheta_{ü} = \vartheta_2 - \vartheta_K$

$\vartheta_{ü}$: Temperature rise
ϑ_2 : Temperature at the end of the measurement
ϑ_K : Cooling-medium temperature

The permissible temperature rises of the windings is classified in insulating classes. The insulating class valid for the particular motor is specified on the motor rating plate.

The following points should be carefully observed:
- The temperature rises of the stator/rotor winding are only applicable for sinusoidal operation (basic fundamental).
- The temperature of stator/rotor winding rises when the motor is fed with a sinusoidal voltage as well as also losses (modulation losses, losses due to harmonics) caused as a result of drive converter operation.
- The value may only be modified if the motor is in the cold condition (ambient temperature). The motor identification run should be carried-out after the value has been changed.

P0628[3]	**Overtemperature rotor winding**			**Min:** 20.0	Level
	CStat: CUT	**Datatype:** Float	**Unit:** °C	**Def:** 100.0	**4**
	P-Group: MOTOR	**Active:** Immediately	**QuickComm.:** No	**Max:** 200.0	

Overtemperature of the rotor winding.

Index:

P0628[0] : 1st. Drive data set (DDS)
P0628[1] : 2nd. Drive data set (DDS)
P0628[2] : 3rd. Drive data set (DDS)

Note:

See parameter P0627

r0630[3]	**CO: Ambient temperature**			**Min:** -	Level
		Datatype: Float	**Unit:** °C	**Def:** -	**4**
	P-Group: MOTOR			**Max:** -	

Displays ambient temperature of motor mass model.

Index:

r0630[0] : 1st. Drive data set (DDS)
r0630[1] : 2nd. Drive data set (DDS)
r0630[2] : 3rd. Drive data set (DDS)

r0631[3]	**CO: Stator iron temperature**			**Min:** -	Level
		Datatype: Float	**Unit:** °C	**Def:** -	**4**
	P-Group: MOTOR			**Max:** -	

Displays iron temperature of motor mass model.

Index:

r0631[0] : 1st. Drive data set (DDS)
r0631[1] : 2nd. Drive data set (DDS)
r0631[2] : 3rd. Drive data set (DDS)

r0632[3]	**CO: Stator winding temperature**			**Min:** -	Level
		Datatype: Float	**Unit:** °C	**Def:** -	**4**
	P-Group: MOTOR			**Max:** -	

Displays stator winding temperature of motor mass model.

Index:

r0632[0] : 1st. Drive data set (DDS)
r0632[1] : 2nd. Drive data set (DDS)
r0632[2] : 3rd. Drive data set (DDS)

r0633[3]	**CO: Rotor winding temperature**			**Min:** -	Level
		Datatype: Float	**Unit:** °C	**Def:** -	**4**
	P-Group: MOTOR			**Max:** -	

Displays rotor winding temperature of motor mass model.

Index:

r0633[0] : 1st. Drive data set (DDS)
r0633[1] : 2nd. Drive data set (DDS)
r0633[2] : 3rd. Drive data set (DDS)

P0640[3]	**Motor overload factor [%]**			**Min:** 10.0	Level
	CStat: CUT	**Datatype:** Float	**Unit:** %	**Def:** 150.0	**2**
	P-Group: MOTOR	**Active:** Immediately	**QuickComm.:** Yes	**Max:** 400.0	

Defines motor overload current limit in [%] relative to P0305 (rated motor current).

Index:

P0640[0] : 1st. Drive data set (DDS)
P0640[1] : 2nd. Drive data set (DDS)
P0640[2] : 3rd. Drive data set (DDS)

Dependency:

Limited to maximum inverter current or to 400 % of rated motor current (P0305), whichever is the lower.

$$P0640_{max} = \frac{\min(r0209, 4 \cdot P0305)}{P0305} \cdot 100$$

Details:

See function diagram for current limitation.

3.8 Command source

P0700[3]	Selection of command source			Min: 0	Level
	CStat: CT	Datatype: U16	Unit: -	Def: 2	1
	P-Group: COMMANDS	Active: first confirm	QuickComm.: Yes	Max: 6	

Selects digital command source.

Possible Settings:

0 Factory default setting
1 BOP (keypad)
2 Terminal
4 USS on BOP link
5 USS on COM link
6 CB on COM link

Index:

P0700[0] : 1st. Command data set (CDS)
P0700[1] : 2nd. Command data set (CDS)
P0700[2] : 3rd. Command data set (CDS)

Example:

Changing form P0700 = 1 to P0700 = 2 sets all digital inputs to default settings.

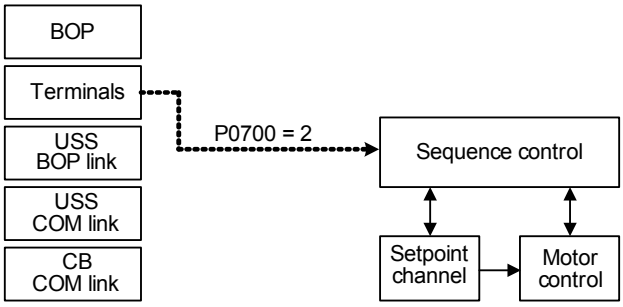

Caution:

Be aware, by changing of parameter P0700 all BI parameters are reset to the default value or modified as listed in the table below.

If the Inverter is being controlled via the AOP, select USS (with the corresponding interface) for the Command Source. If the AOP is connected to the BOP-Link Interface, then set Parameter P0700 to the value 4 (P0700 = 4).

Note:

Changing this parameter sets (to default) all settings on item selected (see table).

	P0700 = 0	P0700 = 1	P0700 = 2	P0700 = 4	P0700 = 5	P0700 = 6
P0701	1	0	1	0	0	0
P0702	12	0	12	0	0	0
P0703	9	9	9	9	9	9
P0704	15	15	15	15	15	15
P0705	15	15	15	15	15	15
P0706	15	15	15	15	15	15
P0707	0	0	0	0	0	0
P0708	0	0	0	0	0	0
P0731	52.3	52.3	52.3	52.3	52.3	52.3
P0732	52.7	52.7	52.7	52.7	52.7	52.7
P0733	0.0	0.0	0.0	0.0	0.0	0.0
P0800	0.0	0.0	0.0	0.0	0.0	0.0
P0801	0.0	0.0	0.0	0.0	0.0	0.0

P0840	722.0	19.0	722.0	2032.0	2036.0	2090.0
P0842	0.0	0.0	0.0	0.0	0.0	0.0
P0844	1.0	19.1	1.0	2032.1	2036.1	2090.1
P0845	19.1	19.1	19.1	19.1	19.1	19.1
P0848	1.0	1.0	1.0	2032.2	2036.2	2090.2
P0849	1.0	1.0	1.0	1.0	1.0	1.0
P0852	1.0	1.0	1.0	2032.3	2036.3	2090.3

	P0700 = 0	**P0700 = 1**	**P0700 = 2**	**P0700 = 4**	**P0700 = 5**	**P0700 = 6**
P1020	0.0	0.0	0.0	0.0	0.0	0.0
P1021	0.0	0.0	0.0	0.0	0.0	0.0
P1022	0.0	0.0	0.0	0.0	0.0	0.0
P1023	722.3	722.3	722.3	722.3	722.3	722.3
P1026	722.4	722.4	722.4	722.4	722.4	722.4
P1028	722.5	722.5	722.5	722.5	722.5	722.5
P1035	19.13	19.13	19.13	2032.13	2036.13	2090.13
P1036	19.14	19.14	19.14	2032.14	2036.14	2090.14
P1055	0.0	19.8	0.0	2032.8	2036.8	2090.8
P1056	0.0	0.0	0.0	2032.9	2036.9	2090.9
P1074	0.0	0.0	0.0	0.0	0.0	0.0
P1110	0.0	0.0	0.0	0.0	0.0	0.0
P1113	722.1	19.11	722.1	2032.11	2036.11	2090.11
P1124	0.0	0.0	0.0	0.0	0.0	0.0
P1140	1.0	1.0	1.0	2032.4	2036.4	2090.4
P1141	1.0	1.0	1.0	2032.5	2036.5	2090.5
P1142	1.0	1.0	1.0	2032.6	2036.6	2090.6
P1230	0.0	0.0	0.0	0.0	0.0	0.0

P1477	0.0	0.0	0.0	0.0	0.0	0.0
P1501	0.0	0.0	0.0	0.0	0.0	0.0

P2103	722.2	722.2	722.2	722.2	722.2	722.2
P2104	0.0	0.0	0.0	2032.7	2036.7	2090.7
P2106	1.0	1.0	1.0	1.0	1.0	1.0

P2200	0.0	0.0	0.0	0.0	0.0	0.0
P2220	0.0	0.0	0.0	0.0	0.0	0.0
P2221	0.0	0.0	0.0	0.0	0.0	0.0
P2222	0.0	0.0	0.0	0.0	0.0	0.0
P2223	722.3	722.3	722.3	722.3	722.3	722.3
P2226	722.4	722.4	722.4	722.4	722.4	722.4
P2228	722.5	722.5	722.5	722.5	722.5	722.5
P2235	19.13	19.13	19.13	2032.13	2036.13	2090.13
P2236	19.14	19.14	19.14	2032.14	2036.14	2090.14

The following parameters are not overwritten when changing P0700:

P0810	P0811	P0820	P0821	P2810	P2812	P2814
P2816	P2818	P2820	P2822	P2824	P2826	P2828
P2830	P2832	P2834	P2837	P2840	P2843	P2846
P2849	P2854	P2859	P2864			

3.9 Digital inputs

P0701[3]	Function of digital input 1			Min: 0	Level
	CStat: CT	Datatype: U16	Unit: -	Def: 1	2
	P-Group: COMMANDS	Active: first confirm	QuickComm.: No	Max: 99	

Selects function of digital input 1.

DIN channel (e.g. DIN1 - PNP (P0725 = 1))

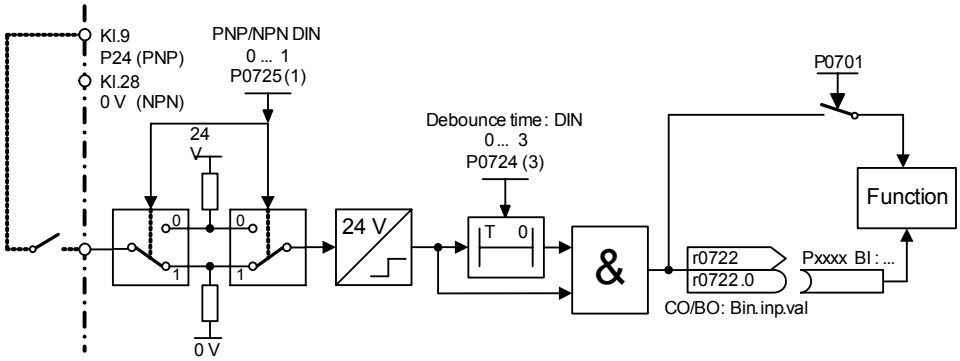

Possible Settings:

0 Digital input disabled
1 ON/OFF1
2 ON reverse /OFF1
3 OFF2 - coast to standstill
4 OFF3 - quick ramp-down
9 Fault acknowledge
10 JOG right
11 JOG left
12 Reverse
13 MOP up (increase frequency)
14 MOP down (decrease frequency)
15 Fixed setpoint (Direct selection)
16 Fixed setpoint (Direct selection + ON)
17 Fixed setpoint (Binary coded selection + ON)
25 DC brake enable
29 External trip
33 Disable additional freq setpoint
99 Enable BICO parameterization

Index:

P0701[0] : 1st. Command data set (CDS)
P0701[1] : 2nd. Command data set (CDS)
P0701[2] : 3rd. Command data set (CDS)

Dependency:

Setting 99 (enable BICO parameterization) requires
- P0700 command source or
- P0010 = 1, P3900 = 1, 2 or 3 quick commissioning or
- P0010 = 30, P0970 = 1 factory reset in order to reset.

Notice:

Setting 99 (BICO) for expert use only.

P0702[3]	Function of digital input 2			Min: 0	Level
	CStat: CT	Datatype: U16	Unit: -	Def: 12	2
	P-Group: COMMANDS	Active: first confirm	QuickComm.: No	Max: 99	

Selects function of digital input 2.

Possible Settings:

0 Digital input disabled
1 ON/OFF1
2 ON reverse /OFF1
3 OFF2 - coast to standstill
4 OFF3 - quick ramp-down
9 Fault acknowledge
10 JOG right
11 JOG left
12 Reverse
13 MOP up (increase frequency)
14 MOP down (decrease frequency)
15 Fixed setpoint (Direct selection)
16 Fixed setpoint (Direct selection + ON)
17 Fixed setpoint (Binary coded selection + ON)
25 DC brake enable
29 External trip
33 Disable additional freq setpoint
99 Enable BICO parameterization

Index:

P0702[0] : 1st. Command data set (CDS)
P0702[1] : 2nd. Command data set (CDS)
P0702[2] : 3rd. Command data set (CDS)

Details:

See P0701 (function of digital input1).

P0703[3]	Function of digital input 3			Min: 0	Level
	CStat: CT	Datatype: U16	Unit: -	Def: 9	2
	P-Group: COMMANDS	Active: first confirm	QuickComm.: No	Max: 99	

Selects function of digital input 3.

Possible Settings:

0 Digital input disabled
1 ON/OFF1
2 ON reverse /OFF1
3 OFF2 - coast to standstill
4 OFF3 - quick ramp-down
9 Fault acknowledge
10 JOG right
11 JOG left
12 Reverse
13 MOP up (increase frequency)
14 MOP down (decrease frequency)
15 Fixed setpoint (Direct selection)
16 Fixed setpoint (Direct selection + ON)
17 Fixed setpoint (Binary coded selection + ON)
25 DC brake enable
29 External trip
33 Disable additional freq setpoint
99 Enable BICO parameterization

Index:

P0703[0] : 1st. Command data set (CDS)
P0703[1] : 2nd. Command data set (CDS)
P0703[2] : 3rd. Command data set (CDS)

Details:

See P0701 (function of digital input 1).

P0704[3]	**Function of digital input 4**			**Min:** 0	Level
	CStat: CT	**Datatype:** U16	**Unit:** -	**Def:** 15	**2**
	P-Group: COMMANDS	**Active:** first confirm	**QuickComm.:** No	**Max:** 99	

Selects function of digital input 4.

Possible Settings:

0 Digital input disabled
1 ON/OFF1
2 ON reverse /OFF1
3 OFF2 - coast to standstill
4 OFF3 - quick ramp-down
9 Fault acknowledge
10 JOG right
11 JOG left
12 Reverse
13 MOP up (increase frequency)
14 MOP down (decrease frequency)
15 Fixed setpoint (Direct selection)
16 Fixed setpoint (Direct selection + ON)
17 Fixed setpoint (Binary coded selection + ON)
25 DC brake enable
29 External trip
33 Disable additional freq setpoint
99 Enable BICO parameterization

Index:

P0704[0] : 1st. Command data set (CDS)
P0704[1] : 2nd. Command data set (CDS)
P0704[2] : 3rd. Command data set (CDS)

Details:

See P0701 (function of digital input 1).

P0705[3]	**Function of digital input 5**			**Min:** 0	Level
	CStat: CT	**Datatype:** U16	**Unit:** -	**Def:** 15	**2**
	P-Group: COMMANDS	**Active:** first confirm	**QuickComm.:** No	**Max:** 99	

Selects function of digital input 5.

Possible Settings:

0 Digital input disabled
1 ON/OFF1
2 ON reverse /OFF1
3 OFF2 - coast to standstill
4 OFF3 - quick ramp-down
9 Fault acknowledge
10 JOG right
11 JOG left
12 Reverse
13 MOP up (increase frequency)
14 MOP down (decrease frequency)
15 Fixed setpoint (Direct selection)
16 Fixed setpoint (Direct selection + ON)
25 DC brake enable
29 External trip
33 Disable additional freq setpoint
99 Enable BICO parameterization

Index:

P0705[0] : 1st. Command data set (CDS)
P0705[1] : 2nd. Command data set (CDS)
P0705[2] : 3rd. Command data set (CDS)

Details:

See P0701 (function of digital input 1).

P0706[3]	**Function of digital input 6**			**Min:** 0	Level
	CStat: CT	**Datatype:** U16	**Unit:** -	**Def:** 15	**2**
	P-Group: COMMANDS	**Active:** first confirm	**QuickComm.:** No	**Max:** 99	

Selects function of digital input 6.

Possible Settings:

0 Digital input disabled
1 ON/OFF1
2 ON reverse /OFF1
3 OFF2 - coast to standstill
4 OFF3 - quick ramp-down
9 Fault acknowledge
10 JOG right
11 JOG left
12 Reverse
13 MOP up (increase frequency)
14 MOP down (decrease frequency)
15 Fixed setpoint (Direct selection)
16 Fixed setpoint (Direct selection + ON)
25 DC brake enable
29 External trip
33 Disable additional freq setpoint
99 Enable BICO parameterization

Index:

P0706[0] : 1st. Command data set (CDS)
P0706[1] : 2nd. Command data set (CDS)
P0706[2] : 3rd. Command data set (CDS)

Details:

See P0701 (function of digital input 1).

P0707[3]	**Function of digital input 7**			**Min:** 0	Level
	CStat: CT	**Datatype:** U16	**Unit:** -	**Def:** 0	**2**
	P-Group: COMMANDS	**Active:** first confirm	**QuickComm.:** No	**Max:** 99	

Selects function of digital input 7 (via analog input).

Possible Settings:

0 Digital input disabled
1 ON/OFF1
2 ON reverse /OFF1
3 OFF2 - coast to standstill
4 OFF3 - quick ramp-down
9 Fault acknowledge
10 JOG right
11 JOG left
12 Reverse
13 MOP up (increase frequency)
14 MOP down (decrease frequency)
25 DC brake enable
29 External trip
33 Disable additional freq setpoint
99 Enable BICO parameterization

Index:

P0707[0] : 1st. Command data set (CDS)
P0707[1] : 2nd. Command data set (CDS)
P0707[2] : 3rd. Command data set (CDS)

Note:

Signals above 4 V are active, signals below 1,6 V are inactive.

Details:

See P0701 (function of digital input 1).

P0708[3]	**Function of digital input 8**			**Min:** 0	Level
	CStat: CT	**Datatype:** U16	**Unit:** -	**Def:** 0	**2**
	P-Group: COMMANDS	**Active:** first confirm	**QuickComm.:** No	**Max:** 99	

Selects function of digital input 8 (via analog input)

Possible Settings:

0 Digital input disabled
1 ON/OFF1
2 ON reverse /OFF1
3 OFF2 - coast to standstill
4 OFF3 - quick ramp-down
9 Fault acknowledge
10 JOG right
11 JOG left
12 Reverse
13 MOP up (increase frequency)
14 MOP down (decrease frequency)
25 DC brake enable
29 External trip
33 Disable additional freq setpoint
99 Enable BICO parameterization

Index:

P0708[0] : 1st. Command data set (CDS)
P0708[1] : 2nd. Command data set (CDS)
P0708[2] : 3rd. Command data set (CDS)

Note:

Signals above 4 V are active, signals below 1,6 V are inactive.

Details:

See P0701 (function of digital input 1).

P0719[3]	**Selection of cmd. & freq. setp.**			**Min:** 0	Level
	CStat: CT	**Datatype:** U16	**Unit:** -	**Def:** 0	**3**
	P-Group: COMMANDS	**Active:** first confirm	**QuickComm.:** No	**Max:** 67	

Central switch to select control command source for inverter.
Switches command and setpoint source between freely programmable BICO parameters and fixed command/setpoint profiles. Command and setpoint sources can be changed independently.

The tens digit chooses the command source and the units digit chooses the setpoint source.

Possible Settings:

0	Cmd = BICO parameter	Setpoint = BICO parameter
1	Cmd = BICO parameter	Setpoint = MOP setpoint
2	Cmd = BICO parameter	Setpoint = Analog setpoint
3	Cmd = BICO parameter	Setpoint = Fixed frequency
4	Cmd = BICO parameter	Setpoint = USS on BOP link
5	Cmd = BICO parameter	Setpoint = USS on COM link
6	Cmd = BICO parameter	Setpoint = CB on COM link
7	Cmd = BICO parameter	Setpoint = Analog 2 setp
10	Cmd = BOP	Setpoint = BICO parameter
11	Cmd = BOP	Setpoint = MOP setpoint
12	Cmd = BOP	Setpoint = Analog setpoint
13	Cmd = BOP	Setpoint = Fixed frequency
15	Cmd = BOP	Setpoint = USS on COM link
16	Cmd = BOP	Setpoint = CB on COM link
17	Cmd = BOP	Setpoint = Analog 2 setp
40	Cmd = USS on BOP link	Setpoint = BICO parameter
41	Cmd = USS on BOP link	Setpoint = MOP setpoint
42	Cmd = USS on BOP link	Setpoint = Analog setpoint
43	Cmd = USS on BOP link	Setpoint = Fixed frequency
44	Cmd = USS on BOP link	Setpoint = USS on BOP link
45	Cmd = USS on BOP link	Setpoint = USS on COM link
46	Cmd = USS on BOP link	Setpoint = CB on COM link
47	Cmd = USS on BOP link	Setpoint = Analog 2 setp
50	Cmd = USS on COM link	Setpoint = BICO parameter
51	Cmd = USS on COM link	Setpoint = MOP setpoint
52	Cmd = USS on COM link	Setpoint = Analog setpoint
53	Cmd = USS on COM link	Setpoint = Fixed frequency
54	Cmd = USS on COM link	Setpoint = USS on BOP link
55	Cmd = USS on COM link	Setpoint = USS on COM link
57	Cmd = USS on COM link	Setpoint = Analog 2 setp
60	Cmd = CB on COM link	Setpoint = BICO parameter
61	Cmd = CB on COM link	Setpoint = MOP setpoint
62	Cmd = CB on COM link	Setpoint = Analog setpoint
63	Cmd = CB on COM link	Setpoint = Fixed frequency
64	Cmd = CB on COM link	Setpoint = USS on BOP link
66	Cmd = CB on COM link	Setpoint = CB on COM link
67	Cmd = CB on COM link	Setpoint = Analog 2 setp

Index:

P0719[0] : 1st. Command data set (CDS)
P0719[1] : 2nd. Command data set (CDS)
P0719[2] : 3rd. Command data set (CDS)

Note:

Using parameter P0719, it is possible to select the command or setpoint sources without changing the BICO connections (this is contrary to P0700 / P1000). However, it is not possible to change the complete connection table (refer to P0700 and P1000). Using P0719, depending on the value, only the BICO parameters listed in the following table are internally overwritten - this means that these BICO parameters are inactive.

Command source:

	P0719 =				
	0 ... 9	10 ... 19	40 ... 49	50 ... 59	60 ... 69
P0840	X	–	–	–	–
P0844	X	–	–	–	–
P0848	X	X	–	–	–
P0852	X	X	–	–	–
P1035	X	–	–	–	–
P1036	X	X	–	–	–
P1055	X	–	–	–	–
P1056	X	X	–	–	–
P1113	X	–	–	–	–
P1140	X	X	–	–	–
P1141	X	X	–	–	–
P1142	X	X	–	–	–
P1143	X	X	–	–	–

Setpoint source

	P0719 =	
	0, 10, 20, 40, 50, 60	all other values
P1070	X	–

X = BICO parameter active

– = BICO parameter inactive

BICO connections made previously remain unchanged.

r0720 Number of digital inputs

Datatype: U16 **Unit:** - **Min:** - **Def:** - **Max:** -

P-Group: COMMANDS

Level **3**

Displays number of digital inputs.

r0722 CO/BO: Binary input values

Datatype: U16 **Unit:** - **Min:** - **Def:** - **Max:** -

P-Group: COMMANDS

Level **2**

Displays status of digital inputs.

Bitfields:

```
Bit00   Digital input 1                    0  OFF     1  ON
Bit01   Digital input 2                    0  OFF     1  ON
Bit02   Digital input 3                    0  OFF     1  ON
Bit03   Digital input 4                    0  OFF     1  ON

Bit04   Digital input 5                    0  OFF     1  ON
Bit05   Digital input 6                    0  OFF     1  ON
Bit06   Digital input 7 (via ADC 1)        0  OFF     1  ON
Bit07   Digital input 8 (via ADC 2)        0  OFF     1  ON
```

Note:

Segment is lit when signal is active.

P0724	**Debounce time for digital inputs**			**Min:** 0	Level
	CStat: CT	**Datatype:** U16	**Unit:** -	**Def:** 3	**3**
	P-Group: COMMANDS	**Active:** Immediately	**QuickComm.:** No	**Max:** 3	

Defines debounce time (filtering time) used for digital inputs.

Possible Settings:

0 No debounce time
1 2.5 ms debounce time
2 8.2 ms debounce time
3 12.3 ms debounce time

P0725	**PNP / NPN digital inputs**			**Min:** 0	Level
	CStat: CT	**Datatype:** U16	**Unit:** -	**Def:** 1	**3**
	P-Group: COMMANDS	**Active:** Immediately	**QuickComm.:** No	**Max:** 1	

Switches between active high (PNP) and active low (NPN). This is valid for all digital inputs simultaneously.

The following is valid by using the internal supply:

Possible Settings:

0 NPN mode ==> low active
1 PNP mode ==> high active

Value:

NPN: Terminals 5/6/7/8/16/17 must be connected via terminal 28 (O V).
PNP: Terminals 5/6/7/8/16/17 must be connected via terminal 9 (24 V).

3.10 Digital outputs

r0730	**Number of digital outputs**			**Min:** -	Level
		Datatype: U16	**Unit:** -	**Def:** -	**3**
	P-Group: COMMANDS			**Max:** -	

Displays number of digital outputs (relays).

P0731[3]	**BI: Function of digital output 1**			**Min:** 0:0	Level
	CStat: CUT	**Datatype:** U32	**Unit:** -	**Def:** 52:3	**2**
	P-Group: COMMANDS	**Active:** first confirm	**QuickComm.:** No	**Max:** 4000:0	

Defines source of digital output 1.

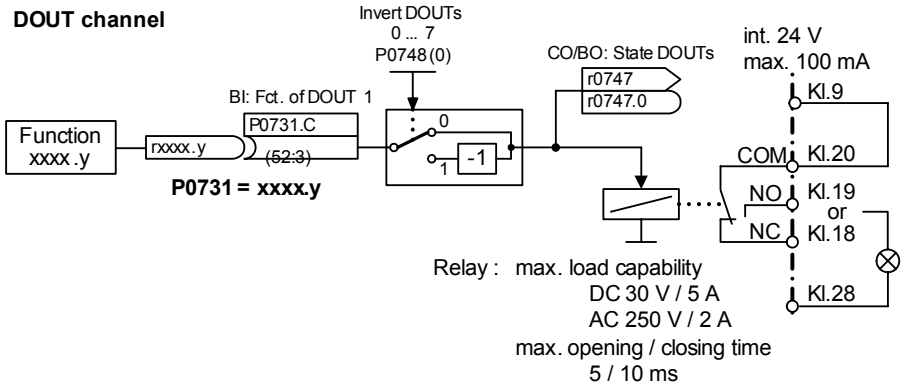

Index:

P0731[0] : 1st. Command data set (CDS)
P0731[1] : 2nd. Command data set (CDS)
P0731[2] : 3rd. Command data set (CDS)

Common Settings:

52.0	Drive ready	0	Closed
52.1	Drive ready to run	0	Closed
52.2	Drive running	0	Closed
52.3	Drive fault active	0	Closed
52.4	OFF2 active	1	Closed
52.5	OFF3 active	1	Closed
52.6	Switch on inhibit active	0	Closed
52.7	Drive warning active	0	Closed
52.8	Deviation setpoint/actual value	1	Closed
52.9	PZD control (Process Data Control)	0	Closed
52.A	Maximum frequency reached	0	Closed
52.B	Warning: Motor current limit	1	Closed
52.C	Motor holding brake (MHB) active	0	Closed
52.D	Motor overload	1	Closed
52.E	Motor running direction right	0	Closed
52.F	Inverter overload	1	Closed
53.0	DC brake active	0	Closed
53.1	Act. freq. f_act > P2167 (f_off)	0	Closed
53.2	Act. freq. f_act <= P1080 (f_min)	0	Closed
53.3	Act. current r0027 > P2170	0	Closed
53.4	Act. freq. f_act > P2155 (f_1)	0	Closed
53.5	Act. freq. f_act <= P2155 (f_1)	0	Closed
53.6	Act. freq. f_act >= setpoint	0	Closed
53.7	Act. Vdc r0026 < P2172	0	Closed
53.8	Act. Vdc r0026 > P2172	0	Closed
53.A	PID output r2294 == P2292 (PID_min)	0	Closed
53.B	PID output r2294 == P2291 (PID_max)	0	Closed

Details:

Display functions ==> see parameter r0052, r0053
Motor holding brake ==> see parameter P1215
DC brake ==> see parameter P1232, P1233

P0732[3]	**BI: Function of digital output 2**			**Min:** 0:0	Level
	CStat: CUT	**Datatype:** U32	**Unit:** -	**Def:** 52:7	**2**
	P-Group: COMMANDS	**Active:** first confirm	**QuickComm.:** No	**Max:** 4000:0	

Defines source of digital output 2.

Index:

P0732[0] : 1st. Command data set (CDS)
P0732[1] : 2nd. Command data set (CDS)
P0732[2] : 3rd. Command data set (CDS)

Common Settings:

52.0	Drive ready	0	Closed
52.1	Drive ready to run	0	Closed
52.2	Drive running	0	Closed
52.3	Drive fault active	0	Closed
52.4	OFF2 active	1	Closed
52.5	OFF3 active	1	Closed
52.6	Switch on inhibit active	0	Closed
52.7	Drive warning active	0	Closed
52.8	Deviation setpoint/actual value	1	Closed
52.9	PZD control (Process Data Control)	0	Closed
52.A	Maximum frequency reached	0	Closed
52.B	Warning: Motor current limit	1	Closed
52.C	Motor holding brake (MHB) active	0	Closed
52.D	Motor overload	1	Closed
52.E	Motor running direction right	0	Closed
52.F	Inverter overload	1	Closed
53.0	DC brake active	0	Closed
53.1	Act. freq. f_act > P2167 (f_off)	0	Closed
53.2	Act. freq. f_act <= P1080 (f_min)	0	Closed
53.3	Act. current r0027 > P2170	0	Closed
53.4	Act. freq. f_act > P2155 (f_1)	0	Closed
53.5	Act. freq. f_act <= P2155 (f_1)	0	Closed
53.6	Act. freq. f_act >= setpoint	0	Closed
53.7	Act. Vdc r0026 < P2172	0	Closed
53.8	Act. Vdc r0026 > P2172	0	Closed
53.A	PID output r2294 == P2292 (PID_min)	0	Closed
53.B	PID output r2294 == P2291 (PID_max)	0	Closed

P0733[3]	**BI: Function of digital output 3**			**Min:** 0:0	Level
	CStat: CUT	**Datatype:** U32	**Unit:** -	**Def:** 0:0	**2**
	P-Group: COMMANDS	**Active:** first confirm	**QuickComm.:** No	**Max:** 4000:0	

Defines source of digital output 3.

Index:

P0733[0] : 1st. Command data set (CDS)
P0733[1] : 2nd. Command data set (CDS)
P0733[2] : 3rd. Command data set (CDS)

Common Settings:

52.0	Drive ready	0	Closed
52.1	Drive ready to run	0	Closed
52.2	Drive running	0	Closed
52.3	Drive fault active	0	Closed
52.4	OFF2 active	1	Closed
52.5	OFF3 active	1	Closed
52.6	Switch on inhibit active	0	Closed
52.7	Drive warning active	0	Closed
52.8	Deviation setpoint/actual value	1	Closed
52.9	PZD control (Process Data Control)	0	Closed
52.A	Maximum frequency reached	0	Closed
52.B	Warning: Motor current limit	1	Closed
52.C	Motor holding brake (MHB) active	0	Closed
52.D	Motor overload	1	Closed
52.E	Motor running direction right	0	Closed
52.F	Inverter overload	1	Closed
53.0	DC brake active	0	Closed
53.1	Act. freq. f_act > P2167 (f_off)	0	Closed
53.2	Act. freq. f_act <= P1080 (f_min)	0	Closed
53.3	Act. current r0027 > P2170	0	Closed
53.4	Act. freq. f_act > P2155 (f_1)	0	Closed
53.5	Act. freq. f_act <= P2155 (f_1)	0	Closed
53.6	Act. freq. f_act >= setpoint	0	Closed
53.7	Act. Vdc r0026 < P2172	0	Closed
53.8	Act. Vdc r0026 > P2172	0	Closed
53.A	PID output r2294 == P2292 (PID_min)	0	Closed
53.B	PID output r2294 == P2291 (PID_max)	0	Closed

r0747	**CO/BO: State of digital outputs**			**Min:** -	Level
		Datatype: U16	**Unit:** -	**Def:** -	**3**
	P-Group: COMMANDS			**Max:** -	

Displays status of digital outputs (also includes inversion of digital outputs via P0748).

Bitfields:

```
Bit00   Digital output 1 energized          0  NO      1  YES
Bit01   Digital output 2 energized          0  NO      1  YES
Bit02   Digital output 3 energized          0  NO      1  YES
```

Dependency:

Bit 0 = 0 :
Relay de-energized / contacts open

Bit 0 = 1 :
Relay energized / contacts closed

P0748	**Invert digital outputs**			**Min:** 0	Level
	CStat: CUT	**Datatype:** U16	**Unit:** -	**Def:** 0	**3**
	P-Group: COMMANDS	**Active:** first confirm	**QuickComm.:** No	**Max:** 7	

Defines high and low states of relay for a given function.

Bitfields:

```
Bit00   Invert digital output 1             0  NO      1  YES
Bit01   Invert digital output 2             0  NO      1  YES
Bit02   Invert digital output 3             0  NO      1  YES
```

3.11 Analog inputs

r0750	**Number of ADCs**			**Min:** -	Level
		Datatype: U16	**Unit:** -	**Def:** -	**3**
	P-Group: TERMINAL			**Max:** -	

Displays number of analog inputs available.

r0751	**BO: Status word of ADC**			**Min:** -	Level
		Datatype: U16	**Unit:** -	**Def:** -	**4**
	P-Group: TERMINAL			**Max:** -	

Displays status of analog input.

Bitfields:

```
Bit00   Signal lost on ADC 1                0  NO      1  YES
Bit01   Signal lost on ADC 2                0  NO      1  YES
```

Dependency:

The following limitations/secondary conditions apply for the wire breakage monitoring:

- For P0756, the monitoring must be activated
- Width of the ADC deadzone P0761 > 0
- Wire breakage / signal loss F0080 is detected if the ADC input quantity is less than 0.5 * P0761.

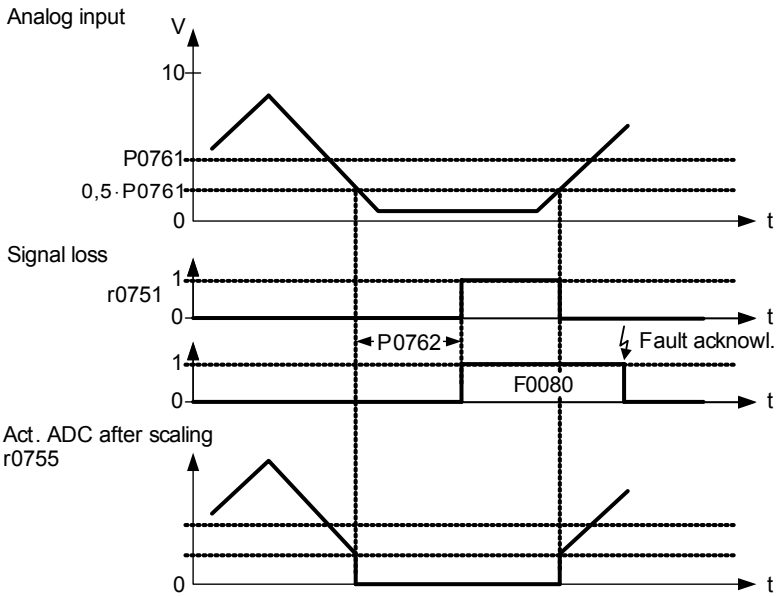

r0752[2]	**Act. input of ADC [V] or [mA]**			**Min:** -	Level
		Datatype: Float	**Unit:** -	**Def:** -	**2**
	P-Group: TERMINAL			**Max:** -	

Displays smoothed analog input value in volts before the characteristic block.

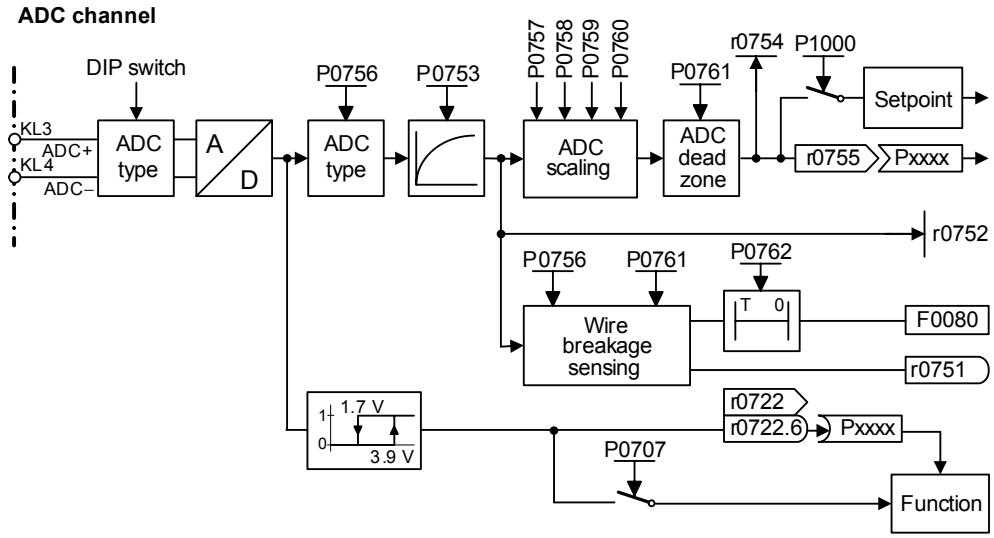

Index:

r0752[0] : Analog input 1 (ADC 1)
r0752[1] : Analog input 2 (ADC 2)

P0753[2]	**Smooth time ADC**			**Min:** 0	Level
	CStat: CUT	**Datatype:** U16	**Unit:** ms	**Def:** 3	**3**
	P-Group: TERMINAL	**Active:** first confirm	**QuickComm.:** No	**Max:** 10000	

Defines filter time (PT1 filter) in [ms] for analog input.

Index:

P0753[0] : Analog input 1 (ADC 1)
P0753[1] : Analog input 2 (ADC 2)

Note:

Increasing this time (smooth) reduces jitter but slows down response to the analog input.

P0753 = 0 : No filtering

r0754[2]	**Act. ADC value after scaling [%]**			**Min:** -	Level
		Datatype: Float	**Unit:** %	**Def:** -	**2**
	P-Group: TERMINAL			**Max:** -	

Shows smoothed value of analog input in [%] after scaling block.

Index:

r0754[0] : Analog input 1 (ADC 1)
r0754[1] : Analog input 2 (ADC 2)

Dependency:

P0757 to P0760 define range (ADC scaling).

r0755[2]	**CO: Act. ADC after scal. [4000h]**			**Min:** -	Level
		Datatype: I16	**Unit:** -	**Def:** -	**2**
	P-Group: TERMINAL			**Max:** -	

Displays analog input, scaled using ASPmin and ASPmax.

Analog setpoint (ASP) from the analog scaling block can vary from min. analog setpoint (ASPmin) to a max. analog setpoint (ASPmax) as shown in P0757 (ADC scaling).

The largest magnitude (value without sign) of ASPmin and ASPmax defines the scaling of 16384.

By associating parameter r0755 with an internal value (e.g. frequency setpoint), a scaled value is calculated internally by the MM4. The frequency value is calculated using the following equation:

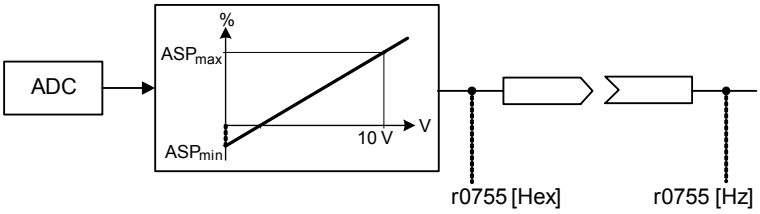

$$r0755[Hz] = \frac{r0755[Hex]}{4000[Hex]} \cdot P2000 \cdot \frac{\max(|ASPmax|, |ASPmin|)}{100\%}$$

Index:

r0755[0] : Analog input 1 (ADC 1)
r0755[1] : Analog input 2 (ADC 2)

Example:

Case a:
- ASPmin = 300 %, ASPmax = 100 % then 16384 represents 300 %.
- This parameter will vary from 5461 to 16384.

Case b:
- ASPmin = -200 %, ASPmax = 100 % then 16384 represents 200 %.
- This parameter will vary from -16384 to +8192.

$$4000h = \max(|ASPmax|, |ASPmin|)$$

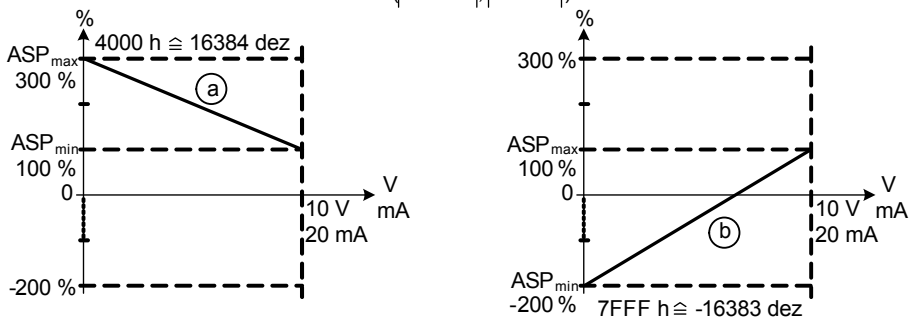

Note:
- This value is used as an input to analog BICO connectors.
- ASPmax represents the highest analog setpoint (this may be at 10 V).
- ASPmin represents the lowest analog setpoint (this may be at 0 V).

Details:

See parameters P0757 to P0760 (ADC scaling)

P0756[2]	**Type of ADC**			**Min:** 0	Level
	CStat: CT	**Datatype:** U16	**Unit:** -	**Def:** 0	**2**
	P-Group: TERMINAL	**Active:** first confirm	**QuickComm.:** No	**Max:** 4	

Defines type of analog input and also enables analog input monitoring.

To switch over from voltage to current analog input it is not sufficient to merely modify parameter P0756. Rather, the DIPs on the terminal board must also be set to the correct position. The DIP settings are as follows:
- OFF = voltage input (10 V)
- ON = current input (20 mA)

Allocation of DIPs to analog inputs is as follows:
- DIP on left (DIP 1) = Analog input 1
- DIP on right (DIP 2) = Analog input 2

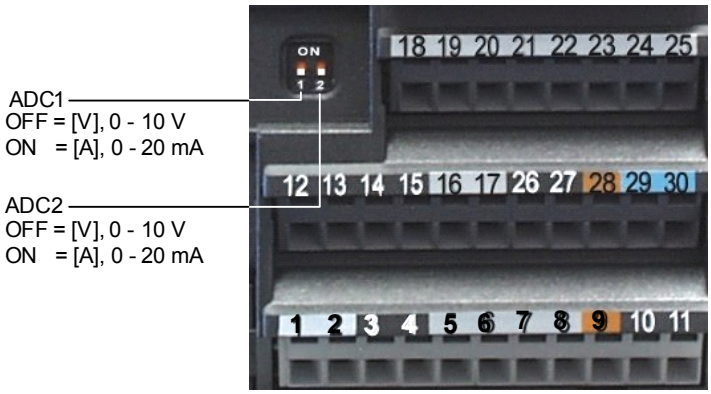

Possible Settings:

0 Unipolar voltage input (0 to +10 V)
1 Unipolar voltage input with monitoring (0 to 10 V)
2 Unipolar current input (0 to 20 mA)
3 Unipolar current input with monitoring (0 to 20 mA)
4 Bipolar voltage input (-10 V to +10 V)

Index:

P0756[0] : Analog input 1 (ADC 1)
P0756[1] : Analog input 2 (ADC 2)

Notice:

When monitoring is enabled and a deadband defined (P0761), a fault condition will be generated (F0080) if the analog input voltage falls below 50 % of the deadband voltage.

On account of h/w restirction it is not possible to select the bipolar voltage (see Enum declaration) for analog input 2 (P0756[1] = 4).

Details:

See P0757 to P0760 (ADC scaling).

P0757[2]	**Value x1 of ADC scaling [V / mA]**			**Min:** -20	Level
	CStat: CUT	**Datatype:** Float	**Unit:** -	**Def:** 0	**2**
	P-Group: TERMINAL	**Active:** first confirm	**QuickComm.:** No	**Max:** 20	

Parameters P0757 - P0760 configure the input scaling as shown in the diagram:

P0756 = 0 ... 3, P0761 = 0

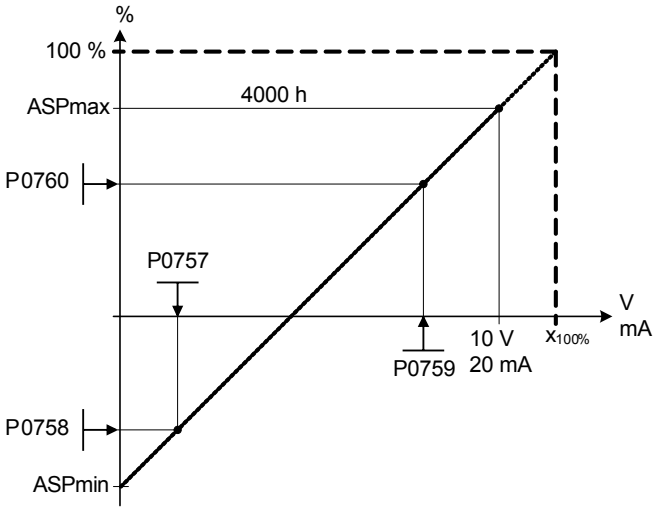

Where:

- Analog setpoints represent a [%] of the normalized frequency in P2000.
- Analog setpoints may be larger than 100 %.
- ASPmax represents highest analog setpoint (this may be at 10 V or 20 mA).
- ASPmin represents lowest analog setpoint (this may be at 0 V or 20 mA).
- Default values provide a scaling of 0 V or 0 mA = 0 %, and 10 V or 20 mA = 100 %.

P0756 = 4, P0761 = 0

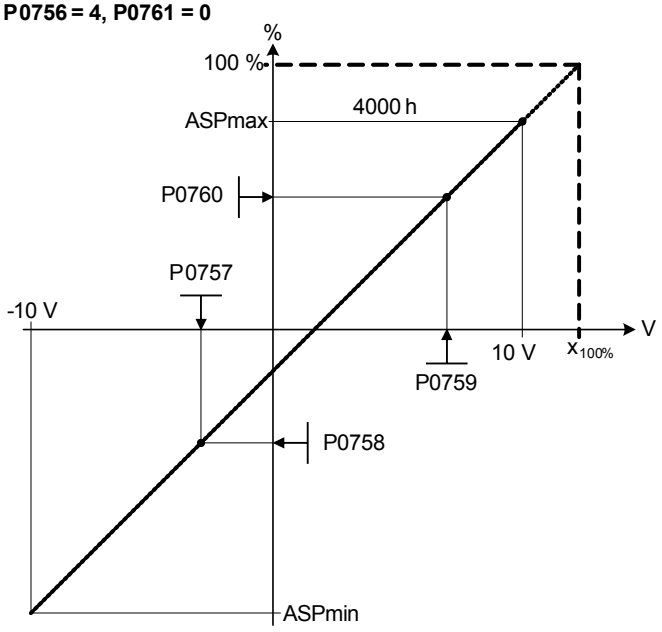

Index:

P0757[0] : Analog input 1 (ADC 1)
P0757[1] : Analog input 2 (ADC 2)

Note:

The ADC-linear characteristic is described by 4 coordinates, based on a two-point equation:

$$\frac{y - P0758}{x - P0757} = \frac{P0760 - P0758}{P0759 - P0757}$$

For calculations the point-gradient form (offset and gradient) is more advantageous:

$$y = m \cdot x + y_0$$

The transformation between these two forms is given by:

$$m = \frac{P0760 - P0758}{P0759 - P0757} \qquad y_0 = \frac{P0758 \cdot P0759 - P0757 \cdot P0760}{P0759 - P0757}$$

For scaling of the input the value of y_max and x_min has to be determined. This is done by the following equations:

$$x_{min} = \frac{P0760 \cdot P0757 - P0758 \cdot P0759}{P0760 - P0758}$$

$$y_{max} = (x_{max} - x_{min}) \cdot \frac{P0760 - P0758}{P0759 - P0757}$$

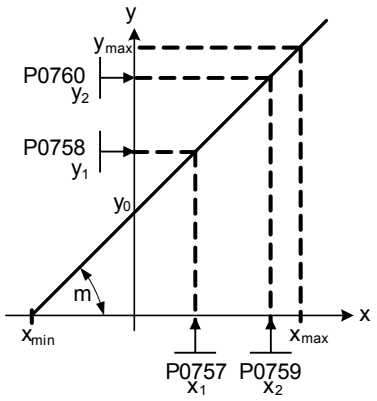

Notice:

The value x2 of ADC scaling P0759 must be greater than the value x1 of ADC scaling P0757.

P0758[2]	**Value y1 of ADC scaling**				**Min:** -99999.9	Level
	CStat: CUT	**Datatype:** Float	**Unit:** %		**Def:** 0.0	**2**
	P-Group: TERMINAL	**Active:** first confirm	**QuickComm.:** No		**Max:** 99999.9	

Sets value of Y1 in [%] as described in P0757 (ADC scaling)

Index:

P0758[0] : Analog input 1 (ADC 1)
P0758[1] : Analog input 2 (ADC 2)

Dependency:

Affects P2000 to P2003 (reference frequency, voltage, current or torque) depending on which setpoint is to be generated.

P0759[2]	**Value x2 of ADC scaling [V / mA]**			**Min:** -20	Level
	CStat: CUT	**Datatype:** Float	**Unit:** -	**Def:** 10	**2**
	P-Group: TERMINAL	**Active:** first confirm	**QuickComm.:** No	**Max:** 20	

Sets value of X2 as described in P0757 (ADC scaling).

Index:

P0759[0] : Analog input 1 (ADC 1)
P0759[1] : Analog input 2 (ADC 2)

Notice:

The value x2 of ADC scaling P0759 must be greater than the value x1 of ADC scaling P0757.

P0760[2]	**Value y2 of ADC scaling**			**Min:** -99999.9	Level
	CStat: CUT	**Datatype:** Float	**Unit:** %	**Def:** 100.0	**2**
	P-Group: TERMINAL	**Active:** first confirm	**QuickComm.:** No	**Max:** 99999.9	

Sets value of Y2 in [%] as described in P0757 (ADC scaling).

Index:

P0760[0] : Analog input 1 (ADC 1)
P0760[1] : Analog input 2 (ADC 2)

Dependency:

Affects P2000 to P2003 (reference frequency, voltage, current or torque) depending on which setpoint is to be generated.

P0761[2]	**Width of ADC deadband [V / mA]**			**Min:** 0	Level
	CStat: CUT	**Datatype:** Float	**Unit:** -	**Def:** 0	**2**
	P-Group: TERMINAL	**Active:** first confirm	**QuickComm.:** No	**Max:** 20	

Defines width of deadband on analog input. The diagrams below explain its use.

Index:

P0761[0] : Analog input 1 (ADC 1)
P0761[1] : Analog input 2 (ADC 2)

Example:

The below example produces a 2 to 10 V analog input 0 to 50 Hz (ADC value 2 to 10 V, 0 to 50 Hz):

- P2000 = 50 Hz
- P0759 = 8 V P0760 = 75 %
- P0757 = 2 V P0758 = 0 %
- P0761 = 2 V
- P0756 = 0 or 1

P0761 > 0 and (0 < P0758 < P0760 or 0 > P0758 > P0760)

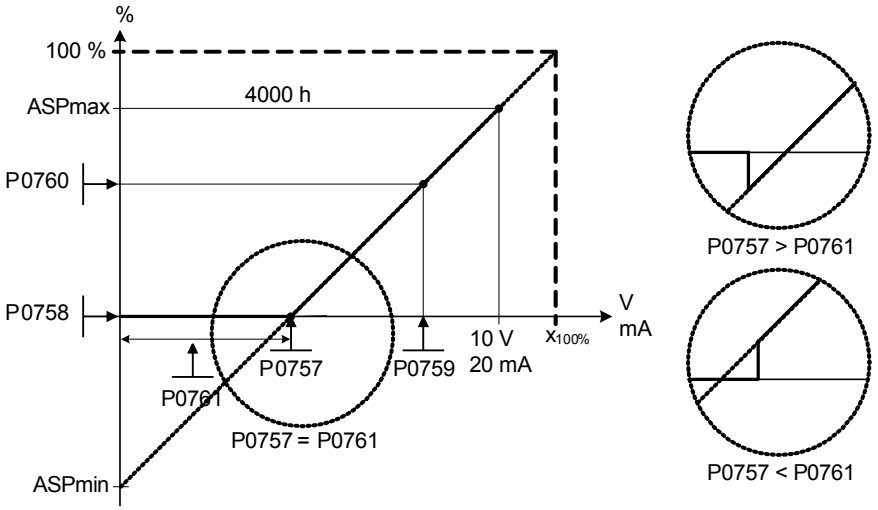

The below example produces a 0 to 10 V analog input (-50 to +50 Hz) with center zero and a "holding point" 0.2 V wide (0.1 V to each side of center, ADC value 0 to 10 V, -50 to +50 Hz):

- P2000 = 50 Hz
- P0759 = 8 V P0760 = 75 %
- P0757 = 2 V P0758 = -75 %
- P0761 = 0.1 V
- P0756 = 0 or 1

P0761 > 0 and P0758 < 0 < P0760

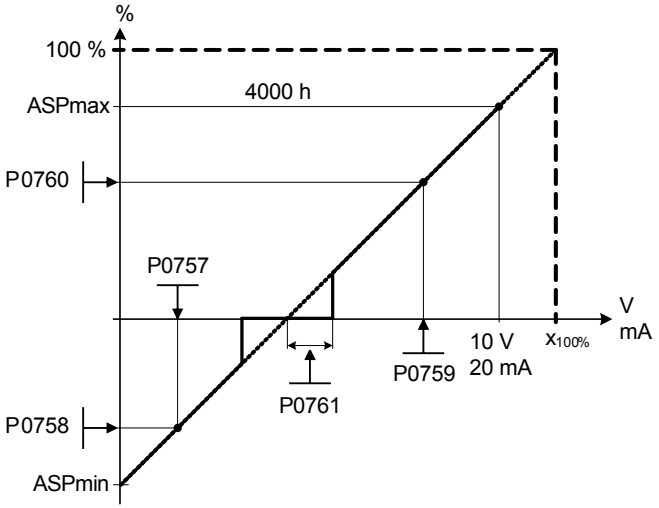

The below example produces a -10 to +10 V analog input (-50 to +50 Hz) with center zero and a "holding point" 0.2 V wide (0.1 V to each side of center).

P0756 = 4 and P0761 > 0 and P0758 < 0 < P0760

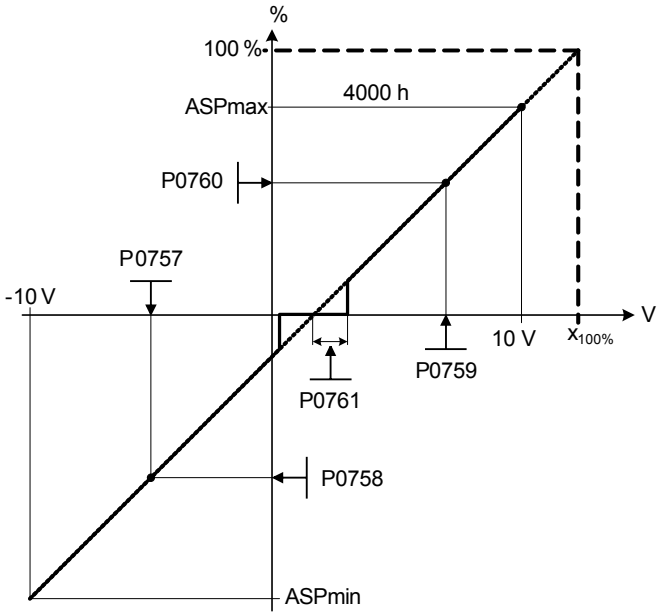

Note:

P0761[x] = 0 : No deadband active.

Deadband starts from 0 V to value of P0761, if both values of P0758 and P0760 (y coordinates of ADC scaling) are positive or negative respectively. However, deadband is active in both directions from point of intersection (x axis with ADC scaling curve), if sign of P0758 and P0760 are opposite.

Min. frequency P1080 should be zero when using center zero setup. There is no hysteresis at the end of the deadband.

P0762[2]	**Delay for loss of signal action**			**Min:** 0	Level
	CStat: CUT	**Datatype:** U16	**Unit:** ms	**Def:** 10	**3**
	P-Group: TERMINAL	**Active:** Immediately	**QuickComm.:** No	**Max:** 10000	

Defines time delay between loss of analog setpoint and appearance of fault code F0080.

Index:

P0762[0] : Analog input 1 (ADC 1)
P0762[1] : Analog input 2 (ADC 2)

Note:

Expert users can choose the desired reaction to F0080 (default is OFF2).

3.12 Analog outputs

r0770	Number of DACs			Min: -	Level
		Datatype: U16	Unit: -	Def: -	3
	P-Group: TERMINAL			Max: -	

Displays number of analog outputs available.

P0771[2]	CI: DAC			Min: 0:0	Level
	CStat: CUT	Datatype: U32	Unit: -	Def: 21:0	2
	P-Group: TERMINAL	Active: first confirm	QuickComm.: No	Max: 4000:0	

Defines function of the 0 - 20 mA analog output.

Index:

P0771[0] : Analog output 1 (DAC 1)
P0771[1] : Analog output 2 (DAC 2)

Common Settings:

21 CO: Act. frequency (scaled to P2000)
24 CO: Act. output frequency (scaled to P2000)
25 CO: Act. output voltage (scaled to P2001)
26 CO: Act. filtered DC-link volt. (scaled to P2001)
27 CO: Act. output current (scaled to P2002)

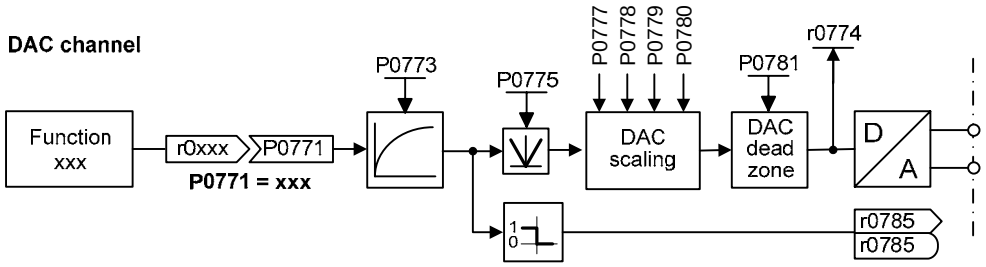

P0773[2]	Smooth time DAC			Min: 0	Level
	CStat: CUT	Datatype: U16	Unit: ms	Def: 2	2
	P-Group: TERMINAL	Active: first confirm	QuickComm.: No	Max: 1000	

Defines smoothing time [ms] for analog output signal. This parameter enables smoothing for DAC using a PT1 filter.

Index:

P0773[0] : Analog output 1 (DAC 1)
P0773[1] : Analog output 2 (DAC 2)

Dependency:

P0773 = 0: Deactivates filter.

r0774[2]	Act. DAC value [mA]			Min: -	Level
		Datatype: Float	Unit: -	Def: -	2
	P-Group: TERMINAL			Max: -	

Shows value of analog output in [mA] after filtering and scaling.

Index:

r0774[0] : Analog output 1 (DAC 1)
r0774[1] : Analog output 2 (DAC 2)

P0775[2]	Permit absolute value			Min: 0	Level
	CStat: CT	Datatype: U16	Unit: -	Def: 0	2
	P-Group: TERMINAL	Active: first confirm	QuickComm.: No	Max: 1	

Decides if the absolute value of the analog output is used. If enabled, this parameter will take the absolute value of the value to be outputed. If the value was originally negative then the corresponding bit in R0783 is set, otherwise it is cleared.

Possible Settings:

0 OFF
1 ON

Index:

P0775[0] : Analog output 1 (DAC 1)
P0775[1] : Analog output 2 (DAC 2)

P0776[2]	**Type of DAC**			**Min:** 0	Level
	CStat: CT	**Datatype:** U16	**Unit:** -	**Def:** 0	**2**
	P-Group: TERMINAL	**Active:** first confirm	**QuickComm.:** No	**Max:** 1	

Defines type of analog output.

Possible Settings:

0 Current output
1 Voltage output

Index:

P0776[0] : Analog output 1 (DAC 1)
P0776[1] : Analog output 2 (DAC 2)

Note:

The analog output is designed as a current output with a range of 0...20 mA.

For a voltage output with a range of 0...10 V an external resistor of 500 Ohms has to be connected at the terminals (12/13 or 26/27).

P0777[2]	**Value x1 of DAC scaling**			**Min:** -99999.0	Level
	CStat: CUT	**Datatype:** Float	**Unit:** %	**Def:** 0.0	**2**
	P-Group: TERMINAL	**Active:** first confirm	**QuickComm.:** No	**Max:** 99999.0	

Defines x1 output characteristic in [%]. Scaling block is responsible for adjustment of output value defined in P0771 (DAC connector input).

Parameters of DAC scaling block (P0777 ... P0781) work as follows:

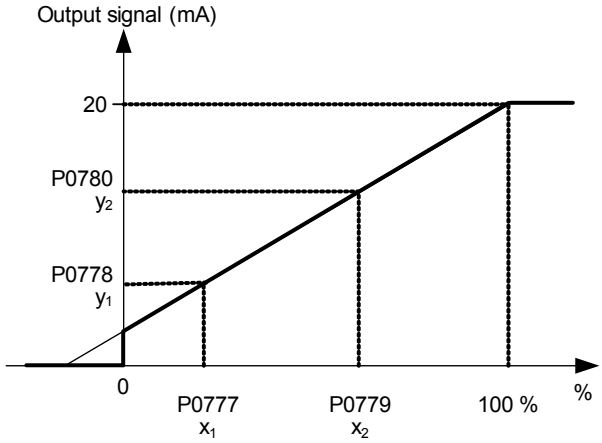

Where:
Points P1 (x1, y1) and P2 (x2, y2) can be chosen freely.

Index:

P0777[0] : Analog output 1 (DAC 1)
P0777[1] : Analog output 2 (DAC 2)

Example:

The default values of the scaling block provides a scaling of:
P1: 0.0 % = 0 mA
P2: 100.0 % = 20 mA

Dependency:

Affects P2000 to P2003 (referency frequency, voltage, current or torque) depending on which setpoint is to be generated.

Note:

The DAC-linear characteristic is described by 4 coordinates, based on a two-point equation:

$$\frac{y - P0778}{x - P0777} = \frac{P0780 - P0778}{P0779 - P0777}$$

For calculations the point-gradient form (offset and gradient) is more advantageous:

$$y = m \cdot x + y_0$$

The transformation between these two forms is given by:

$$m = \frac{P0780 - P0778}{P0779 - P0777} \qquad y_0 = \frac{P0778 \cdot P0779 - P0777 \cdot P0780}{P0779 - P0777} \leq \left| 200\,\% \right|$$

For scaling of the input the value of y_max and x_min has to be determined. This is done by the following equations:

$$x_{min} = \frac{P0780 \cdot P0777 - P0778 \cdot P0779}{P0780 - P0778}$$

$$y_{max} = (x_{max} - x_{min}) \cdot \frac{P0780 - P0778}{P0779 - P0777}$$

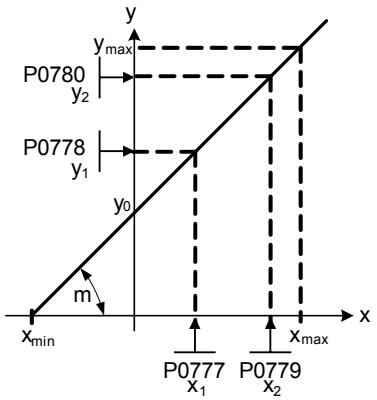

P0778[2]	Value y1 of DAC scaling			Min: 0	Level
	CStat: CUT	Datatype: Float	Unit: -	Def: 0	2
	P-Group: TERMINAL	Active: first confirm	QuickComm.: No	Max: 20	

Defines y1 of output characteristic.

Index:

P0778[0] : Analog output 1 (DAC 1)
P0778[1] : Analog output 2 (DAC 2)

P0779[2]	Value x2 of DAC scaling			Min: -99999.0	Level
	CStat: CUT	Datatype: Float	Unit: %	Def: 100.0	2
	P-Group: TERMINAL	Active: first confirm	QuickComm.: No	Max: 99999.0	

Defines x2 of output characteristic in [%].

Index:

P0779[0] : Analog output 1 (DAC 1)
P0779[1] : Analog output 2 (DAC 2)

Dependency:

Affects P2000 to P2003 (referency frequency, voltage, current or torque) depending on which setpoint is to be generated.

P0780[2]	Value y2 of DAC scaling			Min: 0	Level
	CStat: CUT	Datatype: Float	Unit: -	Def: 20	2
	P-Group: TERMINAL	Active: first confirm	QuickComm.: No	Max: 20	

Defines y2 of output characteristic.

Index:

P0780[0] : Analog output 1 (DAC 1)
P0780[1] : Analog output 2 (DAC 2)

P0781[2]	**Width of DAC deadband**			**Min:** 0	Level
	CStat: CUT	**Datatype:** Float	**Unit:** -	**Def:** 0	**2**
	P-Group: TERMINAL	**Active:** first confirm	**QuickComm.:** No	**Max:** 20	

Sets width of dead-band in [mA] for analog output.

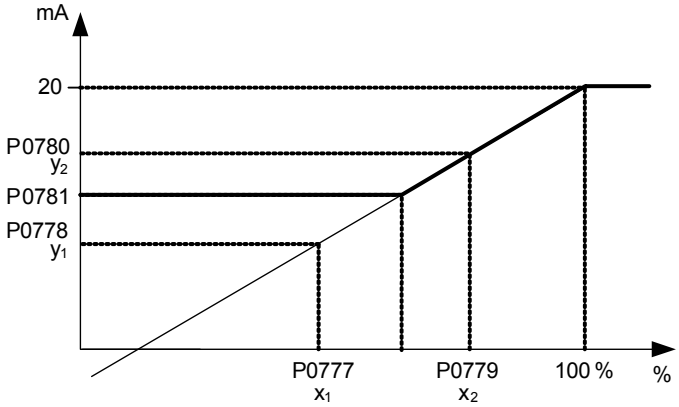

Index:

P0781[0] : Analog output 1 (DAC 1)
P0781[1] : Analog output 2 (DAC 2)

r0785	**CO/BO: Status word of DAC**			**Min:** -	Level
		Datatype: U16	**Unit:** -	**Def:** -	**2**
	P-Group: TERMINAL			**Max:** -	

Displays status of analog output. Bit 0 indicates that the value of analog output 1 is negative. Bit 1 indicates that the value of analog output 2 is negative.

Bitfields:

```
Bit00   Analog output 1 -ve                    0  NO        1  YES
Bit01   Analog output 2 -ve                    0  NO        1  YES
```

3.13 Parameter / command / drive data set

P0800[3]	BI: Download parameter set 0				Min: 0:0	Level
	CStat: CT	Datatype: U32	Unit: -		Def: 0:0	3
	P-Group: COMMANDS	Active: first confirm	QuickComm.: No		Max: 4000:0	

Defines source of command to start download of parameter set 0 from attached AOP.

Index:

P0800[0] : 1st. Command data set (CDS)
P0800[1] : 2nd. Command data set (CDS)
P0800[2] : 3rd. Command data set (CDS)

Common Settings:

722.0 = Digital input 1 (requires P0701 to be set to 99, BICO)
722.1 = Digital input 2 (requires P0702 to be set to 99, BICO)
722.2 = Digital input 3 (requires P0703 to be set to 99, BICO)
722.3 = Digital input 4 (requires P0704 to be set to 99, BICO)
722.4 = Digital input 5 (requires P0705 to be set to 99, BICO)
722.5 = Digital input 6 (requires P0706 to be set to 99, BICO)

Dependency:

1. The parameter set 0 can only be downloaded in conjunction with the AOP
2. Establish communications between the frequency inverter and AOP
3. The frequency inverter must be selected using the AOP if the AOP is connected at the COM link interface (RS485)
4. Select the frequency inverter state "Ready" (r0002 = 1)
5. Signal from P0800:
   0 = Do not download.
   1 = Start to download parameter set 0 from the AOP.

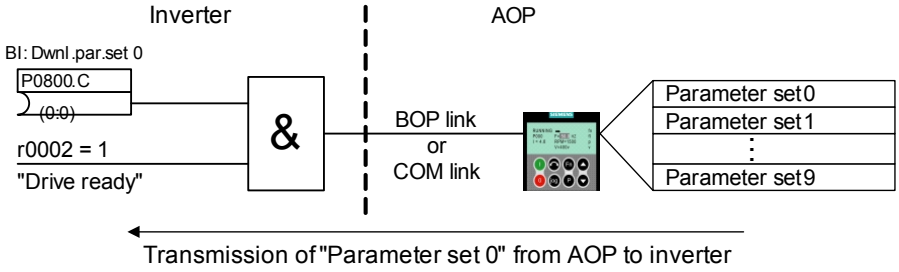

P0801[3]	BI: Download parameter set 1				Min: 0:0	Level
	CStat: CT	Datatype: U32	Unit: -		Def: 0:0	3
	P-Group: COMMANDS	Active: first confirm	QuickComm.: No		Max: 4000:0	

Defines sources of command to start download of parameter set 1 from attached AOP.

Index:

P0801[0] : 1st. Command data set (CDS)
P0801[1] : 2nd. Command data set (CDS)
P0801[2] : 3rd. Command data set (CDS)

Common Settings:

722.0 = Digital input 1 (requires P0701 to be set to 99, BICO)
722.1 = Digital input 2 (requires P0702 to be set to 99, BICO)
722.2 = Digital input 3 (requires P0703 to be set to 99, BICO)
722.3 = Digital input 4 (requires P0704 to be set to 99, BICO)
722.4 = Digital input 5 (requires P0705 to be set to 99, BICO)
722.5 = Digital input 6 (requires P0706 to be set to 99, BICO)

Note:

See parameter P0800

P0809[3]	**Copy command data set (CDS)**			**Min:** 0	Level
	CStat: CT	**Datatype:** U16	**Unit:** -	**Def:** 0	**2**
	P-Group: COMMANDS	**Active:** first confirm	**QuickComm.:** No	**Max:** 2	

Calls "copy Command Data Set (CDS)" function.
The list of all Command Data Sets (CDS) are shown in the opening instructions of the Parameter List (PLI).

Index:

P0809[0] : Copy from CDS
P0809[1] : Copy to CDS
P0809[2] : Start copy

Example:

Copying of all values from CDS1 to CDS3 can be accomplished by the following procedure:

P0809[0] = 0 1. CDS
P0809[1] = 2 3. CDS
P0809[2] = 1 Start copy

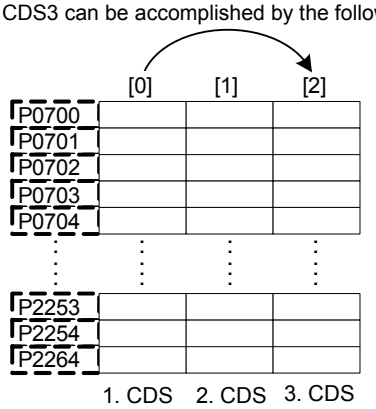

Note:

Start value in index 2 is automatically reset to "0" after execution of function.

P0810	**BI: CDS bit 0 (Local / Remote)**			**Min:** 0:0	Level
	CStat: CUT	**Datatype:** U32	**Unit:** -	**Def:** 0:0	**2**
	P-Group: COMMANDS	**Active:** first confirm	**QuickComm.:** No	**Max:** 4095:0	

Selects command source from which to read Bit 0 for selecting a command data set (CDS).

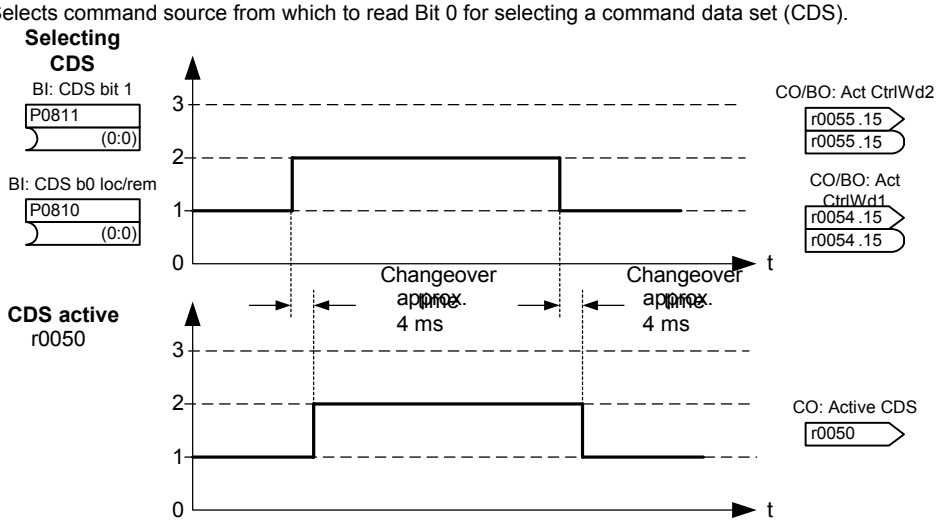

The actual active command data set (CDS) is displayed in parameter r0050.

	selected CDS		active CDS
	r0055 Bit 15	r0054 Bit 15	r0050
1. CDS	0	0	0
2. CDS	0	1	1
3. CDS	1	0	2
3. CDS	1	1	2

Common Settings:

722.0 = Digital input 1 (requires P0701 to be set to 99, BICO)
722.1 = Digital input 2 (requires P0702 to be set to 99, BICO)
722.2 = Digital input 3 (requires P0703 to be set to 99, BICO)
722.3 = Digital input 4 (requires P0704 to be set to 99, BICO)
722.4 = Digital input 5 (requires P0705 to be set to 99, BICO)
722.5 = Digital input 6 (requires P0706 to be set to 99, BICO)
722.6 = Digital input 7 (via analog input 1, requires P0707 to be set to 99)
722.7 = Digital input 8 (via analog input 2, requires P0708 to be set to 99)

Example:

Typical procedure for CDS switch-over:
- CDS1: Command source via terminal and setpoint source via analog input (ADC)
- CDS2: Command source via BOP and setpoint source via MOP
- CDS switch-over takes place via digital input 4 (DIN 4)

Steps:
1. Perform commissioning with CDS1 parameters (P0700[0] = 2 and P1000[0] = 2)
2. Connect P0810 (P0811 if necessary) with the source of CDS switch-over (P0704[0] = 99, P0810 = 722.3)
3. Copy CDS1 to CDS2 (P0809[0] = 0, P0809[1] = 1, P0809[2] = 2)
4. Change CDS2 parameter as required (set parameters for CDS2 [P0700=1 and P1000=1])

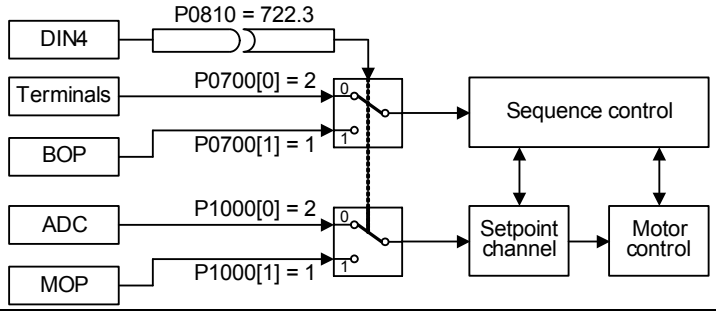

Note:

P0811 is also relevant for command data set (CDS) set selection.

P0811	**BI: CDS bit 1**				**Min:** 0:0	Level
	CStat: CUT	**Datatype:** U32	**Unit:** -		**Def:** 0:0	**2**
	P-Group: COMMANDS	**Active:** first confirm	**QuickComm.:** No		**Max:** 4095:0	

Selects command source from which to read Bit 1 for selecting a command data set (see P0810).

Common Settings:

722.0 = Digital input 1 (requires P0701 to be set to 99, BICO)
722.1 = Digital input 2 (requires P0702 to be set to 99, BICO)
722.2 = Digital input 3 (requires P0703 to be set to 99, BICO)
722.3 = Digital input 4 (requires P0704 to be set to 99, BICO)
722.4 = Digital input 5 (requires P0705 to be set to 99, BICO)
722.5 = Digital input 6 (requires P0706 to be set to 99, BICO)
722.6 = Digital input 7 (via analog input 1, requires P0707 to be set to 99)
722.7 = Digital input 8 (via analog input 2, requires P0708 to be set to 99)

Note:

P0810 is also relevant for command data set (CDS) selection.

P0819[3]	**Copy drive data set (DDS)**			**Min:** 0	Level
	CStat: CT	**Datatype:** U16	**Unit:** -	**Def:** 0	**2**
	P-Group: COMMANDS	**Active:** first confirm	**QuickComm.:** No	**Max:** 2	

Calls "Copy Drive Data Set (DDS)" function.

The list of all Drive Data Sets (DDS) are shown in the opening instructions of the Parameter List (PLI).

Index:

P0819[0] : Copy from DDS
P0819[1] : Copy to DDS
P0819[2] : Start copy

Example:

Copying of all values from DDS1 to DDS3 can be accomplished by the following procedure:

P0819[0] = 0 1. DDS
P0819[1] = 2 3. DDS
P0819[2] = 1 Start copy

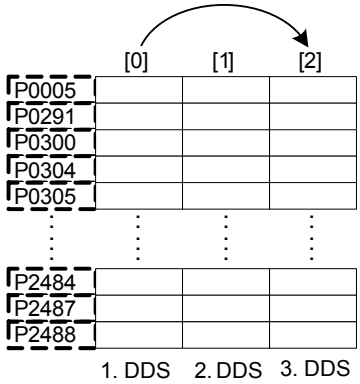

Note:

Start value in index 2 is automatically reset to "0" after execution of function.

P0820	**BI: DDS bit 0**			**Min:** 0:0	Level
	CStat: CT	**Datatype:** U32	**Unit:** -	**Def:** 0:0	**3**
	P-Group: COMMANDS	**Active:** first confirm	**QuickComm.:** No	**Max:** 4095:0	

Selects command source from which to read Bit 0 for selecting a drive data set (DDS).

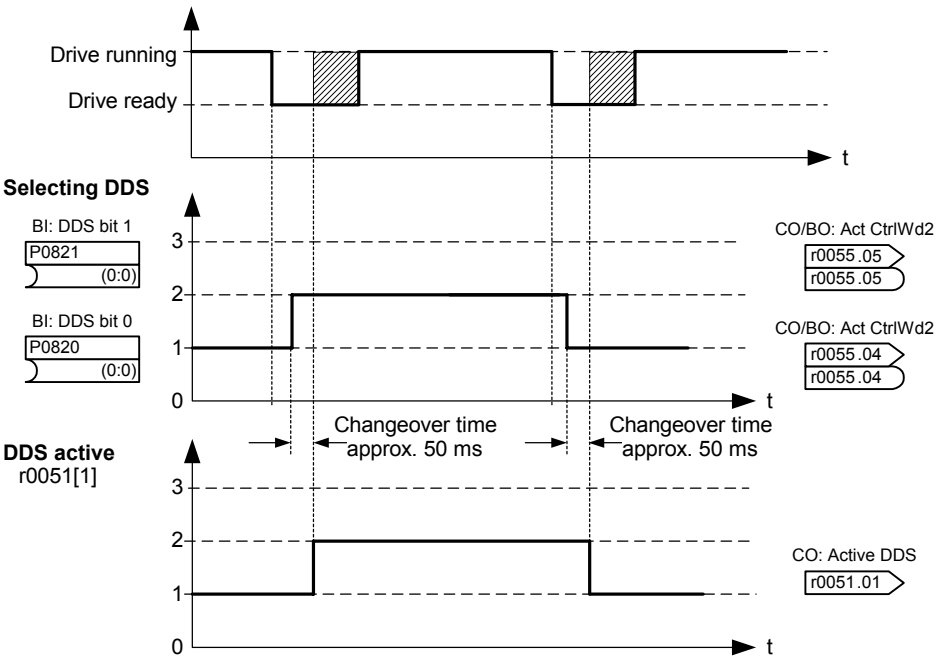

The actual active drive data set (DDS) is displayed in parameter r0051[1].

	selected DDS			active DDS
	r0055 Bit05	r0055 Bit04	r0051 [0]	r0051 [1]
1. DDS	0	0	0	0
2. DDS	0	1	1	1
3. DDS	1	0	2	2
3. DDS	1	1	2	2

Common Settings:

722.0 = Digital input 1 (requires P0701 to be set to 99, BICO)
722.1 = Digital input 2 (requires P0702 to be set to 99, BICO)
722.2 = Digital input 3 (requires P0703 to be set to 99, BICO)
722.3 = Digital input 4 (requires P0704 to be set to 99, BICO)
722.4 = Digital input 5 (requires P0705 to be set to 99, BICO)
722.5 = Digital input 6 (requires P0706 to be set to 99, BICO)
722.6 = Digital input 7 (via analog input 1, requires P0707 to be set to 99)
722.7 = Digital input 8 (via analog input 2, requires P0708 to be set to 99)

Example:

a) Commissioning procedure with one motor:
- Apply commissioning to DDS1
- Connect P0820 (P0821 if necessary) with DDS source (i.e. via DIN 4: P0704[0] = 99, P0820 = 722.3)
- Copy DDS1 to DDS2 (P0819[0] = 0, P0819[1] = 1, P0819[2] = 2)
- Adapt DDS2 parameters (e.g. Ramp-up time P1120[1] and Ramp-down time P1121[1])

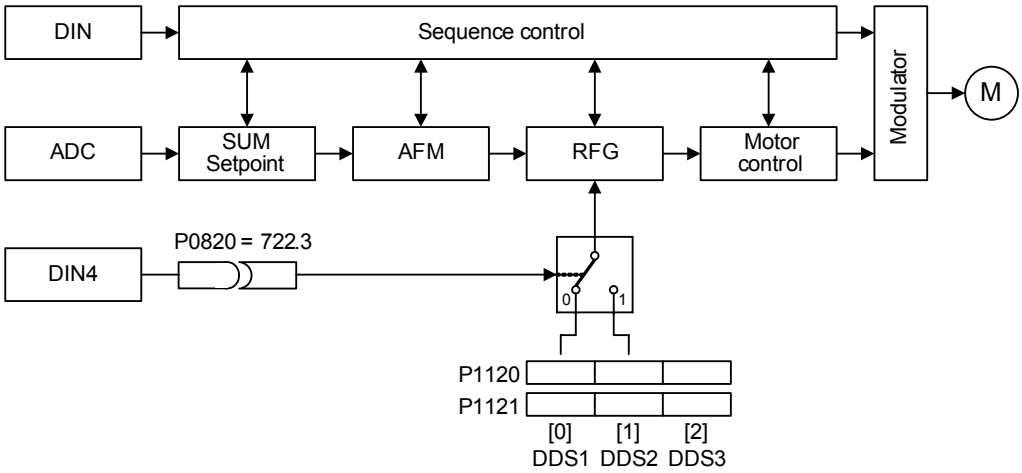

b) Commissioning procedure with two motors (Motor 1, Motor 2):
- Commission Motor 1; Adapt all other DDS1 parameters (as required)
- Connect P0820 (P0821 if necessary) with DDS source (i.e. via DIN 4: P0704[0] = 99, P0820 = 722.3)
- Switch-over to DDS2 (check it via r0051)
- Commission Motor 2; Adapt all other DDS2 parameters (as required)

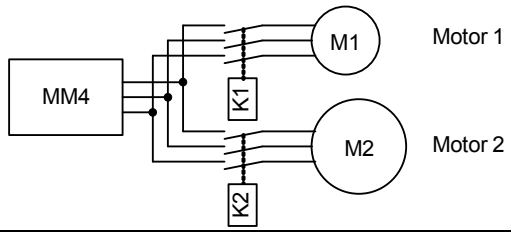

Note:

P0821 is also relevant for drive data set (DDS) selection.

P0821	**BI: DDS bit 1**			**Min:** 0:0	Level
	CStat: CT	**Datatype:** U32	**Unit:** -	**Def:** 0:0	**3**
	P-Group: COMMANDS	**Active:** first confirm	**QuickComm.:** No	**Max:** 4095:0	

Selects command source from which Bit 1 for selecting a drive data set is to be read in (see parameter P0820).

Common Settings:

722.0 = Digital input 1 (requires P0701 to be set to 99, BICO)
722.1 = Digital input 2 (requires P0702 to be set to 99, BICO)
722.2 = Digital input 3 (requires P0703 to be set to 99, BICO)
722.3 = Digital input 4 (requires P0704 to be set to 99, BICO)
722.4 = Digital input 5 (requires P0705 to be set to 99, BICO)
722.5 = Digital input 6 (requires P0706 to be set to 99, BICO)
722.6 = Digital input 7 (via analog input 1, requires P0707 to be set to 99)
722.7 = Digital input 8 (via analog input 2, requires P0708 to be set to 99)

Note:

P0820 is also relevant for drive data set (DDS) selection.

3.14 BICO command parameters

P0840[3]	**BI: ON/OFF1**			**Min:** 0:0	Level
	CStat: CT	**Datatype:** U32	**Unit:** -	**Def:** 722:0	**3**
	P-Group: COMMANDS	**Active:** first confirm	**QuickComm.:** No	**Max:** 4000:0	

Allows ON/OFF1 command source to be selected using BICO.

The first three digits describe the parameter number of the command source; the last digit denotes the bit setting for that parameter. The default setting (ON right) is digital input 1 (722.0). Alternative source possible only when function of digital input 1 is changed (via P0701) before changing value of P0840.

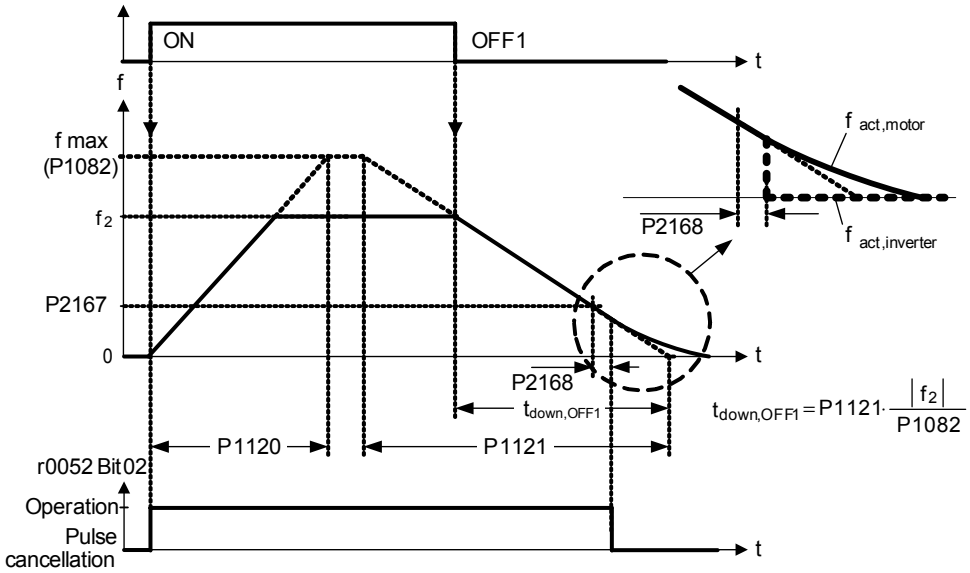

Index:

P0840[0] : 1st. Command data set (CDS)
P0840[1] : 2nd. Command data set (CDS)
P0840[2] : 3rd. Command data set (CDS)

Common Settings:

722.0 = Digital input 1 (requires P0701 to be set to 99, BICO)
722.1 = Digital input 2 (requires P0702 to be set to 99, BICO)
722.2 = Digital input 3 (requires P0703 to be set to 99, BICO)
722.3 = Digital input 4 (requires P0704 to be set to 99, BICO)
722.4 = Digital input 5 (requires P0705 to be set to 99, BICO)
722.5 = Digital input 6 (requires P0706 to be set to 99, BICO)
722.6 = Digital input 7 (via analog input 1, requires P0707 to be set to 99)
722.7 = Digital input 8 (via analog input 2, requires P0708 to be set to 99)
19.0 = ON/OFF1 via BOP

Dependency:

Active only when P0719 < 10. See parameter P0719 (Selection of command/setpoint source).

Note:

- OFF1 means a ramp stop down to 0 using P1121.
- OFF1 is low active.
- For the priority of all soft commands, the following applies: OFF2, OFF3, OFF1

P0842[3]	**BI: ON reverse/OFF1**			**Min:** 0:0	Level
	CStat: CT	**Datatype:** U32	**Unit:** -	**Def:** 0:0	**3**
	P-Group: COMMANDS	**Active:** first confirm	**QuickComm.:** No	**Max:** 4000:0	

Allows ON/OFF1 reverse command source to be selected using BICO.

Normally in this case at a positive frequency setpoint, it is getting approached ccw (negative frequency setpoint) The first three digits describe the parameter number of the command source and the last digit denotes the bit setting for that parameter.

Index:

P0842[0] : 1st. Command data set (CDS)
P0842[1] : 2nd. Command data set (CDS)
P0842[2] : 3rd. Command data set (CDS)

Common Settings:

722.0 = Digital input 1 (requires P0701 to be set to 99, BICO)
722.1 = Digital input 2 (requires P0702 to be set to 99, BICO)
722.2 = Digital input 3 (requires P0703 to be set to 99, BICO)
722.3 = Digital input 4 (requires P0704 to be set to 99, BICO)
722.4 = Digital input 5 (requires P0705 to be set to 99, BICO)
722.5 = Digital input 6 (requires P0706 to be set to 99, BICO)
722.6 = Digital input 7 (via analog input 1, requires P0707 to be set to 99)
722.7 = Digital input 8 (via analog input 2, requires P0708 to be set to 99)
19.0 = ON/OFF1 via BOP

Details:

See parameter P0840.

P0844[3]	**BI: 1. OFF2**			**Min:** 0:0	Level
	CStat: CT	**Datatype:** U32	**Unit:** -	**Def:** 1:0	**3**
	P-Group: COMMANDS	**Active:** first confirm	**QuickComm.:** No	**Max:** 4000:0	

Defines first source of OFF2.

The first three digits describe the parameter number of the command source and the last digit denotes the bit setting for that parameter. If one of the digital inputs is selected for OFF2, the inverter will not run unless the digital input is active.

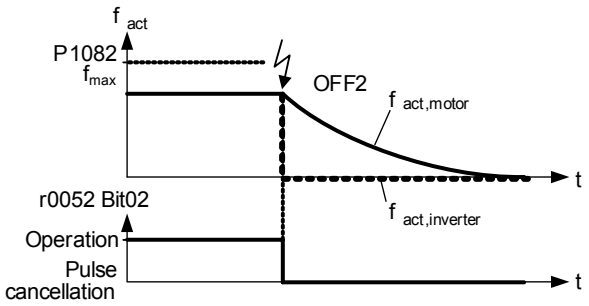

Index:

P0844[0] : 1st. Command data set (CDS)
P0844[1] : 2nd. Command data set (CDS)
P0844[2] : 3rd. Command data set (CDS)

Common Settings:

722.0 = Digital input 1 (requires P0701 to be set to 99, BICO)
722.1 = Digital input 2 (requires P0702 to be set to 99, BICO)
722.2 = Digital input 3 (requires P0703 to be set to 99, BICO)
722.3 = Digital input 4 (requires P0704 to be set to 99, BICO)
722.4 = Digital input 5 (requires P0705 to be set to 99, BICO)
722.5 = Digital input 6 (requires P0706 to be set to 99, BICO)
722.6 = Digital input 7 (via analog input 1, requires P0707 to be set to 99)
722.7 = Digital input 8 (via analog input 2, requires P0708 to be set to 99)
19.0 = ON/OFF1 via BOP
19.1 = OFF2: Electrical stop via BOP

Dependency:

Active only when P0719 < 10. See parameter P0719 (Selection of command/setpoint source).

Note:

- OFF2 means an immediate pulse inhibit; the motor coasts down.
- OFF2 is low active.
- The following applies for the priority of all of the OFF commands: OFF2, OFF3, OFF1

P0845[3]	**BI: 2. OFF2**			**Min:** 0:0	Level
	CStat: CT	**Datatype:** U32	**Unit:** -	**Def:** 19:1	**3**
	P-Group: COMMANDS	**Active:** first confirm	**QuickComm.:** No	**Max:** 4000:0	

Defines second source of OFF2.
The first three digits describe the parameter number of the command source and the last digit denotes the bit setting for that parameter. If one of the digital inputs is selected for OFF2, the inverter will not run unless the digital input is active.

Index:

P0845[0] : 1st. Command data set (CDS)
P0845[1] : 2nd. Command data set (CDS)
P0845[2] : 3rd. Command data set (CDS)

Common Settings:

722.0 = Digital input 1 (requires P0701 to be set to 99, BICO)
722.1 = Digital input 2 (requires P0702 to be set to 99, BICO)
722.2 = Digital input 3 (requires P0703 to be set to 99, BICO)
722.3 = Digital input 4 (requires P0704 to be set to 99, BICO)
722.4 = Digital input 5 (requires P0705 to be set to 99, BICO)
722.5 = Digital input 6 (requires P0706 to be set to 99, BICO)
722.6 = Digital input 7 (via analog input 1, requires P0707 to be set to 99)
722.7 = Digital input 8 (via analog input 2, requires P0708 to be set to 99)
19.0 = ON/OFF1 via BOP

Details:

See parameter P0844.

P0848[3]	**BI: 1. OFF3**			**Min:** 0:0	Level
	CStat: CT	**Datatype:** U32	**Unit:** -	**Def:** 1:0	**3**
	P-Group: COMMANDS	**Active:** first confirm	**QuickComm.:** No	**Max:** 4000:0	

Defines first source of OFF3.
The first three digits describe the parameter number of the command source and the last digit denotes the bit setting for that parameter. If one of the digital inputs is selected for OFF3, the inverter will not run unless the digital input is active.

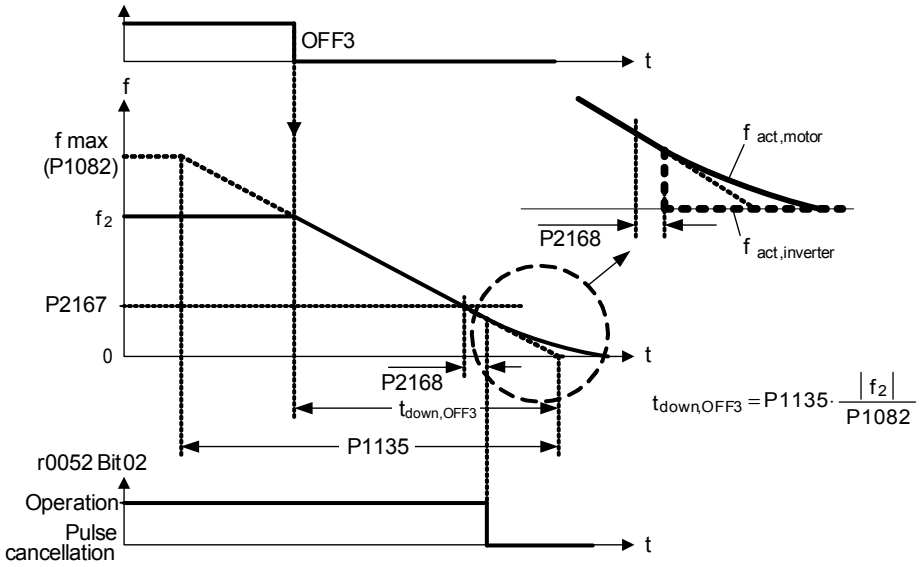

Index:

P0848[0] : 1st. Command data set (CDS)
P0848[1] : 2nd. Command data set (CDS)
P0848[2] : 3rd. Command data set (CDS)

Common Settings:

722.0 = Digital input 1 (requires P0701 to be set to 99, BICO)
722.1 = Digital input 2 (requires P0702 to be set to 99, BICO)
722.2 = Digital input 3 (requires P0703 to be set to 99, BICO)
722.3 = Digital input 4 (requires P0704 to be set to 99, BICO)
722.4 = Digital input 5 (requires P0705 to be set to 99, BICO)
722.5 = Digital input 6 (requires P0706 to be set to 99, BICO)
722.6 = Digital input 7 (via analog input 1, requires P0707 to be set to 99)
722.7 = Digital input 8 (via analog input 2, requires P0708 to be set to 99)
19.0 = ON/OFF1 via BOP

Dependency:

Active only when P0719 < 10. See parameter P0719 (Selection of command/setpoint source).

Note:

- OFF3 means fast ramp-down to 0 Hz through P1135.
- OFF3 is low-active.
- Priority of all OFF commands: OFF2, OFF3, OFF1

P0849[3]	**BI: 2. OFF3**				**Min:** 0:0	Level
	CStat: CT	**Datatype:** U32	**Unit:** -		**Def:** 1:0	**3**
	P-Group: COMMANDS	**Active:** first confirm	**QuickComm.:** No		**Max:** 4000:0	

Defines second source of OFF3.

The first three digits describe the parameter number of the command source and the last digit denotes the bit setting for that parameter. If one of the digital inputs is selected for OFF3, the inverter will not run unless the digital input is active.

Index:

P0849[0] : 1st. Command data set (CDS)
P0849[1] : 2nd. Command data set (CDS)
P0849[2] : 3rd. Command data set (CDS)

Common Settings:

722.0 = Digital input 1 (requires P0701 to be set to 99, BICO)
722.1 = Digital input 2 (requires P0702 to be set to 99, BICO)
722.2 = Digital input 3 (requires P0703 to be set to 99, BICO)
722.3 = Digital input 4 (requires P0704 to be set to 99, BICO)
722.4 = Digital input 5 (requires P0705 to be set to 99, BICO)
722.5 = Digital input 6 (requires P0706 to be set to 99, BICO)
722.6 = Digital input 7 (via analog input 1, requires P0707 to be set to 99)
722.7 = Digital input 8 (via analog input 2, requires P0708 to be set to 99)
19.0 = ON/OFF1 via BOP

Dependency:

In contrast to P0848 (first source of OFF3), this parameter is always active, independent of P0719 (selection of command and frequency setpoint).

Details:

See parameter P0848.

P0852[3]	**BI: Pulse enabling**				**Min:** 0:0	Level
	CStat: CT	**Datatype:** U32	**Unit:** -		**Def:** 1:0	**3**
	P-Group: COMMANDS	**Active:** first confirm	**QuickComm.:** No		**Max:** 4000:0	

Defines source of pulse enable/disable signal.

Index:

P0852[0] : 1st. Command data set (CDS)
P0852[1] : 2nd. Command data set (CDS)
P0852[2] : 3rd. Command data set (CDS)

Common Settings:

722.0 = Digital input 1 (requires P0701 to be set to 99, BICO)
722.1 = Digital input 2 (requires P0702 to be set to 99, BICO)
722.2 = Digital input 3 (requires P0703 to be set to 99, BICO)
722.3 = Digital input 4 (requires P0704 to be set to 99, BICO)
722.4 = Digital input 5 (requires P0705 to be set to 99, BICO)
722.5 = Digital input 6 (requires P0706 to be set to 99, BICO)
722.6 = Digital input 7 (via analog input 1, requires P0707 to be set to 99)
722.7 = Digital input 8 (via analog input 2, requires P0708 to be set to 99)

Dependency:

Active only when P0719 < 10. See parameter P0719 (Selection of command/setpoint source).

3.15 Communication parameters

P0918	**CB address**				**Min:** 0	Level
	CStat: CT	**Datatype:** U16	**Unit:** -		**Def:** 3	**2**
	P-Group: COMM	**Active:** first confirm	**QuickComm.:** No		**Max:** 65535	

Defines address of CB (communication board) or address of the other option modules.

There are two ways to set the bus address:
- via DIP switches on the PROFIBUS module
- via a user-entered value

Note:

Possible PROFIBUS settings:
- 1 ... 125
- 0, 126, 127 are not allowed

The following applies when a PROFIBUS module is used:
- DIP switch = 0 Address defined in P0918 (CB address) is valid
- DIP switch not = 0 DIP switch setting has priority and P0918 indicates DIP switch setting.

P0927	**Parameter changeable via**			**Min:** 0	Level
	CStat: CUT	**Datatype:** U16	**Unit:** -	**Def:** 15	**2**
	P-Group: COMM	**Active:** first confirm	**QuickComm.:** No	**Max:** 15	

Specifies the interfaces which can be used to change parameters.

This parameter allows the user to easily protect the inverter from unauthorized modification of parameters.
Annotation: Parameter P0927 is not password protected.

Bitfields:

Bit00	PROFIBUS / CB	0	NO	1	YES
Bit01	BOP	0	NO	1	YES
Bit02	USS on BOP link	0	NO	1	YES
Bit03	USS on COM link	0	NO	1	YES

Example:

Bits 0, 1, 2 and 3 set:
The default setting allows parameters to be changed via any interface. If all bits are set, the parameter is displayed on BOP as follows:

BOP:
P0927

Bits 0, 1, 2 and 3 reset:
This setting allows no parameters to be modified via any interface with the exception of P0003 and P0927. If all bits are reset, the parameter is displayed on BOP as follows:

BOP:
P0927

Details:

The seven-segment display is explained in the "Introduction to MICROMASTER System Parameters" in this handbook.

r0947[8]	**CO: Last fault code**			**Min:** -	Level
		Datatype: U16	**Unit:** -	**Def:** -	**2**
	P-Group: ALARMS			**Max:** -	

Displays fault history according to the diagram below
where:
- "F1" is the first active fault (not yet acknowledged).
- "F2" is the second active fault (not yet acknowledged).
- "F1e" is the occurrence of the fault acknowledgement for F1 & F2.

This moves the value in the 2 indices down to the next pair of indices, where they are stored. Indices 0 & 1 contain the active faults. When faults are acknowledged, indices 0 & 1 are reset to 0.

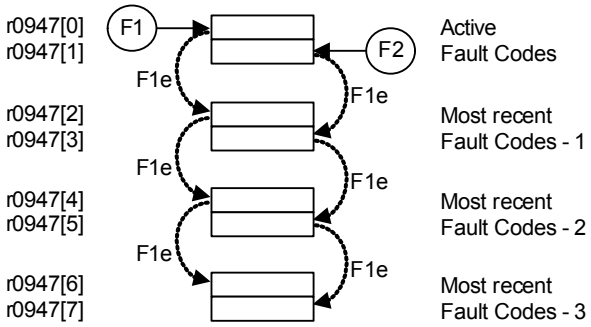

Index:

r0947[0] : Recent fault trip --, fault 1
r0947[1] : Recent fault trip --, fault 2
r0947[2] : Recent fault trip -1, fault 3
r0947[3] : Recent fault trip -1, fault 4
r0947[4] : Recent fault trip -2, fault 5
r0947[5] : Recent fault trip -2, fault 6
r0947[6] : Recent fault trip -3, fault 7
r0947[7] : Recent fault trip -3, fault 8

Example:

If the inverter trips on undervoltage and then receives an external trip before the undervoltage is acknowledged, you will obtain:
- r0947[0] = 3 Undervoltage (F0003)
- r0947[1] = 85 External trip (F0085)

Whenever a fault in index 0 is acknowledged (F1e), the fault history shifts as indicated in the diagram above.

Dependency:

Index 1 used only if second fault occurs before first fault is acknowledged.

Details:

See "Faults and Warnings"

r0948[12]	CO: Fault time	Datatype: U16	Unit: -	Min: -	Level
	P-Group: ALARMS			Def: -	3
				Max: -	

Time stamp to indicate when the fault has occurred.

Index:

r0948[0] : Recent fault trip --, time stamp
r0948[1] : Recent fault trip --, time stamp
r0948[2] : Recent fault trip --, time stamp
r0948[3] : Recent fault trip -1, time stamp
r0948[4] : Recent fault trip -1, time stamp
r0948[5] : Recent fault trip -1, time stamp
r0948[6] : Recent fault trip -2, time stamp
r0948[7] : Recent fault trip -2, time stamp
r0948[8] : Recent fault trip -2, time stamp
r0948[9] : Recent fault trip -3, time stamp
r0948[10] : Recent fault trip -3, time stamp
r0948[11] : Recent fault trip -3, time stamp

Details:

Parameter r2114 (runtime counter) is a possible source of the time stamp. When using the runtime counter, the time is entered into the first two indices of the fault trip (shutdown) essentially the same as for r2114.

Time stamp when using r2114 (Refer to parameter r2114):

r0948[0] : Last fault trip --, system time, seconds, upper word
r0948[1] : Last fault trip --, system time, seconds, lower word
r0948[2] : 0
r0948[3] : Last fault trip --, system time, seconds, upper word
r0948[4] : Last fault trip --, system time, seconds, lower word
r0948[5] : 0
r0948[6] : Last fault trip --, system time, seconds, upper word
r0948[7] : Last fault trip --, system time, seconds, lower word
r0948[8] : 0
r0948[9] : Last fault trip --, system time, seconds, upper word
r0948[10] : Last fault trip --, system time, seconds, lower word
r0948[11] : 0

Parameter P2115 (AOP real-time clock) is an additional possible source of the time stamp. When using the real-time counter, instead of the system runtime r2114[0] and r2114[1], the value of the real-time clock P2115[0] to P2115[2] is read-in.

If the contents of parameter P2115 = 0, then the system assumes that there was no synchronization with the real time. In this case, if there is a fault, values are transferred from parameter r2114 into parameter P0948. If the contents of parameter P2115 are not equal to zero, then a synchronization with real time has taken place. In this case, if there is a fault, the values from parameter P2115 are transferred into parameter P0948.

Time stamp when using P2115 (Refer to parameter P2115 (AOP real-time clock)):

r0948[0] : Last fault trip --, fault time, seconds + minutes
r0948[1] : Last fault trip --, fault time, hours + days
r0948[2] : Last fault trip --, fault time, month + year
r0948[3] : Last fault trip -1, fault time, seconds + minutes
r0948[4] : Last fault trip -1, fault time, hours + days
r0948[5] : Last fault trip -1, fault time, month + year
r0948[6] : Last fault trip -2, fault time, seconds + minutes
r0948[7] : Last fault trip -2, fault time, hours + days
r0948[8] : Last fault trip -2, fault time, month + year
r0948[9] : Last fault trip -3, fault time, seconds + minutes
r0948[10] : Last fault trip -3, fault time, hours + days
r0948[11] : Last fault trip -3, fault time, month + year

r0949[8]	CO: Fault value	Datatype: U16	Unit: -	Min: -	Level
	P-Group: ALARMS			Def: -	3
				Max: -	

Displays drive fault values. It is for service purposes and indicate the type of fault reported. The values are listed in the code where faults are reported.

Index:

r0949[0] : Recent fault trip --, fault value 1
r0949[1] : Recent fault trip --, fault value 2
r0949[2] : Recent fault trip -1, fault value 3
r0949[3] : Recent fault trip -1, fault value 4
r0949[4] : Recent fault trip -2, fault value 5
r0949[5] : Recent fault trip -2, fault value 6
r0949[6] : Recent fault trip -3, fault value 7
r0949[7] : Recent fault trip -3, fault value 8

P0952	**Total number of faults**			**Min:** 0	Level
	CStat: CT	**Datatype:** U16	**Unit:** -	**Def:** 0	**3**
	P-Group: ALARMS	**Active:** first confirm	**QuickComm.:** No	**Max:** 8	

Displays number of faults stored in r0947 (last fault code).

Dependency:

Setting 0 resets fault history. (changing to 0 also resets parameter r0948 - fault time).

r0964[5]	**Firmware version data**			**Min:** -	Level
		Datatype: U16	**Unit:** -	**Def:** -	**3**
	P-Group: COMM			**Max:** -	

Firmware version data.

Index:

r0964[0] : Company (Siemens = 42)
r0964[1] : Product type
r0964[2] : Firmware version
r0964[3] : Firmware date (year)
r0964[4] : Firmware date (day/month)

Example:

No.	Value	Meaning
r0964[0]	42	SIEMENS
r0964[1]	1001	MICROMASTER 420
	1002	MICROMASTER 440
	1003	MICRO- / COMBIMASTER 411
	1004	MICROMASTER 410
	1005	reserved
	1006	MICROMASTER 440 PX
	1007	MICROMASTER 430
r0964[2]	105	Firmware V1.05
r0964[3]	2001	27.10.2001
r0964[4]	2710	

r0965	**Profibus profile**			**Min:** -	Level
		Datatype: U16	**Unit:** -	**Def:** -	**3**
	P-Group: COMM			**Max:** -	

Identification of profile number and version for PROFIDrive.

r0967	**Control word 1**			**Min:** -	Level
		Datatype: U16	**Unit:** -	**Def:** -	**3**
	P-Group: COMM			**Max:** -	

Displays control word 1.

Bitfields:

```
Bit00   ON/OFF1                                  0  NO        1  YES
Bit01   OFF2: Electrical stop                    0  YES       1  NO
Bit02   OFF3: Fast stop                          0  YES       1  NO
Bit03   Pulses enabled                           0  NO        1  YES

Bit04   RFG enable                               0  NO        1  YES
Bit05   RFG start                                0  NO        1  YES
Bit06   Setpoint enable                          0  NO        1  YES
Bit07   Fault acknowledge                        0  NO        1  YES

Bit08   JOG right                                0  NO        1  YES
Bit09   JOG left                                 0  NO        1  YES
Bit10   Control from PLC                         0  NO        1  YES
Bit11   Reverse (setpoint inversion)             0  NO        1  YES

Bit13   Motor potentiometer MOP up               0  NO        1  YES
Bit14   Motor potentiometer MOP down             0  NO        1  YES
Bit15   CDS Bit 0 (Local/Remote)                 0  NO        1  YES
```

r0968	**Status word 1**			**Min:** -	Level
		Datatype: U16	**Unit:** -	**Def:** -	**3**
	P-Group: COMM			**Max:** -	

Displays active status word of inverter (in binary) and can be used to diagnose which commands are active.

Bitfields:

Bit00	Drive ready	0	NO	1	YES
Bit01	Drive ready to run	0	NO	1	YES
Bit02	Drive running	0	NO	1	YES
Bit03	Drive fault active	0	NO	1	YES
Bit04	OFF2 active	0	YES	1	NO
Bit05	OFF3 active	0	YES	1	NO
Bit06	ON inhibit active	0	NO	1	YES
Bit07	Drive warning active	0	NO	1	YES
Bit08	Deviation setpoint / act. value	0	YES	1	NO
Bit09	PZD control	0	NO	1	YES
Bit10	Maximum frequency reached	0	NO	1	YES
Bit11	Warning: Motor current limit	0	YES	1	NO
Bit12	Motor holding brake active	0	NO	1	YES
Bit13	Motor overload	0	YES	1	NO
Bit14	Motor runs right	0	NO	1	YES
Bit15	Inverter overload	0	YES	1	NO

P0970	**Factory reset**			**Min:** 0	Level
	CStat: C	**Datatype:** U16	**Unit:** -	**Def:** 0	**1**
	P-Group: PAR_RESET	**Active:** first confirm	**QuickComm.:** No	**Max:** 1	

P0970 = 1 resets all parameters to their default values.

Possible Settings:

0 Disabled
1 Parameter reset

Dependency:

- First set P0010 = 30 (factory settings).
- Stop drive (i.e. disable all pulses) before you can reset parameters to default values.

Note:

The following parameters retain their values after a factory reset:

- P0014 Store mode
- r0039 CO: Energy consumption meter [kWh]
- P0100 Europe / North America
- P0918 CB address
- P2010 USS baud rate
- P2011 USS address

P0971	**Transfer data from RAM to EEPROM**			**Min:** 0	Level
	CStat: CUT	**Datatype:** U16	**Unit:** -	**Def:** 0	**3**
	P-Group: COMM	**Active:** first confirm	**QuickComm.:** No	**Max:** 1	

Transfers values from RAM to EEPROM when set to 1.

Possible Settings:

0 Disabled
1 Start transfer

Note:

All values in RAM are transferred to EEPROM.

Parameter is automatically reset to 0 (default) after successful transfer.

The storage from RAM to EEPROM is accomplished via P0971. The communications are reset, if the transfer was successful. During the reset process communications will be interrupted. This creates the following conditions:

- PLC (e.g. SIMATIC S7) enters Stop mode
- Starter automatically recovers communications once they are re-established.
- Drivemonitor is displayed "NC" (not connected) in the status line or "drive busy".
- BOP displays "busy"

After completion of the transfer process, the communication between the inverter and the PC-tools (e.g. Starter) or BOP is automatically re-established.

3.16 Setpoint source

P1000[3]	**Selection of frequency setpoint**			**Min:** 0	Level
	CStat: CT	**Datatype:** U16	**Unit:** -	**Def:** 2	**1**
	P-Group: SETPOINT	**Active:** first confirm	**QuickComm.:** Yes	**Max:** 77	

Selects frequency setpoint source. In the table of possible settings below, the main setpoint is selected from the least significant digit (i.e., 0 to 7) and any additional setpoint from the most significant digit (i.e., x0 through to x7).

Possible Settings:

0	No main setpoint		
1	MOP setpoint		
2	Analog setpoint		
3	Fixed frequency		
4	USS on BOP link		
5	USS on COM link		
6	CB on COM link		
7	Analog setpoint 2		
10	No main setpoint	+	MOP setpoint
11	MOP setpoint	+	MOP setpoint
12	Analog setpoint	+	MOP setpoint
13	Fixed frequency	+	MOP setpoint
14	USS on BOP link	+	MOP setpoint
15	USS on COM link	+	MOP setpoint
16	CB on COM link	+	MOP setpoint
17	Analog setpoint 2	+	MOP setpoint
20	No main setpoint	+	Analog setpoint
21	MOP setpoint	+	Analog setpoint
22	Analog setpoint	+	Analog setpoint
23	Fixed frequency	+	Analog setpoint
24	USS on BOP link	+	Analog setpoint
25	USS on COM link	+	Analog setpoint
26	CB on COM link	+	Analog setpoint
27	Analog setpoint 2	+	Analog setpoint
30	No main setpoint	+	Fixed frequency
31	MOP setpoint	+	Fixed frequency
32	Analog setpoint	+	Fixed frequency
33	Fixed frequency	+	Fixed frequency
34	USS on BOP link	+	Fixed frequency
35	USS on COM link	+	Fixed frequency
36	CB on COM link	+	Fixed frequency
37	Analog setpoint 2	+	Fixed frequency
40	No main setpoint	+	USS on BOP link
41	MOP setpoint	+	USS on BOP link
42	Analog setpoint	+	USS on BOP link
43	Fixed frequency	+	USS on BOP link
44	USS on BOP link	+	USS on BOP link
45	USS on COM link	+	USS on BOP link
46	CB on COM link	+	USS on BOP link
47	Analog setpoint 2	+	USS on BOP link
50	No main setpoint	+	USS on COM link
51	MOP setpoint	+	USS on COM link
52	Analog setpoint	+	USS on COM link
53	Fixed frequency	+	USS on COM link
54	USS on BOP link	+	USS on COM link
55	USS on COM link	+	USS on COM link
57	Analog setpoint 2	+	USS on COM link
60	No main setpoint	+	CB on COM link
61	MOP setpoint	+	CB on COM link
62	Analog setpoint	+	CB on COM link
63	Fixed frequency	+	CB on COM link
64	USS on BOP link	+	CB on COM link
66	CB on COM link	+	CB on COM link
67	Analog setpoint 2	+	CB on COM link
70	No main setpoint	+	Analog setpoint 2
71	MOP setpoint	+	Analog setpoint 2
72	Analog setpoint	+	Analog setpoint 2
73	Fixed frequency	+	Analog setpoint 2
74	USS on BOP link	+	Analog setpoint 2
75	USS on COM link	+	Analog setpoint 2
76	CB on COM link	+	Analog setpoint 2
77	Analog setpoint 2	+	Analog setpoint 2

Index:

P1000[0] : 1st. Command data set (CDS)
P1000[1] : 2nd. Command data set (CDS)
P1000[2] : 3rd. Command data set (CDS)

Example:

Setting 12 selects main setpoint (2) derived from analog input with additional setpoint (1) taken from the motor potentiometer.

Example P1000 = 12 :

P1000 = **1**2 ⇒ P1070 = 755	P1070 CI: Main setpoint
	r0755 CO: Act. ADC after scal. [4000h]
P1000 = 1**2** ⇒ P1075 = 1050	P1075 CI: Additional setpoint
	r1050 CO: Act. Output freq. of the MOP

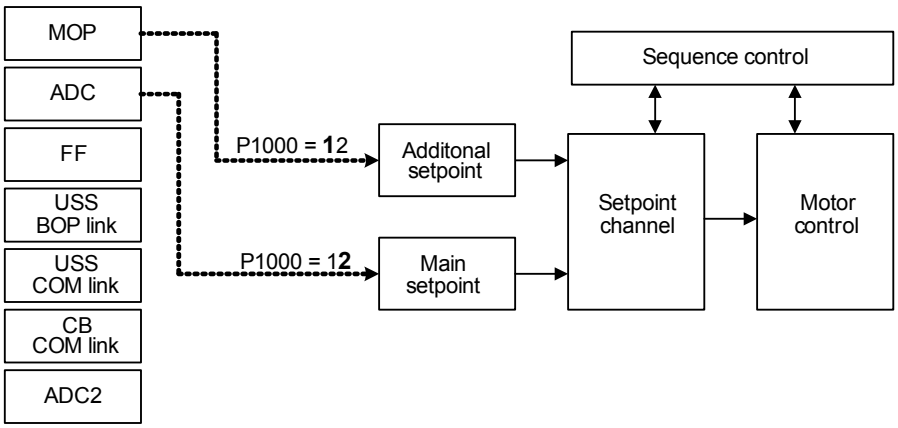

Caution:

Be aware, by changing of parameter P1000 all BICO parameters (see table below) are modified.

Note:

Single digits denote main setpoints that have no additional setpoint.

Changing this parameter sets (to default) all settings on item selected (see table).

P1000 = xy		y = 0	y = 1	y = 2	y = 3	y = 4	y = 5	y = 6	y = 7	
P1000 = xy	x = 0	0.0	1050.0	755.0	1024.0	2015.1	2018.1	2050.1	755.1	P1070
		1.0	1.0	1.0	1.0	1.0	1.0	1.0	1.0	P1071
		0.0	0.0	0.0	0.0	0.0	0.0	0.0	0.0	P1075
		1.0	1.0	1.0	1.0	1.0	1.0	1.0	1.0	P1076
	x = 1	0.0	1050.0	755.0	1024.0	2015.1	2018.1	2050.1	755.1	P1070
		1.0	1.0	1.0	1.0	1.0	1.0	1.0	1.0	P1071
		1050.0	1050.0	1050.0	1050.0	1050.0	1050.0	1050.0	1050.0	P1075
		1.0	1.0	1.0	1.0	1.0	1.0	1.0	1.0	P1076
	x = 2	0.0	1050.0	755.0	1024.0	2015.1	2018.1	2050.1	755.1	P1070
		1.0	1.0	1.0	1.0	1.0	1.0	1.0	1.0	P1071
		755.0	755.0	755.0	755.0	755.0	755.0	755.0	755.0	P1075
		1.0	1.0	1.0	1.0	1.0	1.0	1.0	1.0	P1076
	x = 3	0.0	1050.0	755.01	1024.0	2015.1	2018.1	2050.1	755.1	P1070
		1.0	1.0	1.0	1.0	1.0	1.0	1.0	1.0	P1071
		1024.0	1024.0	1024.0	1024.0	1024.0	1024.0	1024.0	1024.0	P1075
		1.0	1.0	1.0	1.0	1.0	1.0	1.0	1.0	P1076
	x = 4	0.0	1050.0	755.0	1024.0	2015.1	2018.1	2050.1	755.1	P1070
		1.0	1.0	1.0	1.0	1.0	1.0	1.0	1.0	P1071
		2015.1	2015.1	2015.1	2015.1	2015.1	2015.1	2015.1	2015.1	P1075
		1.0	1.0	1.0	1.0	1.0	1.0	1.0	1.0	P1076
	x = 5	0.0	1050.0	755.0	1024.0	2015.1	2018.1		755.1	P1070
		1.0	1.0	1.0	1.0	1.0	1.0		1.0	P1071
		2018.1	2018.1	2018.1	2018.1	2018.1	2018.1		2018.1	P1075
		1.0	1.0	1.0	1.0	1.0	1.0		1.0	P1076
	x = 6	0.0	1050.0	755.0	1024.0	2015.1		2050.1	755.1	P1070
		1.0	1.0	1.0	1.0	1.0		1.0	1.0	P1071
		2050.1	2050.1	2050.1	2050.1	2050.1		2050.1	2050.1	P1075
		1.0	1.0	1.0	1.0	1.0		1.0	1.0	P1076
	x = 7	0.0	1050.0	755.0	1024.0	2015.1	2018.1	2050.1	755.1	P1070
		1.0	1.0	1.0	1.0	1.0	1.0	1.0	1.0	P1071
		755.1	755.1	755.1	755.1	755.1	755.1	755.1	755.1	P1075
		1.0	1.0	1.0	1.0	1.0	1.0	1.0	1.0	P1076

Example:

P1000 = 21 → P1070 = 1050.0
P1071 = 1.0
P1075 = 755.0
P1076 = 1.0

3.17 Fixed frequencies

P1001[3]	**Fixed frequency 1**				**Min:** -650.00	Level
	CStat: CUT	**Datatype:** Float	**Unit:** Hz		**Def:** 0.00	**2**
	P-Group: SETPOINT	**Active:** Immediately	**QuickComm.:** No		**Max:** 650.00	

Defines fixed frequency setpoint 1.

There are three options available for selection of the fixed frequencies:
1. Direct selection
2. Direct selection + ON command
3. Binary coded selection + ON command

1. Direct selection (P0701 - P0706 = 15):
   - In this mode of operation 1 digital input selects 1 fixed frequency.
   - If several inputs are active together, the selected frequencies are summed.
   - E.g.: FF1 + FF2 + FF3 + FF4 + FF5 + FF6.

2. Direct selection + ON command (P0701 - P0706 = 16):
   - The fixed frequency selection combines the fixed frequencies with an ON command.
   - In this mode of operation 1 digital input selects 1 fixed frequency.
   - If several inputs are active together, the selected frequencies are summed.
   - E.g.: FF1 + FF2 + FF3 + FF4 + FF5 + FF6.

3. Binary coded selection + ON command (P0701 - P0706 = 17):
   - Up to 16 fixed frequencies can be selected using this method.
   - The fixed frequencies are selected according to the following table:

Index:

P1001[0] : 1st. Drive data set (DDS)
P1001[1] : 2nd. Drive data set (DDS)
P1001[2] : 3rd. Drive data set (DDS)

Example:

Binary coded selection :

		DIN4	DIN3	DIN2	DIN1
0 Hz	FF0	0	0	0	0
P1001	FF1	0	0	0	**1**
P1002	FF2	0	0	**1**	0
P1003	FF3	0	0	**1**	**1**
P1004	FF4	0	**1**	0	0
P1005	FF5	0	**1**	0	**1**
P1006	FF6	0	**1**	**1**	0
P1007	FF7	0	**1**	**1**	**1**
P1008	FF8	**1**	0	0	0
P1009	FF9	**1**	0	0	**1**
P1010	FF10	**1**	0	**1**	0
P1011	FF11	**1**	0	**1**	**1**
P1012	FF12	**1**	**1**	0	0
P1013	FF13	**1**	**1**	0	**1**
P1014	FF14	**1**	**1**	**1**	0
P1015	FF15	**1**	**1**	**1**	**1**

Direct selection of FF P1001 via DIN 1:

P0701 = 15 or P0701 = 99, P1020 = 722.0, P1016 = 1
P0702 = 15 or P0702 = 99, P1021 = 722.1, P1017 = 1

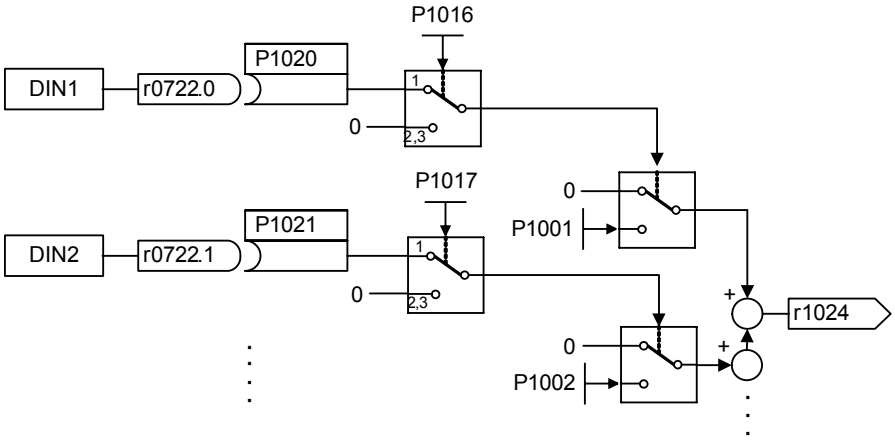

Dependency:

Select fixed frequency operation (using P1000).

Inverter requires ON command to start in the case of direct selection (P0701 - P0706 = 15).

Note:

Fixed frequencies can be selected using the digital inputs, and can also be combined with an ON command.

P1002[3]	**Fixed frequency 2**			**Min:** -650.00	Level
	CStat: CUT	**Datatype:** Float	**Unit:** Hz	**Def:** 5.00	**2**
	P-Group: SETPOINT	**Active:** Immediately	**QuickComm.:** No	**Max:** 650.00	

Defines fixed frequency setpoint 2.

Index:

P1002[0] : 1st. Drive data set (DDS)
P1002[1] : 2nd. Drive data set (DDS)
P1002[2] : 3rd. Drive data set (DDS)

Details:

See parameter P1001 (fixed frequency 1).

P1003[3]	**Fixed frequency 3**			**Min:** -650.00	Level
	CStat: CUT	**Datatype:** Float	**Unit:** Hz	**Def:** 10.00	**2**
	P-Group: SETPOINT	**Active:** Immediately	**QuickComm.:** No	**Max:** 650.00	

Defines fixed frequency setpoint 3.

Index:

P1003[0] : 1st. Drive data set (DDS)
P1003[1] : 2nd. Drive data set (DDS)
P1003[2] : 3rd. Drive data set (DDS)

Details:

See parameter P1001 (fixed frequency 1).

P1004[3]	**Fixed frequency 4**			**Min:** -650.00	Level
	CStat: CUT	**Datatype:** Float	**Unit:** Hz	**Def:** 15.00	**2**
	P-Group: SETPOINT	**Active:** Immediately	**QuickComm.:** No	**Max:** 650.00	

Defines fixed frequency setpoint 4.

Index:

P1004[0] : 1st. Drive data set (DDS)
P1004[1] : 2nd. Drive data set (DDS)
P1004[2] : 3rd. Drive data set (DDS)

Details:

See parameter P1001 (fixed frequency 1).

P1005[3]	**Fixed frequency 5**			**Min:** -650.00	Level
	CStat: CUT	**Datatype:** Float	**Unit:** Hz	**Def:** 20.00	**2**
	P-Group: SETPOINT	**Active:** Immediately	**QuickComm.:** No	**Max:** 650.00	

Defines fixed frequency setpoint 5.

Index:

P1005[0] : 1st. Drive data set (DDS)
P1005[1] : 2nd. Drive data set (DDS)
P1005[2] : 3rd. Drive data set (DDS)

Details:

See parameter P1001 (fixed frequency 1).

P1006[3]	**Fixed frequency 6**			**Min:** -650.00	Level
	CStat: CUT	**Datatype:** Float	**Unit:** Hz	**Def:** 25.00	**2**
	P-Group: SETPOINT	**Active:** Immediately	**QuickComm.:** No	**Max:** 650.00	

Defines fixed frequency setpoint 6.

Index:

P1006[0] : 1st. Drive data set (DDS)
P1006[1] : 2nd. Drive data set (DDS)
P1006[2] : 3rd. Drive data set (DDS)

Details:

See parameter P1001 (fixed frequency 1).

P1007[3]	**Fixed frequency 7**			**Min:** -650.00	Level
	CStat: CUT	**Datatype:** Float	**Unit:** Hz	**Def:** 30.00	**2**
	P-Group: SETPOINT	**Active:** Immediately	**QuickComm.:** No	**Max:** 650.00	

Defines fixed frequency setpoint 7.

Index:

P1007[0] : 1st. Drive data set (DDS)
P1007[1] : 2nd. Drive data set (DDS)
P1007[2] : 3rd. Drive data set (DDS)

Details:

See parameter P1001 (fixed frequency 1).

P1008[3]	**Fixed frequency 8**			**Min:** -650.00	Level
	CStat: CUT	**Datatype:** Float	**Unit:** Hz	**Def:** 35.00	**2**
	P-Group: SETPOINT	**Active:** Immediately	**QuickComm.:** No	**Max:** 650.00	

Defines fixed frequency setpoint 8.

Index:

P1008[0] : 1st. Drive data set (DDS)
P1008[1] : 2nd. Drive data set (DDS)
P1008[2] : 3rd. Drive data set (DDS)

Details:

See parameter P1001 (fixed frequency 1).

P1009[3]	**Fixed frequency 9**			**Min:** -650.00	Level
	CStat: CUT	**Datatype:** Float	**Unit:** Hz	**Def:** 40.00	**2**
	P-Group: SETPOINT	**Active:** Immediately	**QuickComm.:** No	**Max:** 650.00	

Defines fixed frequency setpoint 9.

Index:

P1009[0] : 1st. Drive data set (DDS)
P1009[1] : 2nd. Drive data set (DDS)
P1009[2] : 3rd. Drive data set (DDS)

Details:

See parameter P1001 (fixed frequency 1).

P1010[3]	**Fixed frequency 10**			**Min:** -650.00	Level
	CStat: CUT	**Datatype:** Float	**Unit:** Hz	**Def:** 45.00	**2**
	P-Group: SETPOINT	**Active:** Immediately	**QuickComm.:** No	**Max:** 650.00	

Defines fixed frequency setpoint 10.

Index:

P1010[0] : 1st. Drive data set (DDS)
P1010[1] : 2nd. Drive data set (DDS)
P1010[2] : 3rd. Drive data set (DDS)

Details:

See parameter P1001 (fixed frequency 1).

P1011[3]	**Fixed frequency 11**			**Min:** -650.00	Level
	CStat: CUT	**Datatype:** Float	**Unit:** Hz	**Def:** 50.00	**2**
	P-Group: SETPOINT	**Active:** Immediately	**QuickComm.:** No	**Max:** 650.00	

Defines fixed frequency setpoint 11.

Index:

P1011[0] : 1st. Drive data set (DDS)
P1011[1] : 2nd. Drive data set (DDS)
P1011[2] : 3rd. Drive data set (DDS)

Details:

See parameter P1001 (fixed frequency 1).

P1012[3]	Fixed frequency 12				Min: -650.00	Level
	CStat: CUT	Datatype: Float	Unit: Hz		Def: 55.00	2
	P-Group: SETPOINT	Active: Immediately	QuickComm.: No		Max: 650.00	

Defines fixed frequency setpoint 12.

Index:

P1012[0] : 1st. Drive data set (DDS)
P1012[1] : 2nd. Drive data set (DDS)
P1012[2] : 3rd. Drive data set (DDS)

Details:

See parameter P1001 (fixed frequency 1).

P1013[3]	Fixed frequency 13				Min: -650.00	Level
	CStat: CUT	Datatype: Float	Unit: Hz		Def: 60.00	2
	P-Group: SETPOINT	Active: Immediately	QuickComm.: No		Max: 650.00	

Defines fixed frequency setpoint 13.

Index:

P1013[0] : 1st. Drive data set (DDS)
P1013[1] : 2nd. Drive data set (DDS)
P1013[2] : 3rd. Drive data set (DDS)

Details:

See parameter P1001 (fixed frequency 1).

P1014[3]	Fixed frequency 14				Min: -650.00	Level
	CStat: CUT	Datatype: Float	Unit: Hz		Def: 65.00	2
	P-Group: SETPOINT	Active: Immediately	QuickComm.: No		Max: 650.00	

Defines fixed frequency setpoint 14.

Index:

P1014[0] : 1st. Drive data set (DDS)
P1014[1] : 2nd. Drive data set (DDS)
P1014[2] : 3rd. Drive data set (DDS)

Details:

See parameter P1001 (fixed frequency 1).

P1015[3]	Fixed frequency 15				Min: -650.00	Level
	CStat: CUT	Datatype: Float	Unit: Hz		Def: 65.00	2
	P-Group: SETPOINT	Active: Immediately	QuickComm.: No		Max: 650.00	

Defines fixed frequency setpoint 15.

Index:

P1015[0] : 1st. Drive data set (DDS)
P1015[1] : 2nd. Drive data set (DDS)
P1015[2] : 3rd. Drive data set (DDS)

Details:

See parameter P1001 (fixed frequency 1).

P1016[3]	Fixed frequency mode - Bit 0				Min: 1	Level
	CStat: CT	Datatype: U16	Unit: -		Def: 1	3
	P-Group: SETPOINT	Active: first confirm	QuickComm.: No		Max: 3	

Fixed frequencies can be selected in three different modes. Parameter P1016 defines the mode of selection Bit 0.

Possible Settings:

1 Direct selection
2 Direct selection + ON command
3 Binary coded selection + ON command

Index:

P1016[0] : 1st. Command data set (CDS)
P1016[1] : 2nd. Command data set (CDS)
P1016[2] : 3rd. Command data set (CDS)

Details:

See table in P1001 (fixed frequency 1) for description of how to use fixed frequencies.

P1017[3]	Fixed frequency mode - Bit 1			Min: 1	Level
	CStat: CT	Datatype: U16	Unit: -	Def: 1	3
	P-Group: SETPOINT	Active: first confirm	QuickComm.: No	Max: 3	

Fixed frequencies can be selected in three different modes. Parameter P1017 defines the mode of selection Bit 1.

Possible Settings:

1 Direct selection
2 Direct selection + ON command
3 Binary coded selection + ON command

Index:

P1017[0] : 1st. Command data set (CDS)
P1017[1] : 2nd. Command data set (CDS)
P1017[2] : 3rd. Command data set (CDS)

Details:

See table in P1001 (fixed frequency 1) for description of how to use fixed frequencies.

P1018[3]	Fixed frequency mode - Bit 2			Min: 1	Level
	CStat: CT	Datatype: U16	Unit: -	Def: 1	3
	P-Group: SETPOINT	Active: first confirm	QuickComm.: No	Max: 3	

Fixed frequencies can be selected in three different modes. Parameter P1018 defines the mode of selection Bit 2.

Possible Settings:

1 Direct selection
2 Direct selection + ON command
3 Binary coded selection + ON command

Index:

P1018[0] : 1st. Command data set (CDS)
P1018[1] : 2nd. Command data set (CDS)
P1018[2] : 3rd. Command data set (CDS)

Details:

See table in P1001 (fixed frequency 1) for description of how to use fixed frequencies.

P1019[3]	Fixed frequency mode - Bit 3			Min: 1	Level
	CStat: CT	Datatype: U16	Unit: -	Def: 1	3
	P-Group: SETPOINT	Active: first confirm	QuickComm.: No	Max: 3	

Fixed frequencies can be selected in three different modes. Parameter P1019 defines the mode of selection Bit 3.

Possible Settings:

1 Direct selection
2 Direct selection + ON command
3 Binary coded selection + ON command

Index:

P1019[0] : 1st. Command data set (CDS)
P1019[1] : 2nd. Command data set (CDS)
P1019[2] : 3rd. Command data set (CDS)

Details:

See table in P1001 (fixed frequency 1) for description of how to use fixed frequencies.

P1020[3]	BI: Fixed freq. selection Bit 0			Min: 0:0	Level
	CStat: CT	Datatype: U32	Unit: -	Def: 0:0	3
	P-Group: COMMANDS	Active: first confirm	QuickComm.: No	Max: 4000:0	

Defines origin of fixed frequency selection.

Index:

P1020[0] : 1st. Command data set (CDS)
P1020[1] : 2nd. Command data set (CDS)
P1020[2] : 3rd. Command data set (CDS)

Common Settings:

P1020 = 722.0 ==> Digital input 1
P1021 = 722.1 ==> Digital input 2
P1022 = 722.2 ==> Digital input 3
P1023 = 722.3 ==> Digital input 4
P1026 = 722.4 ==> Digital input 5
P1028 = 722.5 ==> Digital input 6

Dependency:

Accessible only if P0701 - P0706 = 99 (function of digital inputs = BICO)

P1021[3]	**BI: Fixed freq. selection Bit 1**			**Min:** 0:0	Level
	CStat: CT	**Datatype:** U32	**Unit:** -	**Def:** 0:0	**3**
	P-Group: COMMANDS	**Active:** first confirm	**QuickComm.:** No	**Max:** 4000:0	

Defines origin of fixed frequency selection.

Index:

P1021[0] : 1st. Command data set (CDS)
P1021[1] : 2nd. Command data set (CDS)
P1021[2] : 3rd. Command data set (CDS)

Dependency:

Accessible only if P0701 - P0706 = 99 (function of digital inputs = BICO)

Details:

See P1020 (fixed frequency selection Bit 0) for most common settings

P1022[3]	**BI: Fixed freq. selection Bit 2**			**Min:** 0:0	Level
	CStat: CT	**Datatype:** U32	**Unit:** -	**Def:** 0:0	**3**
	P-Group: COMMANDS	**Active:** first confirm	**QuickComm.:** No	**Max:** 4000:0	

Defines origin of fixed frequency selection.

Index:

P1022[0] : 1st. Command data set (CDS)
P1022[1] : 2nd. Command data set (CDS)
P1022[2] : 3rd. Command data set (CDS)

Dependency:

Accessible only if P0701 - P0706 = 99 (function of digital inputs = BICO)

Details:

See P1020 (fixed frequency selection Bit 0) for most common settings

P1023[3]	**BI: Fixed freq. selection Bit 3**			**Min:** 0:0	Level
	CStat: CT	**Datatype:** U32	**Unit:** -	**Def:** 722:3	**3**
	P-Group: COMMANDS	**Active:** first confirm	**QuickComm.:** No	**Max:** 4000:0	

Defines origin of fixed frequency selection.

Index:

P1023[0] : 1st. Command data set (CDS)
P1023[1] : 2nd. Command data set (CDS)
P1023[2] : 3rd. Command data set (CDS)

Dependency:

Accessible only if P0701 - P0706 = 99 (function of digital inputs = BICO)

Details:

See P1020 (fixed frequency selection Bit 0) for most common settings

r1024	**CO: Act. fixed frequency**			**Min:** -	Level
		Datatype: Float	**Unit:** Hz	**Def:** -	**3**
	P-Group: SETPOINT			**Max:** -	

Displays sum total of selected fixed frequencies.

P1025[3]	**Fixed frequency mode - Bit 4**			**Min:** 1	Level
	CStat: CT	**Datatype:** U16	**Unit:** -	**Def:** 1	**3**
	P-Group: SETPOINT	**Active:** first confirm	**QuickComm.:** No	**Max:** 2	

Direct selection or direct selection + ON for bit 4

Possible Settings:

1 Direct selection
2 Direct selection + ON command

Index:

P1025[0] : 1st. Command data set (CDS)
P1025[1] : 2nd. Command data set (CDS)
P1025[2] : 3rd. Command data set (CDS)

Details:

See parameter P1001 for description of how to use fixed frequencies.

P1026[3]	**BI: Fixed freq. selection Bit 4**			**Min:** 0:0	Level
	CStat: CT	**Datatype:** U32	**Unit:** -	**Def:** 722:4	**3**
	P-Group: COMMANDS	**Active:** first confirm	**QuickComm.:** No	**Max:** 4000:0	

Defines origin of fixed frequency selection.

Index:

P1026[0] : 1st. Command data set (CDS)
P1026[1] : 2nd. Command data set (CDS)
P1026[2] : 3rd. Command data set (CDS)

Dependency:

Accessible only if P0701 - P0706 = 99 (function of digital inputs = BICO).

Details:

See P1020 (fixed frequency selection Bit 0) for most common settings.

P1027[3]	**Fixed frequency mode - Bit 5**			**Min:** 1	Level
	CStat: CT	**Datatype:** U16	**Unit:** -	**Def:** 1	**3**
	P-Group: SETPOINT	**Active:** first confirm	**QuickComm.:** No	**Max:** 2	

direct selection or direct selection + ON for bit 5

Possible Settings:

1 Direct selection
2 Direct selection + ON command

Index:

P1027[0] : 1st. Command data set (CDS)
P1027[1] : 2nd. Command data set (CDS)
P1027[2] : 3rd. Command data set (CDS)

Details:

See parameter P1001 for description of how to use fixed frequencies.

P1028[3]	**BI: Fixed freq. selection Bit 5**			**Min:** 0:0	Level
	CStat: CT	**Datatype:** U32	**Unit:** -	**Def:** 722:5	**3**
	P-Group: COMMANDS	**Active:** first confirm	**QuickComm.:** No	**Max:** 4000:0	

Defines origin of fixed frequency selection.

Index:

P1028[0] : 1st. Command data set (CDS)
P1028[1] : 2nd. Command data set (CDS)
P1028[2] : 3rd. Command data set (CDS)

Dependency:

Accessible only if P0701 - P0706 = 99 (function of digital inputs = BICO).

Details:

See P1020 (fixed frequency selection Bit 0) for most common settings.

3.18 Motorized potentiometer (MOP)

P1031[3]	Setpoint memory of the MOP			Min: 0	Level
	CStat: CUT	Datatype: U16	Unit: -	Def: 0	2
	P-Group: SETPOINT	Active: Immediately	QuickComm.: No	Max: 1	

Saves last motor potentiometer setpoint (MOP) that was active before OFF command or power down.

Possible Settings:

0 MOP setpoint will not be stored
1 MOP setpoint will be stored (P1040 is updated)

Index:

P1031[0] : 1st. Drive data set (DDS)
P1031[1] : 2nd. Drive data set (DDS)
P1031[2] : 3rd. Drive data set (DDS)

Note:

On next ON command, motor potentiometer setpoint will be the saved value in parameter P1040 (setpoint of the MOP).

P1032	Inhibit negative MOP setpoints			Min: 0	Level
	CStat: CT	Datatype: U16	Unit: -	Def: 1	2
	P-Group: SETPOINT	Active: first confirm	QuickComm.: No	Max: 1	

This parameter suppresses negative setpoints of the MOP output r1050.

Possible Settings:

0 Neg. MOP setpoint is allowed
1 Neg. MOP setpoint inhibited

Note:

The reversing functions (e.g. BOP-Reverse button if P0700 = 1) are not affected by the settings of P1032. Use P1110 to fully prevent change of direction in setpoint channel.

P1035[3]	BI: Enable MOP (UP-command)			Min: 0:0	Level
	CStat: CT	Datatype: U32	Unit: -	Def: 19:13	3
	P-Group: COMMANDS	Active: first confirm	QuickComm.: No	Max: 4000:0	

Defines source for motor potentiometer setpoint increase frequency.

Index:

P1035[0] : 1st. Command data set (CDS)
P1035[1] : 2nd. Command data set (CDS)
P1035[2] : 3rd. Command data set (CDS)

Common Settings:

722.0 = Digital input 1 (requires P0701 to be set to 99, BICO)
722.1 = Digital input 2 (requires P0702 to be set to 99, BICO)
722.2 = Digital input 3 (requires P0703 to be set to 99, BICO)
722.3 = Digital input 4 (requires P0704 to be set to 99, BICO)
722.4 = Digital input 5 (requires P0705 to be set to 99, BICO)
722.5 = Digital input 6 (requires P0706 to be set to 99, BICO)
722.6 = Digital input 7 (via analog input 1, requires P0707 to be set to 99)
722.7 = Digital input 8 (via analog input 2, requires P0708 to be set to 99)
19.D = MOP up via BOP

P1036[3]	BI: Enable MOP (DOWN-command)			Min: 0:0	Level
	CStat: CT	Datatype: U32	Unit: -	Def: 19:14	3
	P-Group: COMMANDS	Active: first confirm	QuickComm.: No	Max: 4000:0	

Defines source for motor potentiometer setpoint decrease frequency.

Index:

P1036[0] : 1st. Command data set (CDS)
P1036[1] : 2nd. Command data set (CDS)
P1036[2] : 3rd. Command data set (CDS)

Common Settings:

722.0 = Digital input 1 (requires P0701 to be set to 99, BICO)
722.1 = Digital input 2 (requires P0702 to be set to 99, BICO)
722.2 = Digital input 3 (requires P0703 to be set to 99, BICO)
722.3 = Digital input 4 (requires P0704 to be set to 99, BICO)
722.4 = Digital input 5 (requires P0705 to be set to 99, BICO)
722.5 = Digital input 6 (requires P0706 to be set to 99, BICO)
722.6 = Digital input 7 (via analog input 1, requires P0707 to be set to 99)
722.7 = Digital input 8 (via analog input 2, requires P0708 to be set to 99)
19.E = MOP down via BOP

P1040[3]	Setpoint of the MOP			Min: -650.00	Level
	CStat: CUT	Datatype: Float	Unit: Hz	Def: 5.00	2
	P-Group: SETPOINT	Active: Immediately	QuickComm.: No	Max: 650.00	

Determines setpoint for motor potentiometer control (P1000 = 1).

Index:

P1040[0] : 1st. Drive data set (DDS)
P1040[1] : 2nd. Drive data set (DDS)
P1040[2] : 3rd. Drive data set (DDS)

Note:

- If motor potentiometer setpoint is selected either as main setpoint or additional setpoint, the reverse direction will be inhibited by default of P1032 (inhibit reverse direction of MOP).
- To re-enable reverse direction, set P1032 = 0.

r1050	CO: Act. Output freq. of the MOP			Min: -	Level
		Datatype: Float	Unit: Hz	Def: -	3
	P-Group: SETPOINT			Max: -	

Displays output frequency of motor potentiometer setpoint ([Hz]).

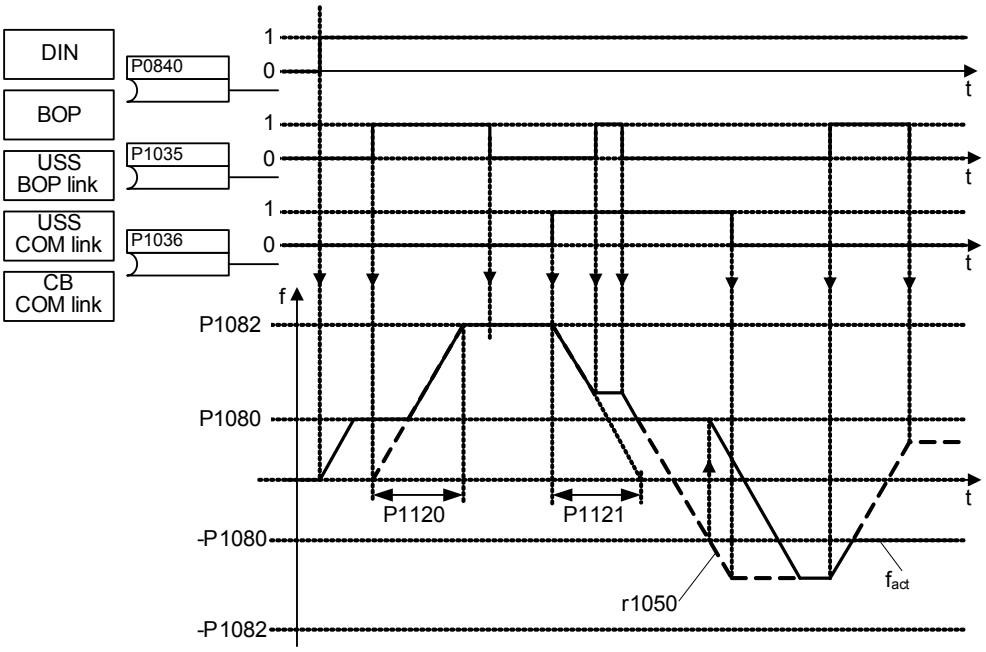

Possible parameter settings for the selection of MOP:

	Selection	MOP up	MOP down
DIN	P0719 = 0, P0700 = 2, P1000 = 1 or P0719 = 1, P0700 = 2	P0702 = 13 (DIN2)	P0703 = 14 (DIN3)
BOP	P0719 = 0, P0700 = 1, P1000 = 1 or P0719 = 1, P0700 = 1 or P0719 = 11	UP button	DOWN button
USS on BOP link	P0719 = 0, P0700 = 4, P1000 = 1 or P0719 = 1, P0700 = 4 or P0719 = 41	USS control word r2032 Bit 13	USS control word r2032 Bit 14
USS on COM link	P0719 = 0, P0700 = 5, P1000 = 1 or P0719 = 1, P0700 = 5 or P0719 = 51	USS control word r2036 Bit 13	USS control word r2036 Bit 14
CB	P0719 = 0, P0700 = 6, P1000 = 1 or P0719 = 1, P0700 = 6 or P0719 = 61	CB control word r2090 Bit 13	CB control word r2090 Bit 14

3.19 JOG

P1055[3]	BI: Enable JOG right				Min: 0:0	Level
	CStat: CT	Datatype: U32	Unit: -		Def: 0:0	3
	P-Group: COMMANDS	Active: first confirm	QuickComm.: No		Max: 4000:0	

Defines source of JOG right.

Index:

P1055[0] : 1st. Command data set (CDS)
P1055[1] : 2nd. Command data set (CDS)
P1055[2] : 3rd. Command data set (CDS)

Common Settings:

722.0 = Digital input 1 (requires P0701 to be set to 99, BICO)
722.1 = Digital input 2 (requires P0702 to be set to 99, BICO)
722.2 = Digital input 3 (requires P0703 to be set to 99, BICO)
722.3 = Digital input 4 (requires P0704 to be set to 99, BICO)
722.4 = Digital input 5 (requires P0705 to be set to 99, BICO)
722.5 = Digital input 6 (requires P0706 to be set to 99, BICO)
722.6 = Digital input 7 (via analog input 1, requires P0707 to be set to 99)
722.7 = Digital input 8 (via analog input 2, requires P0708 to be set to 99)
19.8 = JOG right via BOP

Dependency:

Active only when P0719 < 10. See parameter P0719 (Selection of command/setpoint source).

P1056[3]	BI: Enable JOG left				Min: 0:0	Level
	CStat: CT	Datatype: U32	Unit: -		Def: 0:0	3
	P-Group: COMMANDS	Active: first confirm	QuickComm.: No		Max: 4000:0	

Defines source of JOG left.

Index:

P1056[0] : 1st. Command data set (CDS)
P1056[1] : 2nd. Command data set (CDS)
P1056[2] : 3rd. Command data set (CDS)

Common Settings:

722.0 = Digital input 1 (requires P0701 to be set to 99, BICO)
722.1 = Digital input 2 (requires P0702 to be set to 99, BICO)
722.2 = Digital input 3 (requires P0703 to be set to 99, BICO)
722.3 = Digital input 4 (requires P0704 to be set to 99, BICO)
722.4 = Digital input 5 (requires P0705 to be set to 99, BICO)
722.5 = Digital input 6 (requires P0706 to be set to 99, BICO)
722.6 = Digital input 7 (via analog input 1, requires P0707 to be set to 99)
722.7 = Digital input 8 (via analog input 2, requires P0708 to be set to 99)
19.9 = JOG left via BOP

Dependency:

Active only when P0719 < 10. See parameter P0719 (Selection of command/setpoint source).

P1058[3]	**JOG frequency right**			**Min:** 0.00	Level
	CStat: CUT	**Datatype:** Float	**Unit:** Hz	**Def:** 5.00	**2**
	P-Group: SETPOINT	**Active:** Immediately	**QuickComm.:** No	**Max:** 650.00	

Jogging increases the motor frequency by small amounts. The JOG buttons uses a non-latching switch on one of the digital inputs to control the motor frequency.

If JOG clockwise (jogging clockwise) or JOG counter-clockwise is selected, the speed is increased until the value, set in P1058 is reached.

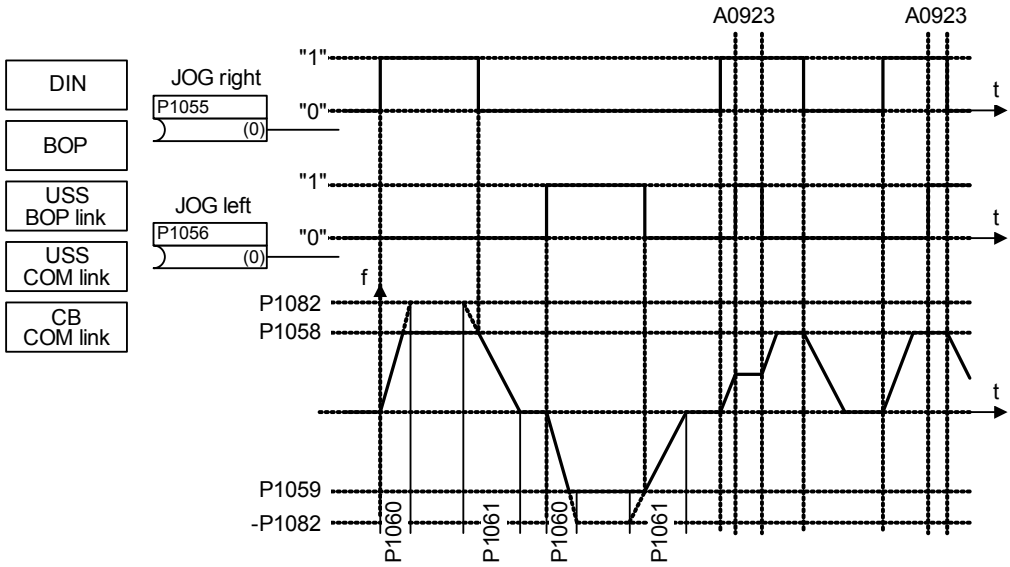

Index:

P1058[0] : 1st. Drive data set (DDS)
P1058[1] : 2nd. Drive data set (DDS)
P1058[2] : 3rd. Drive data set (DDS)

Dependency:

P1060 and P1061 set up and down ramp times respectively for jogging.

P1059[3]	**JOG frequency left**			**Min:** 0.00	Level
	CStat: CUT	**Datatype:** Float	**Unit:** Hz	**Def:** 5.00	**2**
	P-Group: SETPOINT	**Active:** Immediately	**QuickComm.:** No	**Max:** 650.00	

While JOG left is selected, this parameter determines the frequency at which the inverter will run.

Index:

P1059[0] : 1st. Drive data set (DDS)
P1059[1] : 2nd. Drive data set (DDS)
P1059[2] : 3rd. Drive data set (DDS)

Dependency:

P1060 and P1061 set up and down ramp times respectively for jogging.

P1060[3]	**JOG ramp-up time**				**Min:** 0.00	Level
	CStat: CUT	**Datatype:** Float	**Unit:** s		**Def:** 10.00	**2**
	P-Group: SETPOINT	**Active:** first confirm	**QuickComm.:** No		**Max:** 650.00	

Sets jog ramp-up time. This is the time used while jogging is active.

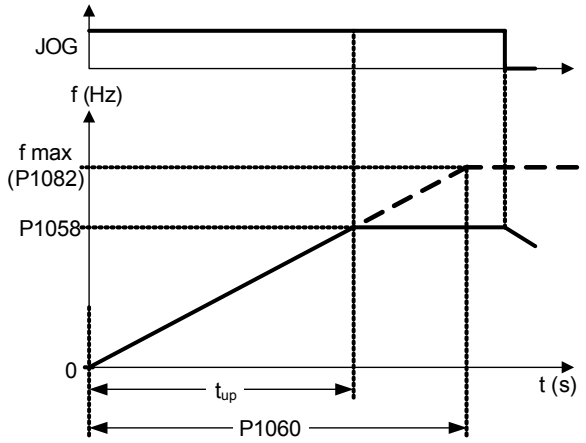

$$t_{up} = \frac{P1058}{P1082} \cdot P1060$$

Index:

P1060[0] : 1st. Drive data set (DDS)
P1060[1] : 2nd. Drive data set (DDS)
P1060[2] : 3rd. Drive data set (DDS)

Notice:

Ramp times will be used as follows:
- P1060 / P1061 : JOG mode is active
- P1120 / P1121 : Normal mode (ON/OFF) is active
- P1060 / P1061 : Normal mode (ON/OFF) and P1124 is active

P1061[3]	**JOG ramp-down time**				**Min:** 0.00	Level
	CStat: CUT	**Datatype:** Float	**Unit:** s		**Def:** 10.00	**2**
	P-Group: SETPOINT	**Active:** first confirm	**QuickComm.:** No		**Max:** 650.00	

Sets ramp-down time. This is the time used while jogging is active.

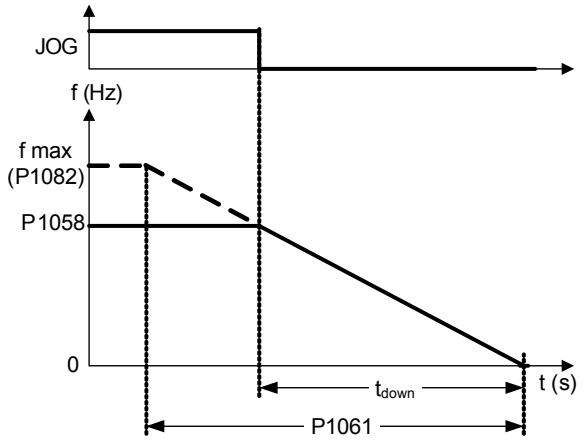

$$t_{down} = \frac{P1058}{P1082} \cdot P1061$$

Index:

P1061[0] : 1st. Drive data set (DDS)
P1061[1] : 2nd. Drive data set (DDS)
P1061[2] : 3rd. Drive data set (DDS)

Notice:

Ramp times will be used as follows:
- P1060 / P1061 : JOG mode is active
- P1120 / P1121 : Normal mode (ON/OFF) is active
- P1060 / P1061 : Normal mode (ON/OFF) and P1124 is active

3.20 Setpoint channel

P1070[3]	CI: Main setpoint				Min: 0:0	Level
	CStat: CT	Datatype: U32	Unit: -		Def: 755:0	3
	P-Group: SETPOINT	Active: first confirm	QuickComm.: No		Max: 4000:0	

Defines source of main setpoint.

Index:

P1070[0] : 1st. Command data set (CDS)
P1070[1] : 2nd. Command data set (CDS)
P1070[2] : 3rd. Command data set (CDS)

Common Settings:

755 = Analog input 1 setpoint
1024 = Fixed frequency setpoint
1050 = Motor potentiometer (MOP) setpoint

P1071[3]	CI: Main setpoint scaling				Min: 0:0	Level
	CStat: CT	Datatype: U32	Unit: -		Def: 1:0	3
	P-Group: SETPOINT	Active: first confirm	QuickComm.: No		Max: 4000:0	

Defines source of the main setpoint scaling.

Index:

P1071[0] : 1st. Command data set (CDS)
P1071[1] : 2nd. Command data set (CDS)
P1071[2] : 3rd. Command data set (CDS)

Common Settings:

755 = Analog input 1 setpoint
1024 = Fixed frequency setpoint
1050 = Motor potentiometer (MOP) setpoint

P1074[3]	BI: Disable additional setpoint				Min: 0:0	Level
	CStat: CUT	Datatype: U32	Unit: -		Def: 0:0	3
	P-Group: COMMANDS	Active: first confirm	QuickComm.: No		Max: 4000:0	

Disables additional setpoint

Index:

P1074[0] : 1st. Command data set (CDS)
P1074[1] : 2nd. Command data set (CDS)
P1074[2] : 3rd. Command data set (CDS)

Common Settings:

722.0 = Digital input 1 (requires P0701 to be set to 99, BICO)
722.1 = Digital input 2 (requires P0702 to be set to 99, BICO)
722.2 = Digital input 3 (requires P0703 to be set to 99, BICO)
722.3 = Digital input 4 (requires P0704 to be set to 99, BICO)
722.4 = Digital input 5 (requires P0705 to be set to 99, BICO)
722.5 = Digital input 6 (requires P0706 to be set to 99, BICO)
722.6 = Digital input 7 (via analog input 1, requires P0707 to be set to 99)
722.7 = Digital input 8 (via analog input 2, requires P0708 to be set to 99))

P1075[3]	CI: Additional setpoint				Min: 0:0	Level
	CStat: CT	Datatype: U32	Unit: -		Def: 0:0	3
	P-Group: SETPOINT	Active: first confirm	QuickComm.: No		Max: 4000:0	

Defines source of the additional setpoint (to be added to main setpoint).

Index:

P1075[0] : 1st. Command data set (CDS)
P1075[1] : 2nd. Command data set (CDS)
P1075[2] : 3rd. Command data set (CDS)

Common Settings:

755 = Analog input 1 setpoint
1024 = Fixed frequency setpoint
1050 = Motor potentiometer (MOP) setpoint

P1076[3]	**CI: Additional setpoint scaling**			**Min:** 0:0	Level
	CStat: CT	**Datatype:** U32	**Unit:** -	**Def:** 1:0	**3**
	P-Group: SETPOINT	**Active:** first confirm	**QuickComm.:** No	**Max:** 4000:0	

Defines source of scaling for additional setpoint (to be added to main setpoint).

Index:

P1076[0] : 1st. Command data set (CDS)
P1076[1] : 2nd. Command data set (CDS)
P1076[2] : 3rd. Command data set (CDS)

Common Settings:

1 = Scaling of 1.0 (100%)
755 = Analog input 1 Setpoint
1024 = Fixed Frequency Setpoint
1050 = MOP Setpoint

r1078	**CO: Total frequency setpoint**			**Min:** -	Level
		Datatype: Float	**Unit:** Hz	**Def:** -	**3**
	P-Group: SETPOINT			**Max:** -	

Displays sum of main and additional setpoints in [Hz].

r1079	**CO: Selected frequency setpoint**			**Min:** -	Level
		Datatype: Float	**Unit:** Hz	**Def:** -	**3**
	P-Group: SETPOINT			**Max:** -	

Displays selected frequency setpoint.

Following frequency setpoints are displayed:
- r1078 Total frequency setpoint
- P1058 JOG frequency right
- P1059 JOG frequency left

Dependency:

P1055 (BI: Enable JOG right) or P1056 (BI: Enable JOG left) define command source of JOG right or JOG left respectively.

Note:

P1055 = 0 and P1056 = 0 ==> Total frequency setpoint is selected.

P1080[3]	**Min. frequency**			**Min:** 0.00	Level
	CStat: CUT	**Datatype:** Float	**Unit:** Hz	**Def:** 0.00	**1**
	P-Group: SETPOINT	**Active:** Immediately	**QuickComm.:** Yes	**Max:** 650.00	

Sets minimum motor frequency [Hz] at which motor will run irrespective of frequency setpoint.

The minimum frequency P1080 represents a masking frequency of 0 Hz for all frequency target value sources (e.g. ADC, MOP, FF, USS), with the exception of the JOG target value source (analogous to P1091). Thus the frequency band +/- P1080 is run through in optimum time by means of the acceleration/deceleration ramps. Dwelling in the frequency band is not possible (see example).

Furthermore, an undershoot of the actual frequency f_act below min. frequency P1080 is output by the following signal function.

Index:

P1080[0] : 1st. Drive data set (DDS)
P1080[1] : 2nd. Drive data set (DDS)
P1080[2] : 3rd. Drive data set (DDS)

Example:

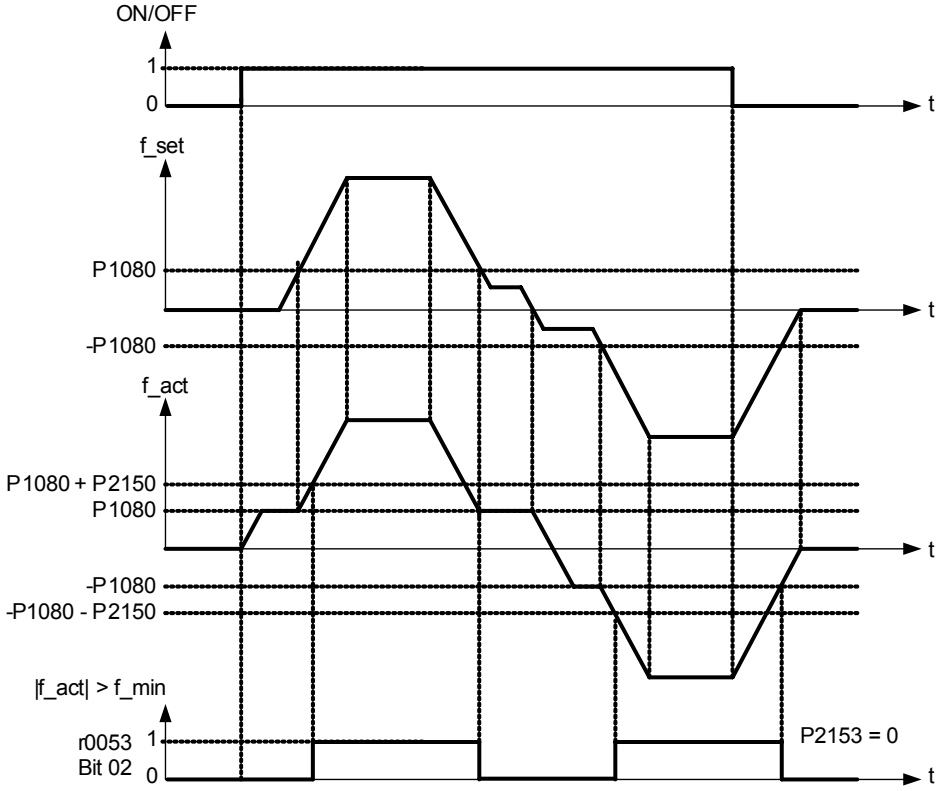

Note:

Value set here is valid both for clockwise and for anticlockwise rotation.

Under certain conditions (e.g. ramping, current limiting), motor can run below minimum frequency.

P1082[3]	**Max. frequency**			**Min:** 0.00	Level
	CStat: CT	**Datatype:** Float	**Unit:** Hz	**Def:** 50.00	**1**
	P-Group: SETPOINT	**Active:** first confirm	**QuickComm.:** Yes	**Max:** 650.00	

Sets maximum motor frequency [Hz] at which motor will run irrespective of the frequency setpoint. The value set here is valid for both clockwise and anticlockwise rotation.

Futhermore, the monitoring function |f_act| >= P1082 (r0052 Bit10, see example below) is affected by this parameter.

Index:

P1082[0] : 1st. Drive data set (DDS)
P1082[1] : 2nd. Drive data set (DDS)
P1082[2] : 3rd. Drive data set (DDS)

Example:

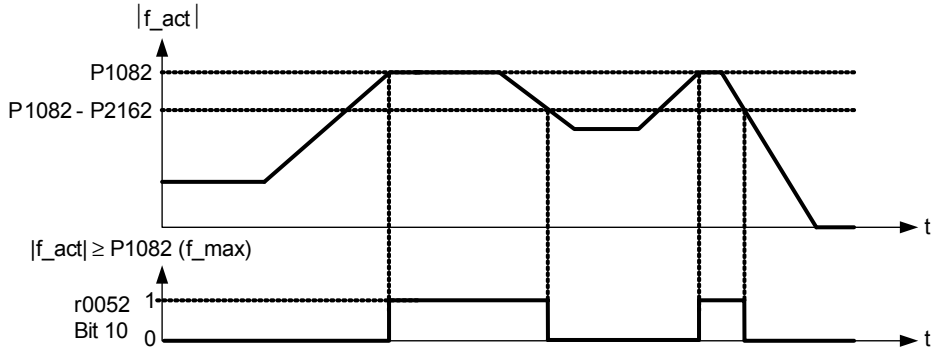

Dependency:

The maximal value of motor frequency P1082 is limited to pulse frequency P1800. P1082 is dependent on the derating characteristic as followed:

	P1800			
	2 kHz	4 kHz	6 kHz	8 - 16 kHz
f_{max} P1082	0 - 133.3 Hz	0 - 266.6 Hz	0 - 400 Hz	0 - 650 Hz

If closed-loop vector control (P1300 > 19) is selected, then the maximum frequency is internally limited by the following equation:

$$f_{max} = \min(P1082, 5 \cdot P0310, 200.00)$$

The resultant value is displayed in r1084 (resultant maximum frequency).

The maximum output frequency of inverter can be exceeded if one of the following is active:

- $p1335 \neq 0$ (Slip compensation active) :

$$fmax(p1335) = fmax + fslip,max = p1082 + \frac{p1336}{100} \cdot \frac{r0330}{100} \cdot p0310$$

- $p1200 \neq 0$ (Flying restart active) :

$$fmax(p1200) = fmax + 2 \cdot fslip,nom = p1082 + 2 \cdot \frac{r0330}{100} \cdot p0310$$

Note:

When using the setpoint source

- Analog Input
- USS
- CB (e.g. PROFIBUS)

The setpoint frequency (in Hz) is cyclically calculated using a percentage value (e.g. for the analog input r0754) or a hexadecimal value (e.g. for the USS r2018[1]) and the reference frequency P2000.

If for example P1082 = 80 Hz, P2000 = 50 Hz and the analog input is parameterised with P0757 = 0 V, P0758 = 0 %, P0759 = 10 V, P0760 = 100 %, a setpoint frequency of 50 Hz will be applied at 10 V of the analog input.

r1084	**Resultant max. frequency**			**Min:** -	Level
		Datatype: Float	**Unit:** Hz	**Def:** -	**3**
	P-Group: CONTROL			**Max:** -	

Displays resultant maximum frequency.

P1300 < 20

$$P1800 \leq 6\ \text{kHz} \rightarrow r1084 = \min(P1082, \frac{P1800}{15}, 650.00)$$

$$P1800 \geq 8\ \text{kHz} \rightarrow r1084 = \min(P1082, 650.00)$$

P1300 ≥ 20

$$r1084 = \min(P1082, 5 \cdot P0310, 200.00)$$

P1091[3]	**Skip frequency 1**			**Min:** 0.00	Level
	CStat: CUT	**Datatype:** Float	**Unit:** Hz	**Def:** 0.00	**3**
	P-Group: SETPOINT	**Active:** Immediately	**QuickComm.:** No	**Max:** 650.00	

Defines skip frequency 1 which avoids effects of mechanical resonance and suppresses frequencies within +/- P1101 (skip frequency bandwidth).

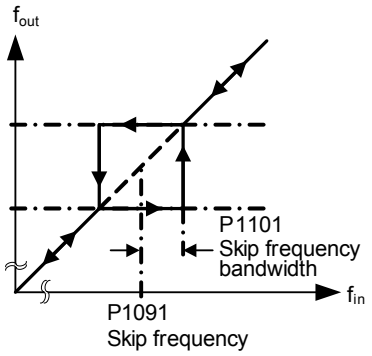

Index:

P1091[0] : 1st. Drive data set (DDS)
P1091[1] : 2nd. Drive data set (DDS)
P1091[2] : 3rd. Drive data set (DDS)

Notice:

- Stationary operation is not possible within the suppressed frequency range; the range is merely passed through (on the ramp).
- For example, if P1091 = 10 Hz and P1101 = 2 Hz, it is not possible to operate continuously between 10 Hz +/- 2 Hz (i.e. between 8 and 12 Hz).

P1092[3]	**Skip frequency 2**			**Min:** 0.00	Level
	CStat: CUT	**Datatype:** Float	**Unit:** Hz	**Def:** 0.00	**3**
	P-Group: SETPOINT	**Active:** Immediately	**QuickComm.:** No	**Max:** 650.00	

Defines skip frequency 2 which avoids effects of mechanical resonance and suppresses frequencies within +/- P1101 (skip frequency bandwidth).

Index:

P1092[0] : 1st. Drive data set (DDS)
P1092[1] : 2nd. Drive data set (DDS)
P1092[2] : 3rd. Drive data set (DDS)

Details:

See P1091 (skip frequency 1).

P1093[3]	**Skip frequency 3**			**Min:** 0.00	Level
	CStat: CUT	**Datatype:** Float	**Unit:** Hz	**Def:** 0.00	**3**
	P-Group: SETPOINT	**Active:** Immediately	**QuickComm.:** No	**Max:** 650.00	

Defines skip frequency 3 which avoids effects of mechanical resonance and suppresses frequencies within +/- P1101 (skip frequency bandwidth).

Index:

P1093[0] : 1st. Drive data set (DDS)
P1093[1] : 2nd. Drive data set (DDS)
P1093[2] : 3rd. Drive data set (DDS)

Details:

See P1091 (skip frequency 1).

P1094[3]	**Skip frequency 4**				**Min:** 0.00	Level
	CStat: CUT	**Datatype:** Float	**Unit:** Hz		**Def:** 0.00	**3**
	P-Group: SETPOINT	**Active:** Immediately	**QuickComm.:** No		**Max:** 650.00	

Defines skip frequency 4 which avoids effects of mechanical resonance and suppresses frequencies within +/- P1101 (skip frequency bandwidth).

Index:

P1094[0] : 1st. Drive data set (DDS)
P1094[1] : 2nd. Drive data set (DDS)
P1094[2] : 3rd. Drive data set (DDS)

Details:

See P1091 (skip frequency 1).

P1101[3]	**Skip frequency bandwidth**				**Min:** 0.00	Level
	CStat: CUT	**Datatype:** Float	**Unit:** Hz		**Def:** 2.00	**3**
	P-Group: SETPOINT	**Active:** Immediately	**QuickComm.:** No		**Max:** 10.00	

Delivers frequency bandwidth to be applied to skip frequencies (in [Hz]).

Index:

P1101[0] : 1st. Drive data set (DDS)
P1101[1] : 2nd. Drive data set (DDS)
P1101[2] : 3rd. Drive data set (DDS)

Details:

See P1091 (skip frequency 1).

P1110[3]	**BI: Inhibit neg. freq. setpoint**				**Min:** 0:0	Level
	CStat: CT	**Datatype:** U32	**Unit:** -		**Def:** 0:0	**3**
	P-Group: COMMANDS	**Active:** first confirm	**QuickComm.:** No		**Max:** 4000:0	

This parameter suppresses negative setpoints. Therefore, modification of the motor direction is inhibited to the setpoint channel.

Index:

P1110[0] : 1st. Command data set (CDS)
P1110[1] : 2nd. Command data set (CDS)
P1110[2] : 3rd. Command data set (CDS)

Common Settings:

0 = Disabled
1 = Enabled

Notice:

Where

- If a min. frequency (P1080) and a negative setpoint are given, the motor is accelerated by a positive value in relationship to the min. frequency.
- This function does not disable the "reverse command functions" (e.g. Reverse, ON left); rather, a reverse command causes motor to run in the positive direction only, as described above.

P1110 = 1

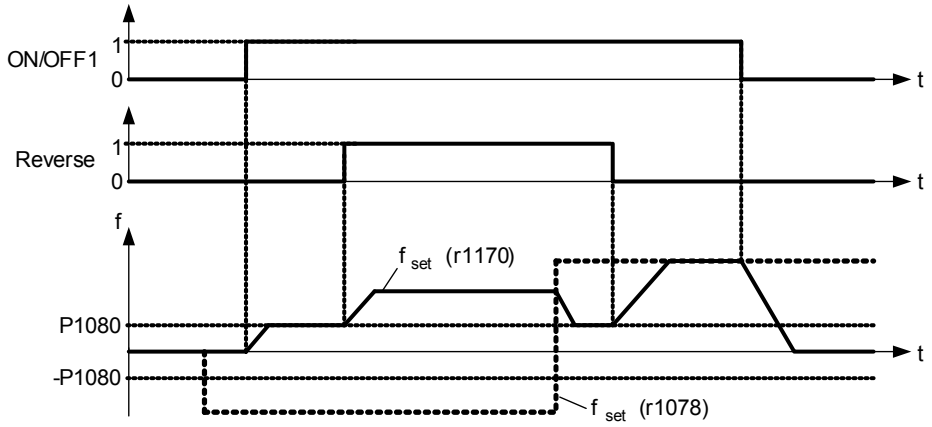

P1113[3]	BI: Reverse				Min: 0:0	Level
	CStat: CT	Datatype: U32	Unit: -		Def: 722:1	3
	P-Group: COMMANDS	Active: first confirm	QuickComm.: No		Max: 4000:0	

Defines source of reverse command.

Index:

P1113[0] : 1st. Command data set (CDS)
P1113[1] : 2nd. Command data set (CDS)
P1113[2] : 3rd. Command data set (CDS)

Common Settings:

722.0 = Digital input 1 (requires P0701 to be set to 99, BICO)
722.1 = Digital input 2 (requires P0702 to be set to 99, BICO)
722.2 = Digital input 3 (requires P0703 to be set to 99, BICO)
722.3 = Digital input 4 (requires P0704 to be set to 99, BICO)
722.4 = Digital input 5 (requires P0705 to be set to 99, BICO)
722.5 = Digital input 6 (requires P0706 to be set to 99, BICO)
19.B = Reverse via BOP

Dependency:

Active only when P0719 < 10. See parameter P0719 (Selection of command/setpoint source).

r1114	CO: Freq. setp. after dir. ctrl.			Min: -	Level
		Datatype: Float	Unit: Hz	Def: -	3
	P-Group: SETPOINT			Max: -	

Displays setpoint frequency after change of direction.

r1119	CO: Freq. setpoint before RFG			Min: -	Level
		Datatype: Float	Unit: Hz	Def: -	3
	P-Group: SETPOINT			Max: -	

Displays output frequency after modification by other functions, e.g.:

- P1110 BI: Inhibit neg. freq. setpoint,
- P1091 - P1094 skip frequencies,
- P1080 Min. frequency,
- P1082 Max. frequency,
- limitations,
- etc.

3.21 Ramp-function generator

P1120[3]	Ramp-up time			Min: 0.00	Level
	CStat: CUT	Datatype: Float	Unit: s	Def: 10.00	1
	P-Group: SETPOINT	Active: first confirm	QuickComm.: Yes	Max: 650.00	

Time taken for motor to accelerate from standstill up to maximum motor frequency (P1082) when no rounding is used.

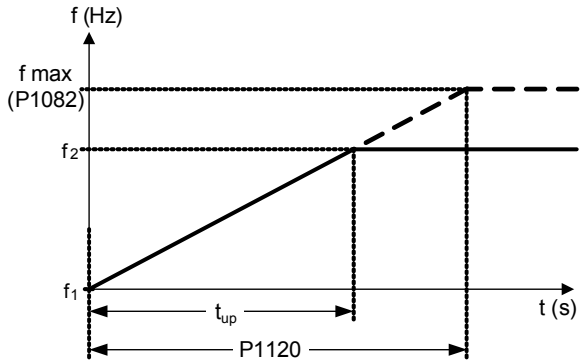

$$t_{up} = \frac{|f_2 - f_1|}{P1082} \cdot P1120$$

Setting the ramp-up time too short can cause the inverter to trip (overcurrent).

Index:

P1120[0] : 1st. Drive data set (DDS)
P1120[1] : 2nd. Drive data set (DDS)
P1120[2] : 3rd. Drive data set (DDS)

Note:

If an external frequency setpoint with set ramp rates is used (e.g. from a PLC). The best way to achieve optimum drive performance is to set ramp times in P1120 and P1121 slightly shorter than those of the PLC.

Notice:

Ramp times will be used as follows:

- P1060 / P1061 : JOG mode is active
- P1120 / P1121 : Normal mode (ON/OFF) is active
- P1060 / P1061 : Normal mode (ON/OFF) and P1124 is active

P1121[3]	**Ramp-down time**			**Min:** 0.00	Level
	CStat: CUT	**Datatype:** Float	**Unit:** s	**Def:** 10.00	**1**
	P-Group: SETPOINT	**Active:** first confirm	**QuickComm.:** Yes	**Max:** 650.00	

Time taken for motor to decelerate from maximum motor frequency (P1082) down to standstill when no rounding is used.

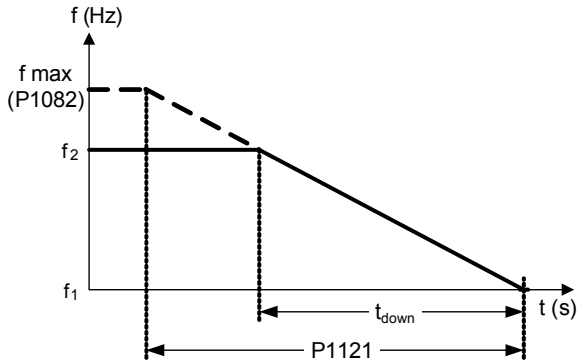

$$t_{down} = \frac{|f_2 - f_1|}{P1082} \cdot P1121$$

Index:

P1121[0] : 1st. Drive data set (DDS)
P1121[1] : 2nd. Drive data set (DDS)
P1121[2] : 3rd. Drive data set (DDS)

Notice:

Setting the ramp-down time too short can cause the inverter to trip (overcurrent (F0001) / overvoltage (F0002)).

Ramp times will be used as follows:
- P1060 / P1061 : JOG mode is active
- P1120 / P1121 : Normal mode (ON/OFF) is active
- P1060 / P1061 : Normal mode (ON/OFF) and P1124 is active

P1124[3]	**BI: Enable JOG ramp times**			**Min:** 0:0	Level
	CStat: CT	**Datatype:** U32	**Unit:** -	**Def:** 0:0	**3**
	P-Group: COMMANDS	**Active:** first confirm	**QuickComm.:** No	**Max:** 4000:0	

Defines source for switching between jog ramp times (P1060, P1061) and normal ramp times (P1120, P1121) as applied to the RFG. This parameter is valid for normal mode (ON/OFF) only.

Index:

P1124[0] : 1st. Command data set (CDS)
P1124[1] : 2nd. Command data set (CDS)
P1124[2] : 3rd. Command data set (CDS)

Common Settings:

722.0 = Digital input 1 (requires P0701 to be set to 99, BICO)
722.1 = Digital input 2 (requires P0702 to be set to 99, BICO)
722.2 = Digital input 3 (requires P0703 to be set to 99, BICO)
722.3 = Digital input 4 (requires P0704 to be set to 99, BICO)
722.4 = Digital input 5 (requires P0705 to be set to 99, BICO)
722.5 = Digital input 6 (requires P0706 to be set to 99, BICO)

Notice:

P1124 does not have any impact when JOG mode is selected. In this case, jog ramp times (P1060, P1061) will be used all the time.

Ramp times will be used as follows:
- P1060 / P1061 : JOG mode is active
- P1120 / P1121 : Normal mode (ON/OFF) is active
- P1060 / P1061 : Normal mode (ON/OFF) and P1124 is active

P1130[3]	**Ramp-up initial rounding time**			**Min:** 0.00	Level
	CStat: CUT	**Datatype:** Float	**Unit:** s	**Def:** 0.00	**2**
	P-Group: SETPOINT	**Active:** first confirm	**QuickComm.:** No	**Max:** 40.00	

Defines initial rounding time in seconds as shown on the diagram below.

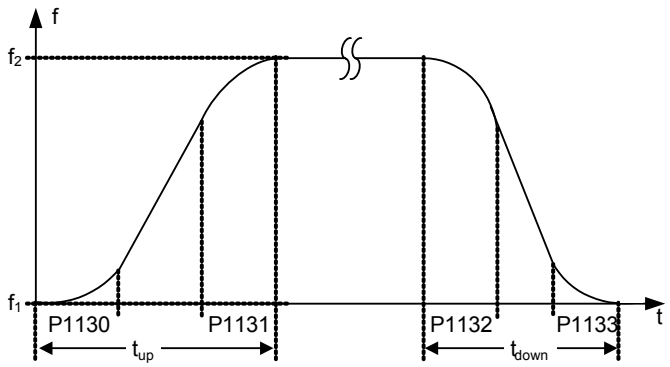

where:

for $\frac{f_2 - f_1}{P1082} \cdot P1120 \geq \frac{1}{2}(P1130 + P1131)$

$$t_{up} = \frac{1}{2}(P1130 + P1131) + \frac{f_2 - f_1}{P1082} \cdot P1120$$

for $\frac{f_2 - f_1}{P1082} \cdot P1121 \geq \frac{1}{2}(P1132 + P1133)$

$$t_{down} = \frac{1}{2}(P1132 + P1133) + \frac{f_2 - f_1}{P1082} \cdot P1121$$

Index:

P1130[0] : 1st. Drive data set (DDS)
P1130[1] : 2nd. Drive data set (DDS)
P1130[2] : 3rd. Drive data set (DDS)

Note:

- If short or zero ramp times (P1120, P1121 < P1130, P1131, P1132, P1133) are set, the total ramp up time (t_up) or ramp down time (t_down) will not depend on P1130.
- See equations above for valid conditions to calculate t_up and t_down.
- Rounding times are recommended, since they prevent an abrupt response, thus avoiding detrimental effects on the mechanics.
- Rounding times are not recommended when analog inputs are used, since they would result in overshoot/undershoot in the inverter response.

P1131[3]	**Ramp-up final rounding time**			**Min:** 0.00	Level
	CStat: CUT	**Datatype:** Float	**Unit:** s	**Def:** 0.00	**2**
	P-Group: SETPOINT	**Active:** first confirm	**QuickComm.:** No	**Max:** 40.00	

Defines rounding time at end of ramp-up as shown in P1130 (ramp-up initial rounding time).

Index:

P1131[0] : 1st. Drive data set (DDS)
P1131[1] : 2nd. Drive data set (DDS)
P1131[2] : 3rd. Drive data set (DDS)

Details:

See parameter P1130.

P1132[3]	**Ramp-down initial rounding time**			**Min:** 0.00	Level
	CStat: CUT	**Datatype:** Float	**Unit:** s	**Def:** 0.00	**2**
	P-Group: SETPOINT	**Active:** first confirm	**QuickComm.:** No	**Max:** 40.00	

Defines rounding time at start of ramp-down as shown in P1130 (ramp-up initial rounding time).

Index:

P1132[0] : 1st. Drive data set (DDS)
P1132[1] : 2nd. Drive data set (DDS)
P1132[2] : 3rd. Drive data set (DDS)

Details:

See parameter P1130.

P1133[3]	**Ramp-down final rounding time**			**Min:** 0.00	Level
	CStat: CUT	**Datatype:** Float	**Unit:** s	**Def:** 0.00	**2**
	P-Group: SETPOINT	**Active:** first confirm	**QuickComm.:** No	**Max:** 40.00	

Defines rounding time at end of ramp-down as shown in P1130 (ramp-up initial rounding time).

Index:

P1133[0] : 1st. Drive data set (DDS)
P1133[1] : 2nd. Drive data set (DDS)
P1133[2] : 3rd. Drive data set (DDS)

Details:

See parameter P1130.

P1134[3]	**Rounding type**			**Min:** 0	Level
	CStat: CUT	**Datatype:** U16	**Unit:** -	**Def:** 0	**2**
	P-Group: SETPOINT	**Active:** Immediately	**QuickComm.:** No	**Max:** 1	

Defines the smoothing which is active by setpoint modifications during acceleration or deceleration (e.g. new setpoint, OFF1, OFF3, REV).

This smoothing is applied, if the motor is ramped-up or ramped-down and
- P1134 = 0,
- P1132 > 0, P1133 > 0 and
- the setpoint is not yet reached.

P1132 > 0, P1133 > 0

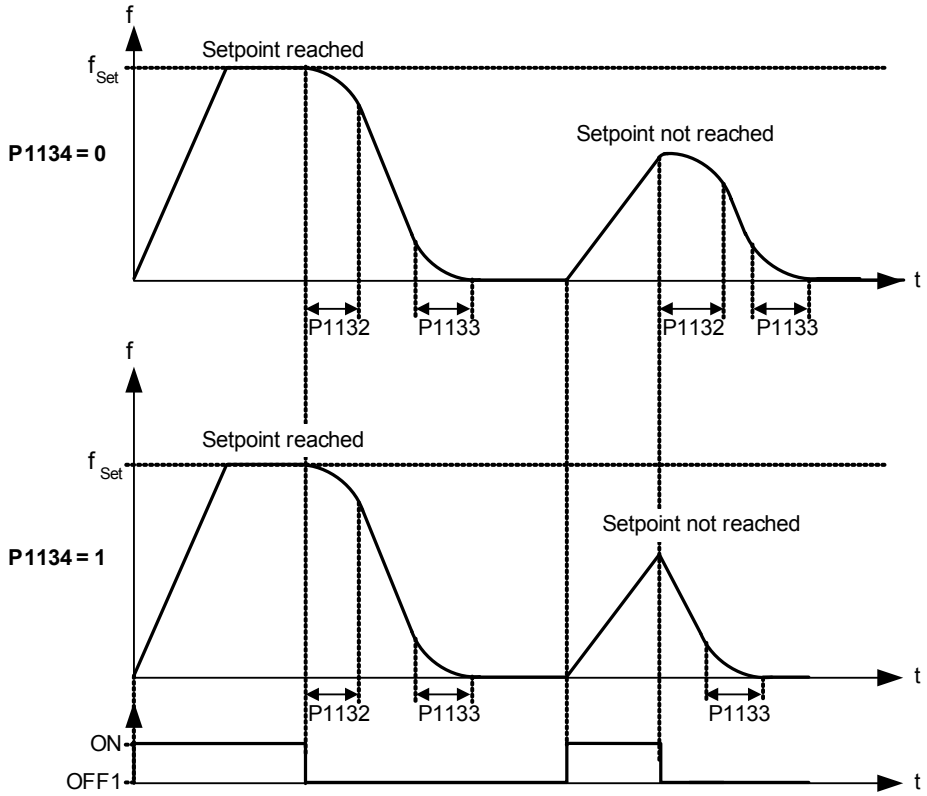

Possible Settings:

0 Continuous smoothing
1 Discontinuous smoothing

Index:

P1134[0] : 1st. Drive data set (DDS)
P1134[1] : 2nd. Drive data set (DDS)
P1134[2] : 3rd. Drive data set (DDS)

Dependency:

No effect until P1132 (Ramp-down initial rounding time) or P1133 (Ramp-down final rounding time) > 0 s.

P1135[3]	**OFF3 ramp-down time**			**Min:** 0.00	Level
	CStat: CUT	**Datatype:** Float	**Unit:** s	**Def:** 5.00	**2**
	P-Group: SETPOINT	**Active:** first confirm	**QuickComm.:** Yes	**Max:** 650.00	

Defines ramp-down time from maximum frequency to standstill for OFF3 command.

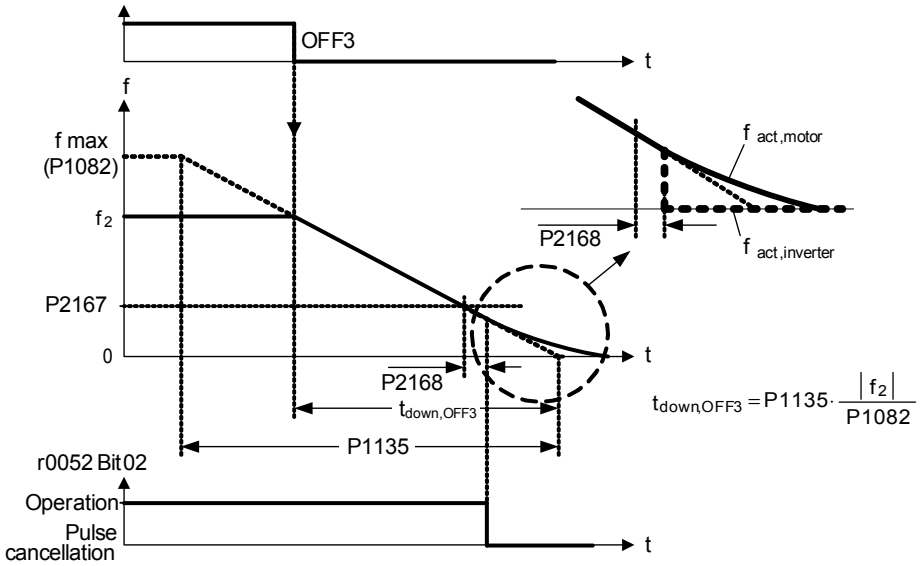

Index:

P1135[0] : 1st. Drive data set (DDS)
P1135[1] : 2nd. Drive data set (DDS)
P1135[2] : 3rd. Drive data set (DDS)

Note:

This time may be exceeded if the VDC_max. level is reached.

P1140[3]	**BI: RFG enable**			**Min:** 0:0	Level
	CStat: CT	**Datatype:** U32	**Unit:** -	**Def:** 1:0	**3**
	P-Group: COMMANDS	**Active:** first confirm	**QuickComm.:** No	**Max:** 4000:0	

Defines command source of RFG enable command (RFG: ramp function generator). If binary input is equal to zero then the RFG output will be set immediately to 0.

Index:

P1140[0] : 1st. Command data set (CDS)
P1140[1] : 2nd. Command data set (CDS)
P1140[2] : 3rd. Command data set (CDS)

P1141[3]	**BI: RFG start**			**Min:** 0:0	Level
	CStat: CT	**Datatype:** U32	**Unit:** -	**Def:** 1:0	**3**
	P-Group: COMMANDS	**Active:** first confirm	**QuickComm.:** No	**Max:** 4000:0	

Defines command source of RFG start command (RFG: ramp function generator). If binary input is equal to zero then the RFG output is held at it present value.

Index:

P1141[0] : 1st. Command data set (CDS)
P1141[1] : 2nd. Command data set (CDS)
P1141[2] : 3rd. Command data set (CDS)

P1142[3]	**BI: RFG enable setpoint**			**Min:** 0:0	Level
	CStat: CT	**Datatype:** U32	**Unit:** -	**Def:** 1:0	**3**
	P-Group: COMMANDS	**Active:** first confirm	**QuickComm.:** No	**Max:** 4000:0	

Defines command source of RFG enable setpoint command (RFG: ramp function generator). If binary input is equal to zero then the RFG input will be set to zero and the RFG output will be ramp-down to zero.

Index:

P1142[0] : 1st. Command data set (CDS)
P1142[1] : 2nd. Command data set (CDS)
P1142[2] : 3rd. Command data set (CDS)

r1170	**CO: Frequency setpoint after RFG**			**Min:** -	Level
		Datatype: Float	**Unit:** Hz	**Def:** -	**3**
	P-Group: SETPOINT			**Max:** -	

Displays overall frequency setpoint after ramp generator.

3.22 Flying restart

P1200	**Flying start**				**Min:** 0	Level
	CStat: CUT	**Datatype:** U16	**Unit:** -		**Def:** 0	**2**
	P-Group: FUNC	**Active:** first confirm	**QuickComm.:** No		**Max:** 6	

Starts inverter onto a spinning motor by rapidly changing the output frequency of the inverter until the actual motor speed has been found. Then, the motor runs up to setpoint using the normal ramp time.

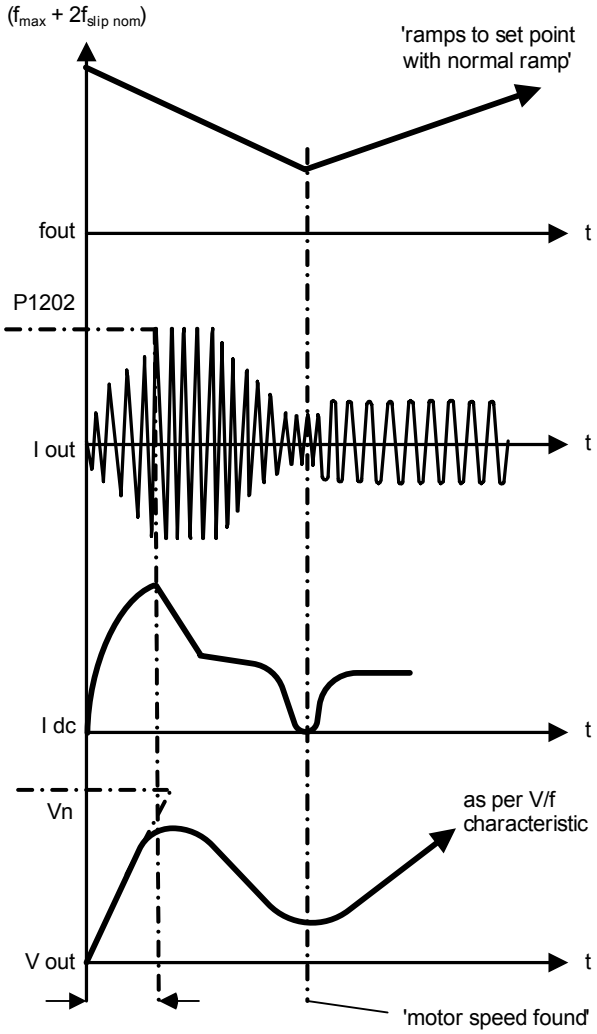

Possible Settings:

0 Flying start disabled
1 Flying start is always active, start in direction of setpoint
2 Flying start is active if power on, fault, OFF2, start in direction of setpoint
3 Flying start is active if fault, OFF2, start in direction of setpoint
4 Flying start is always active, only in direction of setpoint
5 Flying start is active if power on, fault, OFF2, only in direction of setpoint
6 Flying start is active if fault, OFF2, only in direction of setpoint

Note:

- Useful for motors with high inertia loads.
- Settings 1 to 3 search in both directions.
- Settings 4 to 6 search only in direction of setpoint.
- Flying start must be used in cases where the motor may still be turning (e.g. after a short mains break) or can be driven by the load. Otherwise, overcurrent trips will occur.

P1202[3]	**Motor-current: Flying start**			**Min:** 10	Level
	CStat: CUT	**Datatype:** U16	**Unit:** %	**Def:** 100	**3**
	P-Group: FUNC	**Active:** first confirm	**QuickComm.:** No	**Max:** 200	

Defines search current used for flying start. Value is in [%] based on rated motor current (P0305).

Index:

P1202[0] : 1st. Drive data set (DDS)
P1202[1] : 2nd. Drive data set (DDS)
P1202[2] : 3rd. Drive data set (DDS)

Note:

- If the search current is reduced, the flying restart behavior can be improved if the system inertia is not very high.

- The search algorithm for the flying restart is different for V/f control and closed-loop vector control.
- This is the reason that, depending on the control technique, parameter P1202 must be appropriately adapted.
- Values gained from experience indicate that good results can be achieved by
  - Increasing P1202 for V/f controls
  - Reducing P1202 for closed-loop vector controls

P1203[3]	**Search rate: Flying start**			**Min:** 10	Level
	CStat: CUT	**Datatype:** U16	**Unit:** %	**Def:** 100	**3**
	P-Group: FUNC	**Active:** first confirm	**QuickComm.:** No	**Max:** 200	

Sets factor by which the output frequency changes during flying start to synchronize with turning motor. This value is entered in [%] defines the reciprocal initial gradient in the search sequence (see curve below). Parameter P1203 influences the time taken to search for the motor frequency.

The search time is the time taken to search through all frequencies between max. frequency P1082 + 2 x f_slip to 0 Hz.

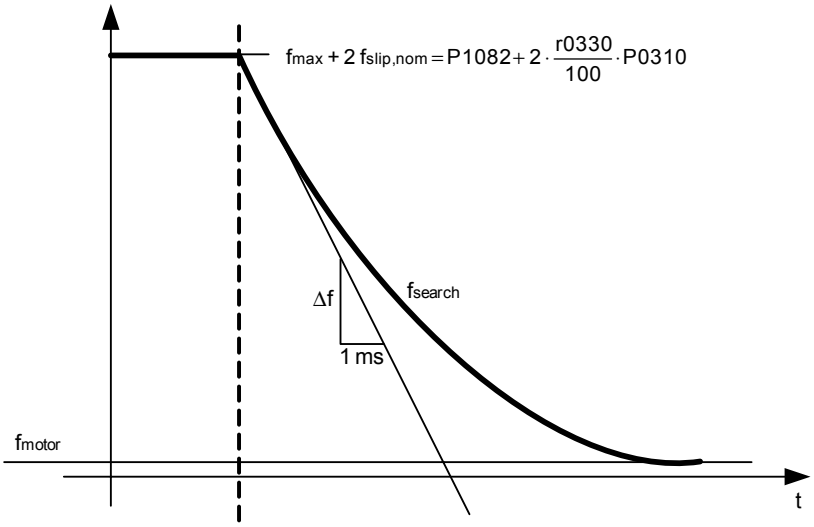

$$P1203[\%] = \frac{\Delta t\,[ms]}{\Delta f\,[Hz]} \cdot \frac{f_{slip,nom}\,[Hz]}{1[ms]} \cdot 2\,[\%] \quad \Rightarrow \quad \Delta f = \frac{2\,[\%]}{P1203[\%]} \cdot \frac{r0330}{100} \cdot P0310$$

P1203 = 100 % is defined as giving a rate of 2 % of f_slip,nom / [ms].
P1203 = 200 % would result in a rate of frequency change of 1 % of f_slip,nom / [ms].

Index:

P1203[0] : 1st. Drive data set (DDS)
P1203[1] : 2nd. Drive data set (DDS)
P1203[2] : 3rd. Drive data set (DDS)

Example:

For a motor with 50 Hz, 1350 rpm, 100 % would produce a maximum search time of 600 ms. If the motor is turning, the motor frequency is found in a shorter time.

Note:

- A higher value produces a flatter gradient and thus a longer search time.
- A lower value has the opposite effect.

- For closed-loop vector control, parameter P1203 is de-activated

r1204	**Status word: Flying start V/f**			**Min:** -	Level
		Datatype: U16	**Unit:** -	**Def:** -	**4**
	P-Group: FUNC			**Max:** -	

Bit parameter for checking and monitoring states during search, if V/f control mode is selected (see P1300).

Bitfields:

Bit00	Current applied	0	NO	1	YES
Bit01	Current could not be applied	0	NO	1	YES
Bit02	Voltage reduced	0	NO	1	YES
Bit03	Slope-filter started	0	NO	1	YES
Bit04	Current less threshold	0	NO	1	YES
Bit05	Current-minimum	0	NO	1	YES
Bit07	Speed could not be found	0	NO	1	YES

r1205	**Status word: Flying start SLVC**			**Min:** -	Level
		Datatype: U16	**Unit:** -	**Def:** -	**3**
	P-Group: FUNC			**Max:** -	

Bit parameter for checking status of flying start performed with n-adaption of observer. Parameter is only valid, if sensorless vector control (SLVC) is selected (see P1300).

Bitfields:

Bit00	Transformation active	0	NO	1	YES
Bit01	Initialize n-adaption	0	NO	1	YES
Bit02	Current applying	0	NO	1	YES
Bit03	N-controller closed	0	NO	1	YES
Bit04	Isd-controller open	0	NO	1	YES
Bit05	RFG hold	0	NO	1	YES
Bit06	N-adaption set to zero	0	NO	1	YES
Bit07	Reserved	0	NO	1	YES
Bit08	Reserved	0	NO	1	YES
Bit09	Reserved	0	NO	1	YES
Bit10	Direction Positive	0	NO	1	YES
Bit11	Search is started	0	NO	1	YES
Bit12	Current is applied	0	NO	1	YES
Bit13	Search is aborted	0	NO	1	YES
Bit14	Deviation is zero	0	NO	1	YES
Bit15	N-controller is active	0	NO	1	YES

3.23 Automatic restart

P1210	Automatic restart				Min: 0	Level
	CStat: CUT	Datatype: U16	Unit: -		Def: 1	2
	P-Group: FUNC	Active: first confirm	QuickComm.: No		Max: 6	

Configures automatic restart function

Possible Settings:

0	Disabled	
1	Trip reset after power on,	P1211 disabled
2	Restart after mains blackout,	P1211 disabled
3	Restart after mains brownout or fault,	P1211 enabled
4	Restart after mains brownout,	P1211 enabled
5	Restart after mains blackout and fault,	P1211 disabled
6	Restart after mains brown- /blackout or fault	P1211 disabled

Dependency:

Automatic restart requires constant ON command via a digital input wire link.

Caution:

P1210 > 2 can cause the motor to restart automatically without toggling the ON command !

Notice:

A "mains brownout" is where the power in interrupted and re-applied before the display on the BOP (if one is fitted to the inverter) has gone dark (a very short mains break where the DC link has not fully collapsed).

A "mains blackout" is where the display has gone dark (a long mains break where the DC link has fully collapsed) before the power is re-applied.

P1210 = 0:
Automatic restart is disabled.

P1210 = 1:
The inverter will acknowledge (reset) faults i.e. it will reset a fault when the is re-applied. This means the inverter must be fully powered down, a brownout is not sufficed. The inverter will not run until the ON command has been toggled.

P1210 = 2:
The inverter will acknowledge the fault F0003 at power on after blackout and restarts the drive. It is necessary that the ON command is wired via digital input (DIN).

P1210 = 3:
For these settings it is fundamental that the drive only restarts if it has been in a RUN state at the time of the faults (F0003, etc.). The inverter will acknowledge the fault and restarts the drive after a blackout or bronwout. It is necessary that the ON command is wired via digital input (DIN).

P1210 = 4:
For these settings it is fundamental that the drive only restarts if it has been in a RUN state at the time of the fault (F0003). The inverter will acknowledge the fault and restarts the drive after a blackout or bronwout. It is necessary that the ON command is wired via digital input (DIN).

P1210 = 5:
The inverter will acknowledge the faults F0003 etc. at power on after blackout and restarts the drive. It is necessary that the ON command is wired via digital input (DIN).

P1210 = 6:
The inverter will acknowledge the faults (F0003 etc.) at power on after blackout or brownout and restarts the drive. It is necessary that the ON command is wired via digital input (DIN). Setting 6 causes the motor to restart immediately.

Following table presents an overview of parameter P1210 and its functionality.

P1210	ON always active (permanent)				ON in no-voltage condition	
	Fault F0003 on		All other faults on		All faults on	No faults on
	Blackout	Brownout	Blackout	Brownout	Blackout	Blackout
0	–	–	–	–	–	–
1	Fault acknowl.	–	Fault acknowl.	–	Fault acknowl.	–
2	Fault acknowl. + restart	–	–	–	–	Restart
3	Fault acknowl. + restart	Fault acknowl. + restart	Fault acknowl. + restart	Fault acknowl. + restart	Fault acknowl. + restart	–
4	Fault acknowl. + restart	Fault acknowl. + restart	–	–	–	–
5	Fault acknowl. + restart	–	Fault acknowl. + restart	–	Fault acknowl. + restart	Restart
6	Fault acknowl. + restart	Fault acknowl. + restart	Fault acknowl. + restart	Fault acknowl. + restart	Fault acknowl. + restart	Restart

Flying start must be used in cases where the motor may still be turning (e.g. after a short mains break) or can be driven by the load (P1200).

P1211 Number of restart attempts

CStat:	CUT	**Datatype:** U16	**Unit:** -	**Min:**	0	Level	
P-Group:	FUNC	**Active:** first confirm	**QuickComm.:** No	**Def:**	3	**3**	
				Max:	10		

Specifies number of times inverter will attempt to restart if automatic restart P1210 is activated.

3.24 Motor holding brake

P1215	Holding brake enable			Min: 0	Level
	CStat: T	Datatype: U16	Unit: -	Def: 0	2
	P-Group: FUNC	Active: first confirm	QuickComm.: No	Max: 1	

Enables/disables holding brake function. This function applies the following profile to the inverter:

ON / OFF1/OFF3:

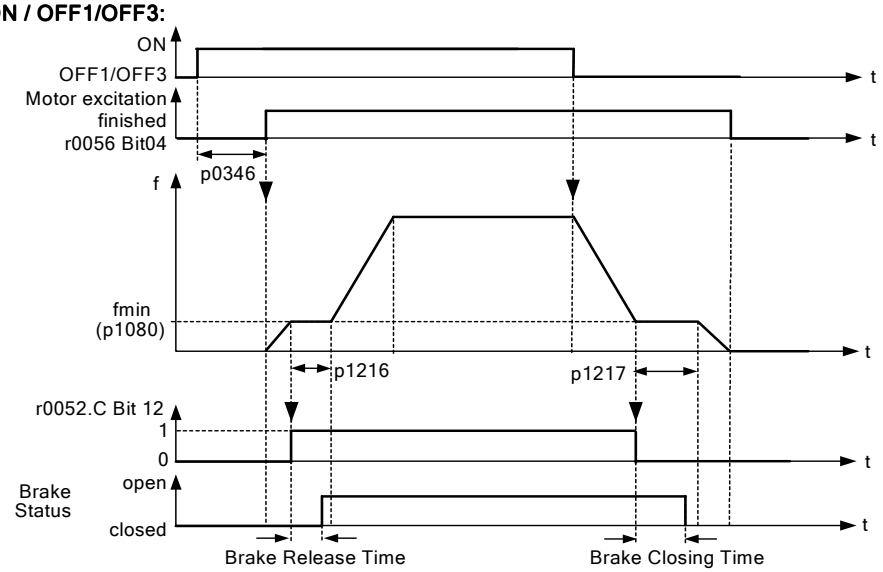

ON / OFF2:

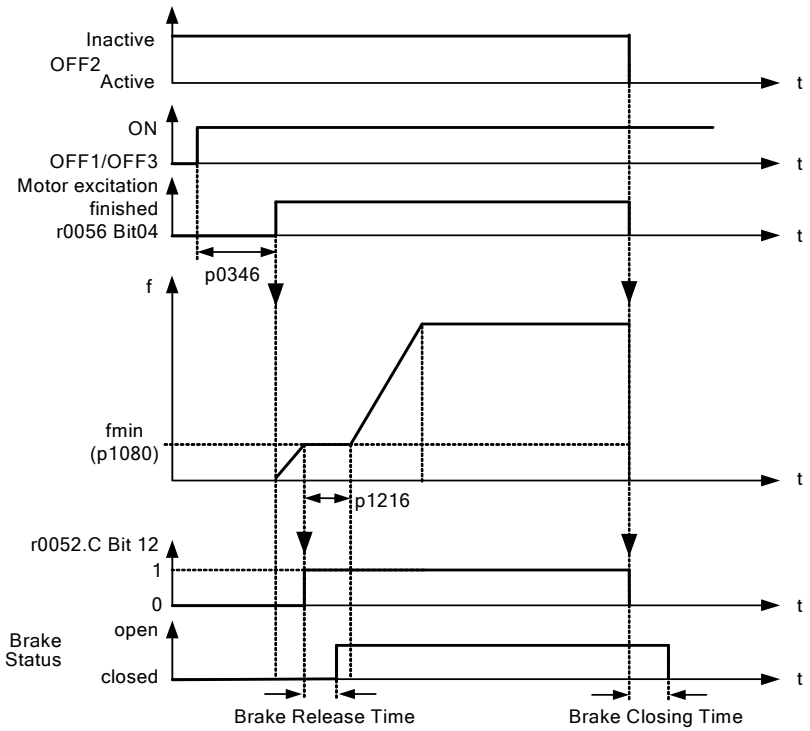

Possible Settings:

0 Motor holding brake disabled
1 Motor holding brake enabled

Caution:

1. To activate the motor holding brake, in addition to parameter P1215 = 1, the status signal r0052 bit 12 "motor holding brake active" must be output via a digital output. The user must also select the signal - e.g. in parameter P0731.

2. If the motor holding brake is controlled by the drive inverter, then for potentially hazardous loads (e.g. suspended/hanging loads for crane applications) the drive inverter may not be conditioned unless the load has been secured. Before commissioning, potentially hazardous loads can be secured as follows:
   - lower the load to the floor, or
   - during commissioning or after replacing the drive inverter, prevent the drive inverter from controlling the motor holding brake. Only then should STARTER be used to carry-out a quick commissioning or a parameter download, etc. The motor holding brake terminals can then be re-used (for the motor holding brake, in this case, it is not permissible to parameterize the system so that the digital output P0748 is inverted).

3. In order to hold the motor against the mechanical brake at a certain frequency, it is important that the min. frequency P1080 approximately corresponds to the slip frequency.
   - If the value is selected to be too high, then the current drawn can be too high so that the drive inverter trips (shuts down) due to an overcurrent condition.
   - For a low value, it is possible that the torque cannot be established to hold the load.

4. It is not permissible to use the motor holding brake as operating brake as generally it is only designed and dimensioned for a limited number of emergency braking operations.

Note:

Parameter settings:
- To open/close, a digital output controls the motor holding brake at point 1/2 (refer to the diagram). In this case, as prerequisite, the motor holding brake P1215 must be activated as well as the motor holding brake selected at the digital output.
- Brake opening time P1216 greater than/equal to the time for the holding brake to open.
- Brake delay time P1217 greater than/equal to the time to close the holding brake.
- Select the minimum frequency P1080 so that it acts like weight equalization.
- A typical value of the minimum frequency P1080 for the motor holding brake is the slip frequency of the motor r0330. The rated slip frequency can be calculated using the following formula:

$$f_{Slip}[Hz] = \frac{r0330}{100} \cdot P0310 = \frac{n_{syn} - n_n}{n_{syn}} \cdot f_n$$

The following closed-loop control parameters should be observed in conjunction with the motor holding brake:
- P1310, P1311, P1333, P1335 for U/f
- P1610, P1611, P1750, P1755 for SLVC

P1216	**Holding brake release delay**			**Min:** 0.0	Level
	CStat: T	**Datatype:** Float	**Unit:** s	**Def:** 1.0	**2**
	P-Group: FUNC	**Active:** first confirm	**QuickComm.:** No	**Max:** 20.0	

Defines the brake opening time of the motor holding brake (MHB).

When the motor holding brake (P1215) is activated, then the setpoint enable is delayed by the selected time. The time that it takes to open the mechanical brake is subject to certain fluctuations. This is the reason that the drive inverter applies the min. frequency P1080 to the motor during this time. This means that the brake can reliably open before the motor starts.

$$P1216 \geq \text{Release time of the brake} + \text{relay opening time(s)}$$

Details:

See parameter P1215.

P1217	**Holding time after ramp down**			**Min:** 0.0	Level
	CStat: T	**Datatype:** Float	**Unit:** s	**Def:** 1.0	**2**
	P-Group: FUNC	**Active:** first confirm	**QuickComm.:** No	**Max:** 20.0	

Defines the brake delay time of the motor holding brake (MHB).

When the motor holding brake (P1215) is activated, after an off command, the pulse inhibit is delayed by this selected time. The time that it takes to open the mechanical brake is subject to certain fluctuations. This means that after braking to the min. frequency P1080, the motor is held at the minimum frequency for this time. This means that the brake can reliably close before the motor is switched into a no-current condition.

$$P1217 \geq \text{Application time of the brake} + \text{relay closing time}$$

Details:

See parameter P1215.

3.25 DC braking

P1230[3]	BI: Enable DC braking				Min: 0:0	Level
	CStat: CUT	Datatype: U32	Unit: -		Def: 0:0	3
	P-Group: COMMANDS	Active: first confirm	QuickComm.: No		Max: 4000:0	

Enables DC braking via a signal applied from an external source. Function remains active while external input signal is active.

DC braking causes the motor to stop rapidly by applying a DC braking current (current applied also holds shaft stationary).

When the DC braking signal is applied, the inverter output pulses are blocked and the DC current is not applied until the motor has been sufficiently demagnetized.

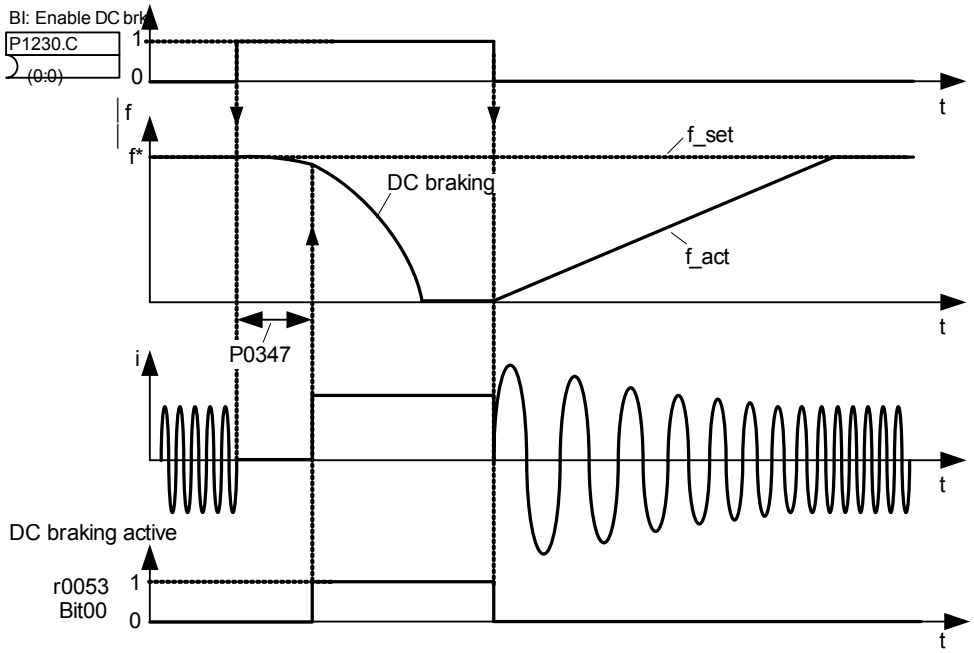

Note: DC brake can be applied in drive states r0002 = 1, 4, 5

The level of DC braking is set in P1232 (DC braking current - relative to the rated motor current) which is set to 100 % by default.

Index:

P1230[0] : 1st. Command data set (CDS)
P1230[1] : 2nd. Command data set (CDS)
P1230[2] : 3rd. Command data set (CDS)

Common Settings:

722.0 = Digital input 1 (requires P0701 to be set to 99, BICO)
722.1 = Digital input 2 (requires P0702 to be set to 99, BICO)
722.2 = Digital input 3 (requires P0703 to be set to 99, BICO)
722.3 = Digital input 4 (requires P0704 to be set to 99, BICO)
722.4 = Digital input 5 (requires P0705 to be set to 99, BICO)
722.5 = Digital input 6 (requires P0706 to be set to 99, BICO)
722.6 = Digital input 7 (via analog input 1, requires P0707 to be set to 99)
722.7 = Digital input 8 (via analog input 2, requires P0708 to be set to 99)

Caution:

With the DC braking, the kinetic energy of the motor is converted into heat in the motor. The drive could overheat if the remains in this status for an exessive period of time !

DC braking is not possible when using a synchronous motor (i.e. P0300 = 2).

Notice:

This delay time is set in P0347 (demagnetization time). If this delay is too short, overcurrent trips can occur.

P1232[3]	**DC braking current**			**Min:** 0	Level
	CStat: CUT	**Datatype:** U16	**Unit:** %	**Def:** 100	**2**
	P-Group: FUNC	**Active:** Immediately	**QuickComm.:** No	**Max:** 250	

Defines level of DC current in [%] relative to rated motor current (P0305).

$$r0027_{DC-Brake}[A] \approx \frac{1}{\sqrt{2}} \cdot P0305 \cdot \frac{P1232}{100\%}$$

The current of the DC-braking is limited by r0067.

Index:

P1232[0] : 1st. Drive data set (DDS)
P1232[1] : 2nd. Drive data set (DDS)
P1232[2] : 3rd. Drive data set (DDS)

P1233[3]	**Duration of DC braking**			**Min:** 0.00	Level
	CStat: CUT	**Datatype:** Float	**Unit:** s	**Def:** 0.00	**2**
	P-Group: FUNC	**Active:** Immediately	**QuickComm.:** No	**Max:** 250.00	

Defines duration for which DC injection braking is to be active following an OFF1 or OFF3 command. When an OFF1 or OFF3 command is received by the drive, the output frequency starts to ramp to 0 Hz. When the output frequency reaches the value set in P1234, the drive injects a DC braking current P1232 for the time duration set in P1233.

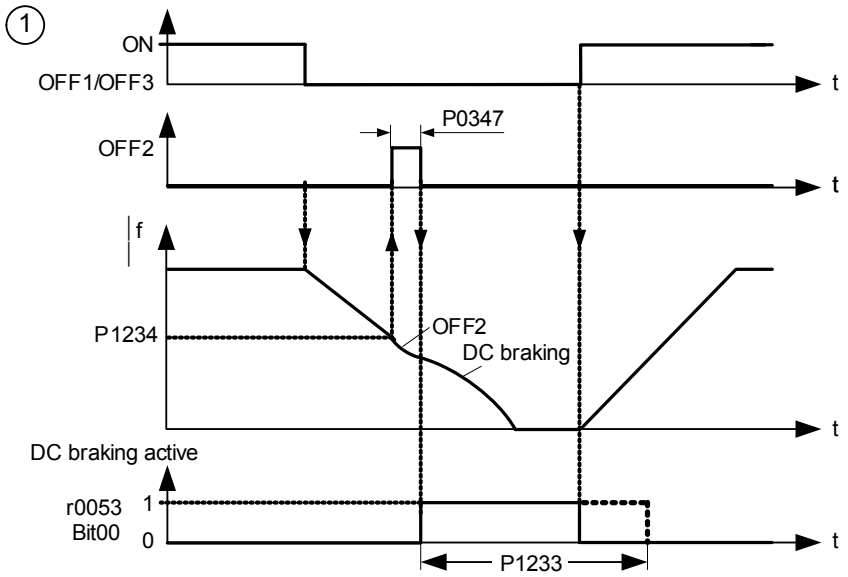

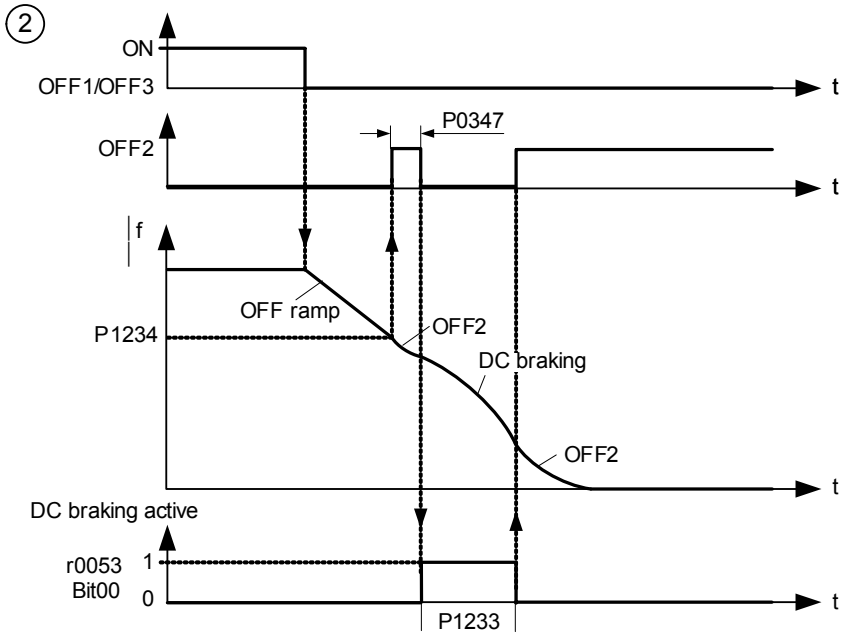

The DC current, that is impressed during time P1233, is specified by parameter P1232.

Index:

P1233[0] : 1st. Drive data set (DDS)
P1233[1] : 2nd. Drive data set (DDS)
P1233[2] : 3rd. Drive data set (DDS)

Value:

P1233 = 0.00 :
Not active following OFF1 / OFF3.

P1233 = 0.01 - 250.00 :
Active for the specified duration.

Caution:

With the DC braking, the kinetic energy of the motor is converted into heat in the motor. The drive could overheat if the remains in this status for an exessive period of time !

DC braking is not possible when using a synchronous motor (i.e. P0300 = 2).

Notice:

The DC braking function causes the motor to stop rapidly by applying a DC braking current (the current applied also holds the shaft stationary). When the DC braking signal is applied, the inverter output pulses are blocked and the DC current not applied until the motor has been sufficiently demagnetized. Demagnetization time is calculated automatically from motor data.

The inverter will not restart if an ON-command is given during this period.

P1234[3]	**DC braking start frequency**			**Min:** 0.00	Level
	CStat: CUT	**Datatype:** Float	**Unit:** Hz	**Def:** 650.00	**2**
	P-Group: FUNC	**Active:** Immediately	**QuickComm.:** No	**Max:** 650.00	

Sets start frequency for DC braking.

When an OFF1 or OFF3 command is received by the drive, the output frequency starts to ramp to 0 Hz. When the output frequency reaches the value set in start frequency of DC braking P1234, the drive injects a DC braking current P1232 for the time duration set in P1233.

Index:

P1234[0] : 1st. Drive data set (DDS)
P1234[1] : 2nd. Drive data set (DDS)
P1234[2] : 3rd. Drive data set (DDS)

Details:

See P1232 (DC braking current) and P1233 (duration of DC braking)

3.26 Compound braking

P1236[3]	**Compound braking current**			**Min:** 0	Level
	CStat: CUT	**Datatype:** U16	**Unit:** %	**Def:** 0	**2**
	P-Group: FUNC	**Active:** Immediately	**QuickComm.:** No	**Max:** 250	

Defines DC level superimposed on AC waveform after exeeding DC-link voltage threshold of compound braking. The value is entered in [%] relative to rated motor current (P0305).

If P1254 = 0 :

Compound braking switch-on level $U_{DC\_Comp} = 1.13 \cdot \sqrt{2} \cdot V_{mains} = 1.13 \cdot \sqrt{2} \cdot P0210$

otherwise :

Compound braking switch-on level $U_{DC\_Comp} = 0.98 \cdot r1242$

The Compound Brake is an overlay of the DC brake function with regenerative braking (effective braking at the ramp) after OFF1 or OFF3. This enables braking with controlled motor frequency and a minimum of energy returned to the motor. Through optimization of the ramp-down time and the compound braking an efficient braking without additional HW components is possible.

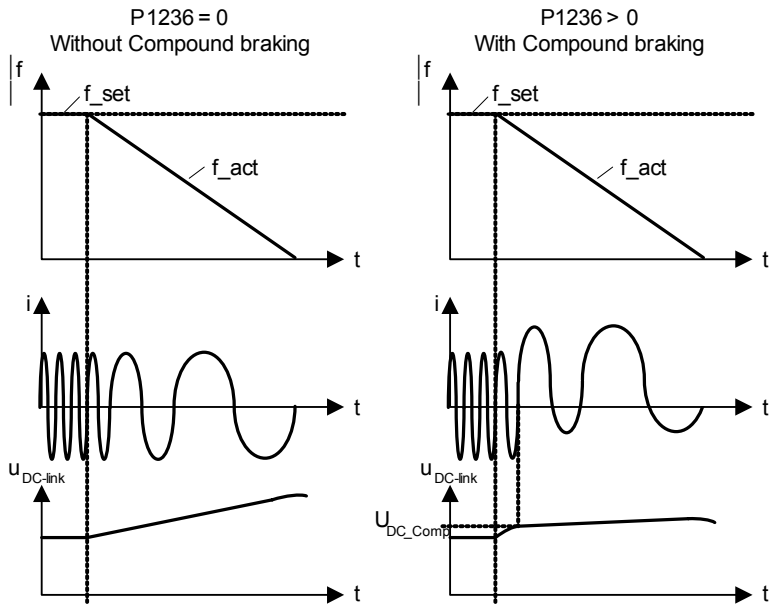

Index:

P1236[0] : 1st. Drive data set (DDS)
P1236[1] : 2nd. Drive data set (DDS)
P1236[2] : 3rd. Drive data set (DDS)

Value:

P1236 = 0 :
Compound braking disabled.

P1236 = 1 - 250 :
Level of DC braking current defined as a [%] of rated motor current (P0305).

Dependency:

Compound braking depends on the DC link voltage only (see threshold above). It will be active with OFF1/OFF3 and at regenerating conditions.

It is disabled, when:
- DC braking is active
- Flying start is active
- Vector mode (SLVC, VC) is selected

Notice:

Increasing the value will generally improve braking performance; however, if you set the value too high, an overcurrent trip may result. If used with dynamic braking enabled as well compound braking will take priority. If used with the Vdc max controller enabled the drive behaviour whilst braking may be worsened paticularly with high values of compound braking.

Compound braking does not function when the drive is in vector control.

3.27 Dynamic braking

P1237	Dynamic braking				Min: 0	Level
	CStat: CUT	Datatype: U16	Unit: -		Def: 0	2
	P-Group: FUNC	Active: Immediately	QuickComm.: No		Max: 5	

Dynamic braking absorbs the braking energy. This parameter activates the function "Dynamic braking" and defines the rated duty cycle of the braking resistor (chopper resistor). Dynamic braking is active when the function is enabled and DC-link voltage exeeds the dynamic braking switch-on level, see below.

If a motor is quickly ramped down by the inverter or a big load is dropped by a lifting application, the motor works in regenerating mode and saves energy back to the inverter. In this case the DC-link voltage of the inverter raises. If that voltage gets too high (overvaltage , F0002), the inverter pulses are disabled and the motor coasts to standstill. With dynamic braking the regenerative energy is fed by the chopper to the external braking resistor and converted into heat. So it is possible to brake down the drive in a controlled way.

Dynamic braking switch-on level

If P1254 = 0 :

$$V_{DC,Chopper} = 1.13 \cdot \sqrt{2} \cdot V_{mains} = 1.13 \cdot \sqrt{2} \cdot P0210$$

otherwise :

$$V_{DC,Chopper} = 0.98 \cdot r1242$$

Possible Settings:

0 Disabled
1 5 % duty cycle
2 10 % duty cycle
3 20 % duty cycle
4 50 % duty cycle
5 100 % duty cycle

Dependency:

This function is not available for for MM440 PX (FSFX and FSGX).

If used with DC braking enabled as well compound braking will take priority.

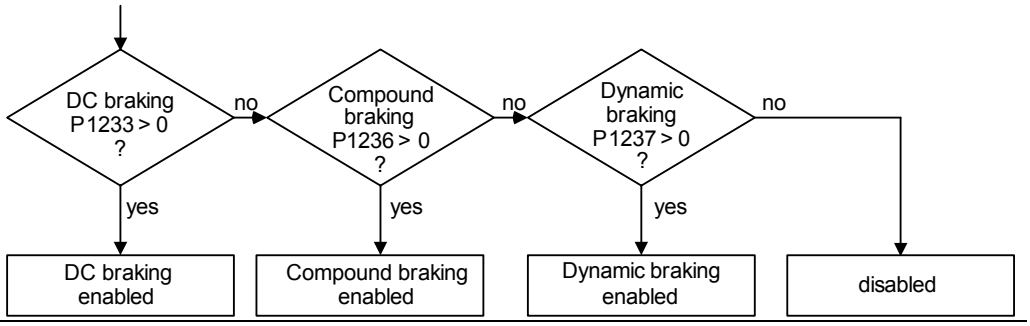

Notice:

Initially the brake will operate at a high duty cycle dependant on the DC link level until the thermal limit is approached. The duty cycle specified by this parameter will then be imposed. The resistor should be able to operate at this level indefinitely without overheating.

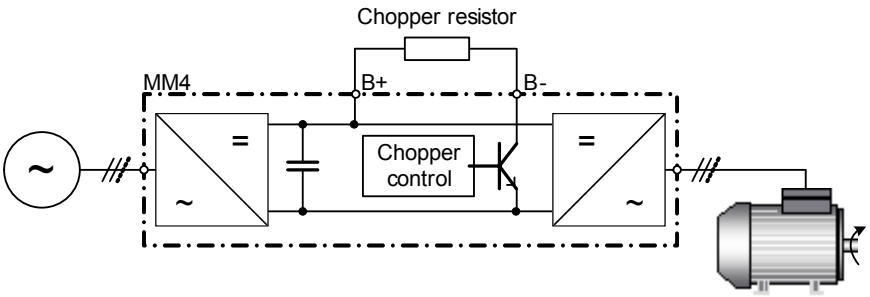

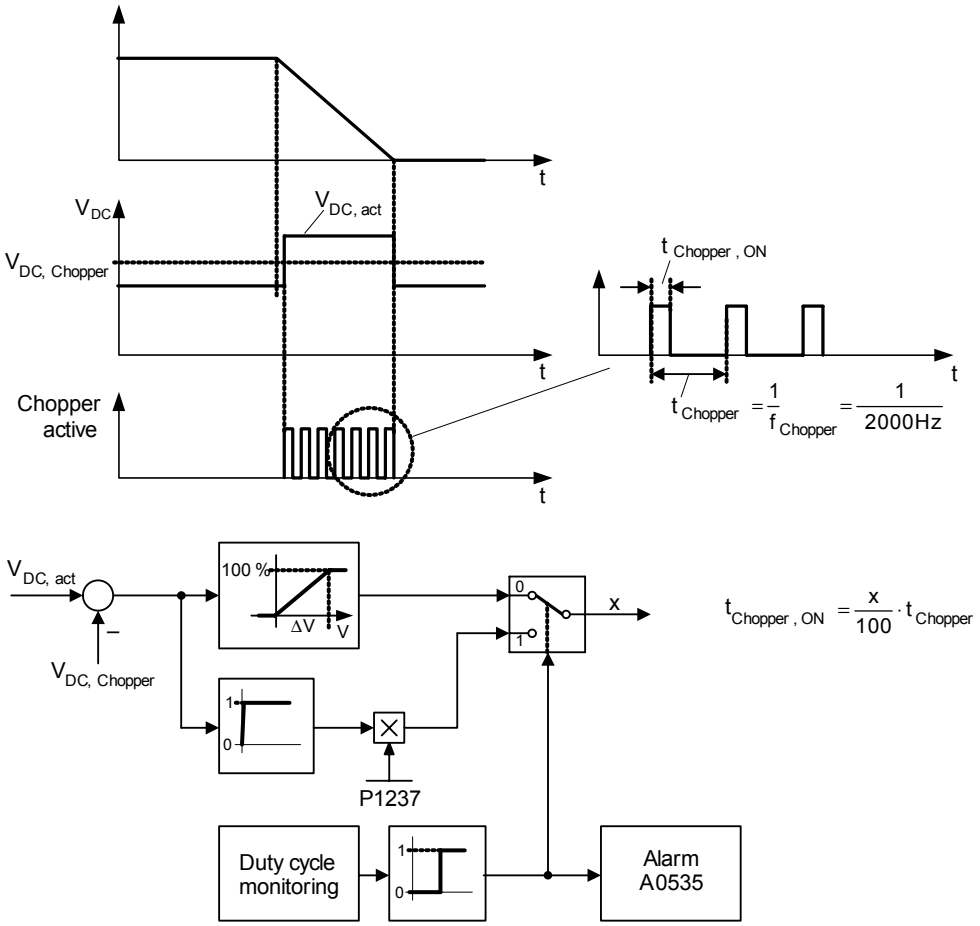

	Mains		
	200 - 240 V	380 - 480 V	500 - 600 V
Δ V	9.8 V	17.0 V	21.3 V

The threshold for the warning A0535 is equivalent to 10 seconds running at 95 % duty cycle. The duty cycle will be limited when it was running 12 seconds at 95 % duty cycle.

3.28 Vdc controller

P1240[3]	**Configuration of Vdc controller**			**Min:** 0	Level
	CStat: CT	**Datatype:** U16	**Unit:** -	**Def:** 1	**3**
	P-Group: FUNC	**Active:** Immediately	**QuickComm.:** No	**Max:** 3	

Enables / disables Vdc controller.

The Vdc controller dynamically controls the DC link voltage to prevent overvoltage trips on high inertia systems.

Possible Settings:

0 Vdc controller disabled
1 Vdc-max controller enabled
2 Kinetic buffering (Vdc-min controller) enabled
3 Vdc-max controller and kinetic buffering (KIB) enabled

Index:

P1240[0] : 1st. Drive data set (DDS)
P1240[1] : 2nd. Drive data set (DDS)
P1240[2] : 3rd. Drive data set (DDS)

Caution:
If P1245 increased too much, it may interfere with the drive normal operation.

Note:
Vdc max controller automatically increases ramp-down times to keep the DC-link voltage (r0026) within limits (r1242).

Vdc min is activated if DC-link voltage falls below the switch on level,P1245. The kinetic energy of the motor is then used to buffer the DC-link voltage, thus causing deceleration of the drive. If the drive trips F0003 immediately, try increasing the dynamic factor first, P1247. If still tripping F0003 try then increasing the switch on level, P1245.

r1242	**CO: Switch-on level of Vdc-max**			**Min:** -	Level
		Datatype: Float	**Unit:** V	**Def:** -	**3**
	P-Group: FUNC			**Max:** -	

Displays switch-on level of Vdc max controller.

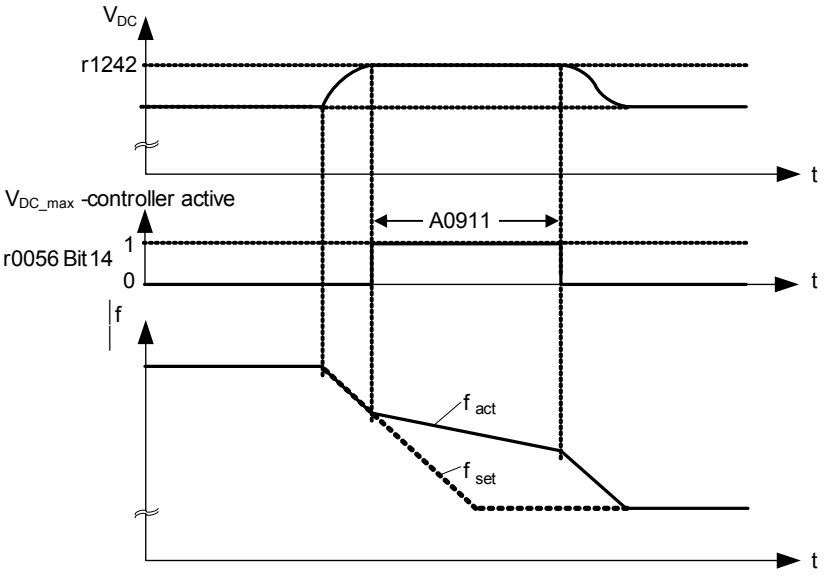

Following equation is only valid , if P1254 = 0 :

$$r1242 = 1.15 \cdot \sqrt{2} \cdot V_{mains} = 1.15 \cdot \sqrt{2} \cdot P0210$$

otherwise :

r1242 is internally calculated

Note:
Parameter r1242 (switch-in threshold) is determined by each power cycle, when precharging of the DC-link is finished.

P1243[3]	**Dynamic factor of Vdc-max**			**Min:** 10	Level
	CStat: CUT	**Datatype:** U16	**Unit:** %	**Def:** 100	**3**
	P-Group: FUNC	**Active:** Immediately	**QuickComm.:** No	**Max:** 200	

Defines dynamic factor for DC link controller in [%].

Index:
P1243[0] : 1st. Drive data set (DDS)
P1243[1] : 2nd. Drive data set (DDS)
P1243[2] : 3rd. Drive data set (DDS)

Dependency:
P1243 = 100 % means parameters P1250, P1251 and P1252 (gain, integration time and differential time) are used as set. Otherwise, these are multiplied by P1243 (dynamic factor of Vdc-max).

Note:
Vdc controller adjustment is calculated automatically from motor and inverter data.

P1245[3]	**Switch on level kin. buffering**			**Min:** 65	Level
	CStat: CUT	**Datatype:** U16	**Unit:** %	**Def:** 76	**3**
	P-Group: FUNC	**Active:** Immediately	**QuickComm.:** No	**Max:** 115	

Enter switch-on level for kinetic buffering (KIB) in [%] relative to supply voltage (P0210).

$$P1245[V] = \frac{P1245[\%]}{100} \cdot \sqrt{2} \cdot P0210$$

Index:

P1245[0] : 1st. Drive data set (DDS)
P1245[1] : 2nd. Drive data set (DDS)
P1245[2] : 3rd. Drive data set (DDS)

Warning:

Increasing the value too much, may interfere with the drive normal operation.

Note:

Changing P1254 does not affect the switch-on-level for KIB.

r1246[3]	**CO:Switch-on level kin buffering**			**Min:** -	Level
		Datatype: Float	**Unit:** V	**Def:** -	**3**
	P-Group: FUNC			**Max:** -	

Displays switch-on level of kinetic buffering (KIB, Vdc min controller).

Depending on the setting selected, the frequency limit defined in P1245 is used to either hold the speed or disable pulses. If not enough regeneration is produced, drive may trip undervoltage.

P1247[3]	**Dyn. factor of kinetic buffering**			**Min:** 10	Level
	CStat: CUT	**Datatype:** U16	**Unit:** %	**Def:** 100	**3**
	P-Group: FUNC	**Active:** Immediately	**QuickComm.:** No	**Max:** 200	

Enters dynamic factor for kinetic buffering (KIB, Vdc-min controller).

P1247 = 100 %
means parameters P1250, P1251 and P1252 (gain, integration time and differential time) are used as set. Otherwise, these are multiplied by P1247 (dynamic factor of Vdc-min).

Index:

P1247[0] : 1st. Drive data set (DDS)
P1247[1] : 2nd. Drive data set (DDS)
P1247[2] : 3rd. Drive data set (DDS)

Note:

Vdc controller adjustment is calculated automatically from motor and inverter data.

P1250[3]	**Gain of Vdc-controller**			**Min:** 0.00	Level
	CStat: CUT	**Datatype:** Float	**Unit:** -	**Def:** 1.00	**4**
	P-Group: FUNC	**Active:** Immediately	**QuickComm.:** No	**Max:** 10.00	

Enters gain for Vdc controller.

Index:

P1250[0] : 1st. Drive data set (DDS)
P1250[1] : 2nd. Drive data set (DDS)
P1250[2] : 3rd. Drive data set (DDS)

P1251[3]	**Integration time Vdc-controller**			**Min:** 0.1	Level
	CStat: CUT	**Datatype:** Float	**Unit:** ms	**Def:** 40.0	**4**
	P-Group: FUNC	**Active:** Immediately	**QuickComm.:** No	**Max:** 1000.0	

Enters integral time constant for Vdc controller.

Index:

P1251[0] : 1st. Drive data set (DDS)
P1251[1] : 2nd. Drive data set (DDS)
P1251[2] : 3rd. Drive data set (DDS)

P1252[3]	**Differential time Vdc-controller**			**Min:** 0.0	Level
	CStat: CUT	**Datatype:** Float	**Unit:** ms	**Def:** 1.0	**4**
	P-Group: FUNC	**Active:** Immediately	**QuickComm.:** No	**Max:** 1000.0	

Enters differential time constant for Vdc controller.

Index:

P1252[0] : 1st. Drive data set (DDS)
P1252[1] : 2nd. Drive data set (DDS)
P1252[2] : 3rd. Drive data set (DDS)

P1253[3]	Vdc-controller output limitation			Min: 0.00	Level
	CStat: CUT	Datatype: Float	Unit: Hz	Def: 10.00	3
	P-Group: FUNC	Active: Immediately	QuickComm.: No	Max: 600.00	

Limits maximum effect of Vdc max controller.

Index:

P1253[0] : 1st. Drive data set (DDS)
P1253[1] : 2nd. Drive data set (DDS)
P1253[2] : 3rd. Drive data set (DDS)

P1254	Auto detect Vdc switch-on levels			Min: 0	Level
	CStat: CT	Datatype: U16	Unit: -	Def: 1	3
	P-Group: FUNC	Active: Immediately	QuickComm.: No	Max: 1	

Enables/disables auto-detection of switch-on levels for Vdc control functionalities.

Following switch-on levels are calculated

- Switch-on level chopper
- Switch-on level compound brake
- Switch-on level Vdc_max controller r1242

P1254 does not have any effect on the
- Switch-on level kin. buffering r1246

Possible Settings:

0 Disabled
1 Enabled

Note:

The switch-on thresholds are only calculated during the start-up of the inverter after connection to the mains. An online-adaption is not performed during operation. This means that modification of P1254 does not immediately take effect and variations in the mains are also not initially taken into account.

P1254 = 0 (Automatic Detection disabled):
The above thresholds are calculated via P0210, if automatic detection is disabled.

P1256[3]	Reaction of kinetic buffering			Min: 0	Level
	CStat: CT	Datatype: U16	Unit: -	Def: 0	3
	P-Group: FUNC	Active: Immediately	QuickComm.: No	Max: 2	

Enters reaction for kinetic buffering controller (Vdc-min controller).

Depending on the setting selected, the frequency limit defined in P1257 is used to either hold the speed or disable pulses. If not enough regeneration is produced, drive may trip undervoltage.

Possible Settings:

0 Maintain DC-link until trip
1 Maintain DC-link until trip / stop
2 Control stop

Index:

P1256[0] : 1st. Drive data set (DDS)
P1256[1] : 2nd. Drive data set (DDS)
P1256[2] : 3rd. Drive data set (DDS)

Note:

P1256 = 0:
Maintain dclink voltage until mains is returned or drive is tripped undervoltage. The frequency is kept above the frequency limit provided in P1257.

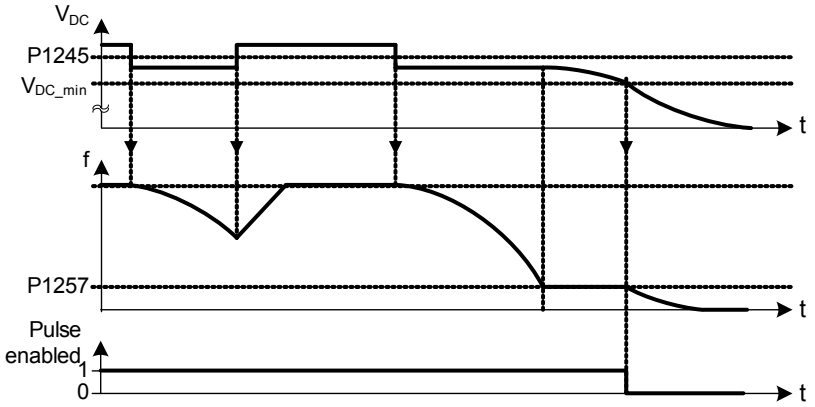

P1256 = 1:
Maintain dclink voltage until mains is returned or drive is tripped undervoltage or pulses disabled when frequency falls below the limit in P1257.

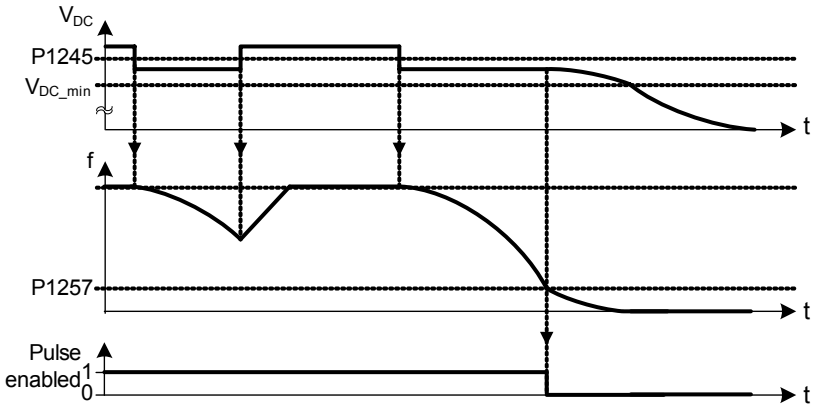

P1256 = 2:
This option ramps down the frequency to stand still even when mains return. If mains return, then an OFF1 is active until P1257 limit then pulses disabled. If mains does not return, frequency brought down under the control of vdc-min controller until P1257 limit then pulses disabled or undervoltage has occurred.

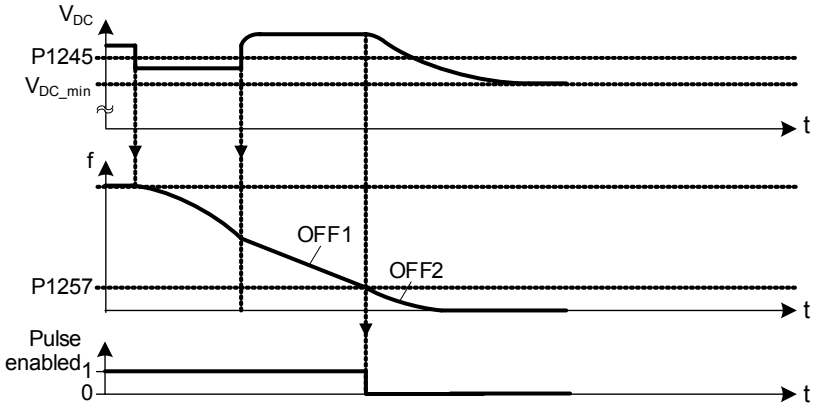

P1257[3]	**Freq limit for kinetic buffering**			**Min:** 0.00	Level
	CStat: CUT	**Datatype:** Float	**Unit:** Hz	**Def:** 2.50	**3**
	P-Group: SETPOINT	**Active:** first confirm	**QuickComm.:** No	**Max:** 600.00	

Frequency which kinetic buffering (KIB) either hold speed or disable pulses depending on P1256.

Index:

P1257[0] : 1st. Drive data set (DDS)
P1257[1] : 2nd. Drive data set (DDS)
P1257[2] : 3rd. Drive data set (DDS)

3.29 Control mode

P1300[3]	Control mode				Min: 0	Level
	CStat: CT	Datatype: U16	Unit: -		Def: 0	2
	P-Group: CONTROL	Active: first confirm	QuickComm.: Yes		Max: 23	

Controls relationship between speed of motor and voltage supplied by inverter as illustrated in the diagram below.

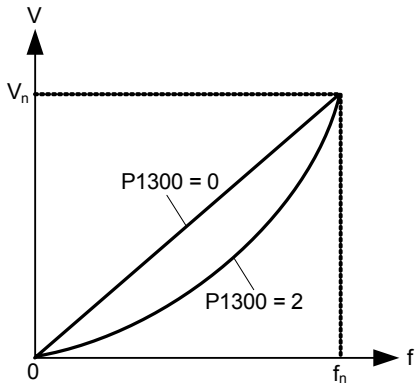

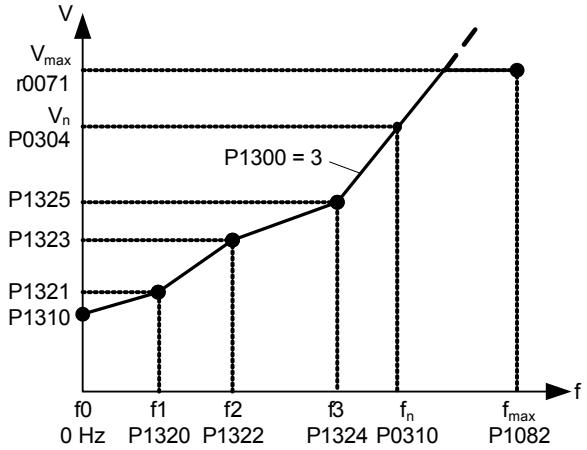

Possible Settings:

0 V/f with linear characteristic
1 V/f with FCC
2 V/f with parabolic characteristic
3 V/f with programmable characteristic
4 Reserved
5 V/f for textile applications
6 V/f with FCC for textile applications
19 V/f control with independent voltage setpoint
20 Sensorless vector control
21 Vector control with sensor
22 Sensorless vector torque-control
23 Vector torque-control with sensor

Index:

P1300[0] : 1st. Drive data set (DDS)
P1300[1] : 2nd. Drive data set (DDS)
P1300[2] : 3rd. Drive data set (DDS)

Dependency:

See parameter P0205, P0500

Caution:

When commissioning Vector Control with encoder-feedback (VC), the drive should be configured for V/f mode (see P1300) first. Run the drive and compare r0061 with r0021 that should agree in
- sign and
- magnitude (with a deviation of only a few percent).

Only if both criteria are fullfilled, change P1300 and select VC (P1300 = 21 or 23).

P0400 = 1 (single channel encoder) will only allow operation in one direction. If operation in both directions is required, connect an encoder with 2 channels (A and B) and select setting 2. See the Operating Instructions of the encoder module for more information.

Note:

P1300 = 1 : V/f with FCC (flux current control)
- Maintains motor flux current for improved efficiency.
- If FCC is chosen, linear V/f is active at low frequencies.

P1300 = 2 : V/f with a quadratic characteristic
- Suitable for centrifugal fans / pumps

P1300 = 3 : V/f with a programmable characteristic
- User defined characteristic (see P1320)
- For synchronous motors (e.g. SIEMOSYN motors)

P1300 = 5,6 : V/f for textil applications
- Slip compensation disabled.
- Imax controller modifies the output voltage only.
- Imax controller does not influence the output frequency.

P1300 = 19 : V/f control with independent voltage setpoint

The following table presents an overview of control parameters (V/f) that can be modify in relationship to P1300 dependencies:

ParNo.	Parameter name	Level	V/f							SLVC		VC	
			P1300 =										
			0	1	2	3	5	6	19	20	22	21	23
P1300[3]	Control mode	2	x	x	x	x	x	x	x	x	x	x	x
P1310[3]	Continuous boost	2	x	x	x	x	x	x	x	–	–	–	–
P1311[3]	Acceleration boost	2	x	x	x	x	x	x	x	–	–	–	–
P1312[3]	Starting boost	2	x	x	x	x	x	x	x	–	–	–	–
P1316[3]	Boost end frequency	3	x	x	x	x	x	x	x	–	–	–	–
P1320[3]	Programmable V/f freq. coord. 1	3	–	–	–	x	–	–	–	–	–	–	–
P1321[3]	Programmable V/f volt. coord. 1	3	–	–	–	x	–	–	–	–	–	–	–
P1322[3]	Programmable V/f freq. coord. 2	3	–	–	–	x	–	–	–	–	–	–	–
P1323[3]	Programmable V/f volt. coord. 2	3	–	–	–	x	–	–	–	–	–	–	–
P1324[3]	Programmable V/f freq. coord. 3	3	–	–	–	x	–	–	–	–	–	–	–
P1325[3]	Programmable V/f volt. coord. 3	3	–	–	–	x	–	–	–	–	–	–	–
P1330[3]	CI: Voltage setpoint	3	–	–	–	–	–	–	x	–	–	–	–
P1333[3]	Start frequency for FCC	3	–	x	–	–	–	x	–	–	–	–	–
P1335[3]	Slip compensation	2	x	x	x	x	–	–	–	–	–	–	–
P1336[3]	CO: U/f Slip limit	2	x	x	x	x	–	–	–	–	–	–	–
P1338[3]	Resonance damping gain V/f	3	x	x	x	x	–	–	–	–	–	–	–
P1340[3]	Imax freq. controller prop. gain	3	x	x	x	x	x	x	x	–	–	–	–
P1341[3]	Imax controller integral time	3	x	x	x	x	x	x	x	–	–	–	–
P1345[3]	Imax controller prop. gain	3	x	x	x	x	x	x	x	–	–	–	–
P1346[3]	Imax voltage ctrl. integral time	3	x	x	x	x	x	x	x	–	–	–	–
P1350[3]	Voltage soft start	3	x	x	x	x	x	x	x	–	–	–	–

SLVC / VC can provide excellent performance for the following types of application:
- Applications which require high torque performance
- Applications which require fast respond to shock loading
- Applications which require torque holding while passing through 0 Hz
- Applications which require very accurate speed holding
- Applications which require motor pull out protection

SLVC/VC-Restrictions:
- SLVC / VC is dependent on the accuracy of the motor model being used and the measurements being performed by the inverter. There are therefore certain restrictions on the use of SLVC / VC:

- f_{max} = min(200 Hz, 5 • P0310) (max. frequency)
- $\frac{1}{4} \leq \frac{P0305}{r0207} \leq \frac{r0209}{r0207}$ (ratio of rated motor current to rated inverter current)
- no synchronuos motor

Recommended means of SLVC/VC-commissioning:
- For correct operation under SLVC / VC control it is imperative that the name plate data of the motor (P0304 - P0310) is correctly entered and that the motor data identification (P1910) must be carried out on a cold motor. It is also necessary to ensure that the motor ambient temperature is correctly entered in P0625 if this is significantly different from the default value of 20°C. This must be done after the quick commissioning has been completed (P3900) but before the motor data identification measurements are carried out.
- See parameter P0400 and documentation of encoder and encoder module when commissioning VC (P1300 = 21 or 23).

SLVC/VC-Optimisation:
The following parameters can be adjusted by the user to improve performance.
- P0003 = 3
- P0342: Total / motor inertia ratio

Sensorless Vector Control (SLVC):
- P1470: P gain (SLVC)
- P1472: I term (SLVC)
- P1610: Continuous torque boost (SLVC, open loop boost)
- P1611: Acceleration torque boost (SLVC, open loop boost)
- P1750: Control word of motor model
- P1755: Start-frequency motor model (SLVC)

Vector Control (VC):
- P1460: P gain
- P1462: I term

The following table presents an overview of control parameters (SLVC, VC) that can be modify in relationship to P1300 dependencies:

ParNo.	Parameter name	Level	V/f							SLVC		VC	
			P1300 =										
			0	1	2	3	5	6	19	20	22	21	23
P1400[3]	Configuration of speed control	3	–	–	–	–	–	–	–	–	–	x	–
P1442[3]	Filter time for act. speed	3	–	–	–	–	–	–	–	–	–	x	–
P1452[3]	Filter time for act.speed (SLVC)	3	–	–	–	–	–	–	–	x	–	–	–
P1460[3]	Gain speed controller	2	–	–	–	–	–	–	–	–	–	x	–
P1462[3]	Integral time speed controller	2	–	–	–	–	–	–	–	–	–	x	–
P1470[3]	Gain speed controller (SLVC)	2	–	–	–	–	–	–	–	x	–	–	–
P1472[3]	Integral time n-ctrl. (SLVC)	2	–	–	–	–	–	–	–	x	–	–	–
P1477[3]	BI: Set integrator of n-ctrl.	3	–	–	–	–	–	–	–	x	–	x	–
P1478[3]	CI: Set integrator value n-ctrl.	3	–	–	–	–	–	–	–	x	–	x	–
P1488[3]	Droop input source	3	–	–	–	–	–	–	–	x	–	x	–
P1489[3]	Droop scaling	3	–	–	–	–	–	–	–	x	–	x	–
P1492[3]	Enable droop	3	–	–	–	–	–	–	–	x	–	x	–
P1496[3]	Scaling accel. precontrol	3	–	–	–	–	–	–	–	x	–	x	–
P1499[3]	Scaling accel. torque control	3	–	–	–	–	–	–	–	–	x	–	–
P1500[3]	Selection of torque setpoint	2	–	–	–	–	–	–	–	x	x	x	x
P1501[3]	BI: Change to torque control	3	–	–	–	–	–	–	–	x	x	x	x
P1503[3]	CI: Torque setpoint	3	–	–	–	–	–	–	–	–	x	–	x
P1511[3]	CI: Additional torque setpoint	3	–	–	–	–	–	–	–	x	x	x	x
P1520[3]	CO: Upper torque limit	2	–	–	–	–	–	–	–	x	x	x	x
P1521[3]	CO: Lower torque limit	2	–	–	–	–	–	–	–	x	x	x	x
P1522[3]	CI: Upper torque limit	3	–	–	–	–	–	–	–	x	x	x	x
P1523[3]	CI: Lower torque limit	3	–	–	–	–	–	–	–	x	x	x	x
P1525[3]	Scaling lower torque limit	3	–	–	–	–	–	–	–	x	x	x	x
P1530[3]	Motoring power limitation	2	–	–	–	–	–	–	–	x	x	x	x
P1531[3]	Regenerative power limitation	2	–	–	–	–	–	–	–	x	x	x	x
P1570[3]	CO: Fixed value flux setpoint	2	–	–	–	–	–	–	–	x	x	x	x
P1574[3]	Dynamic voltage headroom	3	–	–	–	–	–	–	–	x	x	x	x
P1580[3]	Efficiency optimization	2	–	–	–	–	–	–	–	x	x	x	x
P1582[3]	Smooth time for flux setpoint	3	–	–	–	–	–	–	–	x	x	x	x
P1596[3]	Int. time field weak. controller	3	–	–	–	–	–	–	–	x	x	x	x
P1610[3]	Continuous torque boost (SLVC)	2	–	–	–	–	–	–	–	x	x	–	–
P1611[3]	Acc. torque boost (SLVC)	2	–	–	–	–	–	–	–	x	x	–	–
P1740	Gain for oscillation damping	3	–	–	–	–	–	–	–	x	x	–	–
P1750[3]	Control word of motor model	3	–	–	–	–	–	–	–	x	x	x	x
P1755[3]	Start-freq. motor model (SLVC)	3	–	–	–	–	–	–	–	x	x	–	–
P1756[3]	Hyst.-freq. motor model (SLVC)	3	–	–	–	–	–	–	–	x	x	–	–
P1758[3]	T(wait) transit to feed-fwd-mode	3	–	–	–	–	–	–	–	x	x	–	–
P1759[3]	T(wait) for n-adaption to settle	3	–	–	–	–	–	–	–	x	x	–	–
P1764[3]	Kp of n-adaption (SLVC)	3	–	–	–	–	–	–	–	x	x	–	–
P1780[3]	Control word of Rs/Rr-adaption	3	–	–	–	–	–	–	–	x	x	–	–
P0400[3]	Select encoder type	2	–	–	–	–	–	–	–	–	–	x	x
P0408[3]	Encoder pulses per revolution	2	–	–	–	–	–	–	–	–	–	x	x
P0491[3]	Reaction on speed signal loss	2	–	–	–	–	–	–	–	–	–	x	x
P0492[3]	Allowed speed difference	2	–	–	–	–	–	–	–	–	–	x	x
P0494[3]	Delay speed loss reaction	2	–	–	–	–	–	–	–	–	–	x	x

1) If the speed control (main setpoint) is selected a torque setpoint is available via the additional setpoint channel.

3.29.1 V/f control technique

P1310[3]	**Continuous boost**				**Min:** 0.0	Level
	CStat: CUT	**Datatype:** Float	**Unit:** %		**Def:** 50.0	**2**
	P-Group: CONTROL	**Active:** Immediately	**QuickComm.:** No		**Max:** 250.0	

P1310 causes a voltage boost depending on the output frequency (see diagran). At low output frequencies the output voltage is low to keep the flux level constant. However, the output voltage may be too low
- for magnetisation the asynchronous motor
- to hold the load
- to overcome losses in the system.

To compensate these effects, the output voltage can be increased using parameter P1310.

Defines boost level in [%] relative to P0305 (rated motor current) applicable to both linear and quadratic V/f curves according to the diagram below:

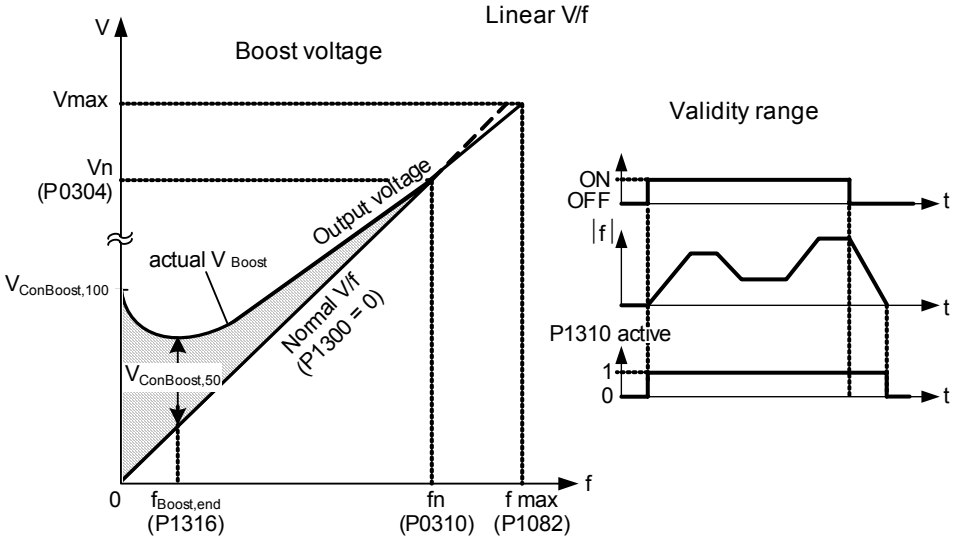

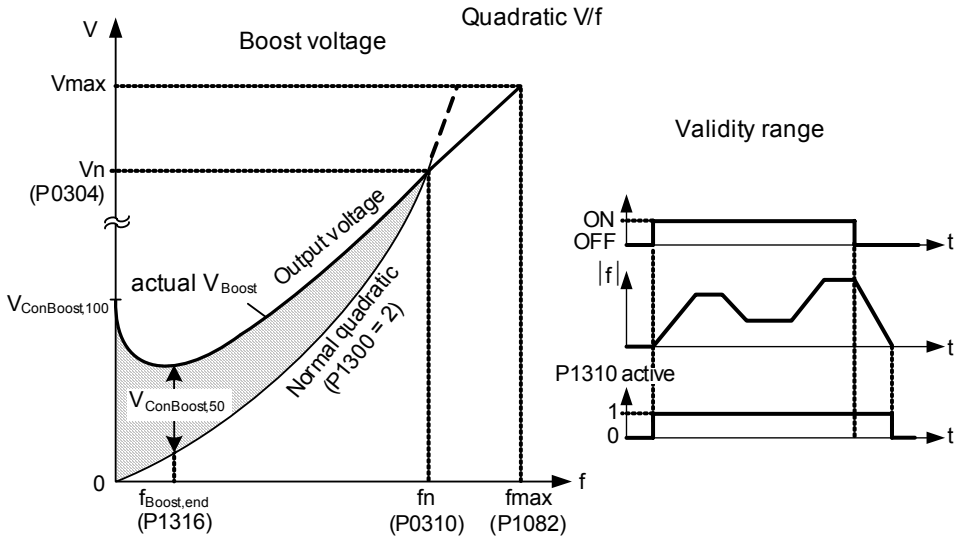

where voltage values are given

$$V_{ConBoost100} = P0305 \cdot P0350 \cdot \frac{P1310}{100}$$

$$V_{ConBoost,50} = \frac{V_{ConBoost,100}}{2}$$

Index:

P1310[0] : 1st. Drive data set (DDS)
P1310[1] : 2nd. Drive data set (DDS)
P1310[2] : 3rd. Drive data set (DDS)

Dependency:

Continous boost P1310 has no effect during vector operation because the inverter calculates continously the optimum operating conditions.

Note:

- Increasing the boost levels increases motor heating (especially at standstill).
- The boost values are combined when continuous boost (P1310) used in conjunction with other boost parameters (acceleration boost P1311 and starting boost P1312).
- However priorities are allocated to these parameters as follows:
  P1310 > P1311 > P1312
- The total boost is limited by following equation:

$$\sum V_{Boost} \leq 3 \cdot R_s \cdot I_{Mot} = 3 \cdot P0305 \cdot P0350$$

- Setting in P0640 (motor overload factor [%]) limits the boost:

$$\frac{\sum V_{Boost}}{P0305 \cdot P0350} \leq \frac{P0640}{100}$$

P1311[3]	**Acceleration boost**				**Min:** 0.0	Level
	CStat: CUT	**Datatype:** Float	**Unit:** %		**Def:** 0.0	**2**
	P-Group: CONTROL	**Active:** Immediately	**QuickComm.:** No		**Max:** 250.0	

P1311 will only produce boost during ramping, and is therefore useful for additional torque during acceleration and deceleration. Contrary to P1312, that is only active when an ON command is given, p1311 is active after each acceleration resp. deceleration. The boost is active, if P1311 > 0 resp. if the conditiones given below are fulfilled.

Applies boost in [%] relative to P0305 (rated motor current) following a positive setpoint change and drops back out once the setpoint is reached. It is activated when the setpoint changes and deactivated when the setpoint is reached.

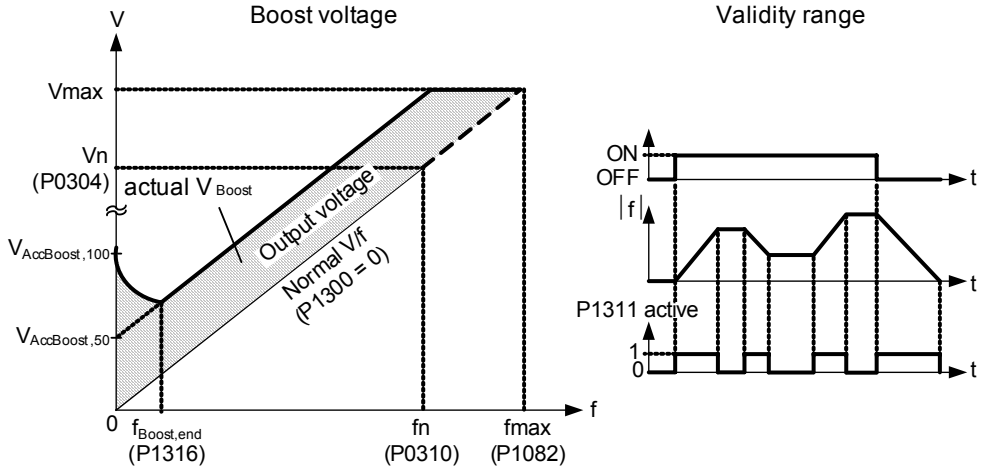

where voltage values are given

$$V_{AccBoost,100} = P0305 \cdot P0350 \cdot \frac{P1311}{100}$$

$$V_{AccBoost,50} = \frac{V_{AccBoost,100}}{2}$$

Index:

P1311[0] : 1st. Drive data set (DDS)
P1311[1] : 2nd. Drive data set (DDS)
P1311[2] : 3rd. Drive data set (DDS)

Dependency:

Acceleration boost P1311 has no effect during vector operation.

Note:

See parameter P1310

P1312[3]	**Starting boost**			**Min:** 0.0	Level
	CStat: CUT	**Datatype:** Float	**Unit:** %	**Def:** 0.0	**2**
	P-Group: CONTROL	**Active:** Immediately	**QuickComm.:** No	**Max:** 250.0	

Applies a constant linear offset (in [%] relative to P0305 (rated motor current)) to active V/f curve (either linear or quadratic) after an ON command and is active until
1) ramp output reaches setpoint for the first time respectively
2) setpoint is reduced to less than present ramp output

This is useful for starting loads with high inertia.

Setting the starting boost (P1312) too high will cause the inverter to limit the current, which will in turn restrict the output frequency to below the setpoint frequency.

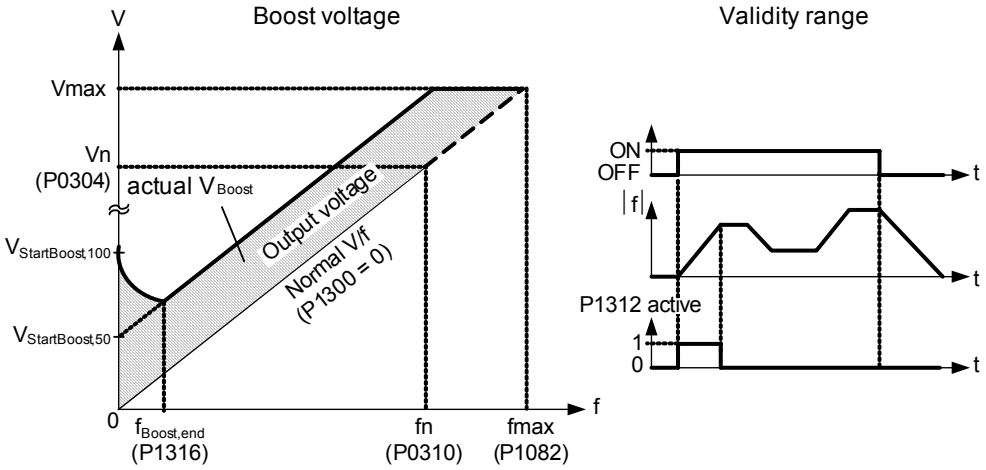

where voltage values are given

$$V_{StartBoost100} = P0305 \cdot P0350 \cdot \frac{P1312}{100}$$

$$V_{StartBoost50} = \frac{V_{StartBoost100}}{2}$$

Index:

P1312[0] : 1st. Drive data set (DDS)
P1312[1] : 2nd. Drive data set (DDS)
P1312[2] : 3rd. Drive data set (DDS)

Example:

Setpoint = 50Hz. Ramping up with starting boost. During ramp up, setpoint changed to 20Hz. As soon as setpoint changed, starting boost removed because setpoint smaller than present ramp output.

Dependency:

Acceleration boost P1312 has no effect during vector operation.

Note:

See parameter P1310

r1315	**CO: Total boost voltage**			**Min:** -	Level
		Datatype: Float	**Unit:** V	**Def:** -	**4**
	P-Group: CONTROL			**Max:** -	

Displays total value of voltage boost (in volts).

P1316[3]	**Boost end frequency**			**Min:** 0.0	Level
	CStat: CUT	**Datatype:** Float	**Unit:** %	**Def:** 20.0	**3**
	P-Group: CONTROL	**Active:** Immediately	**QuickComm.:** No	**Max:** 100.0	

Defines point at which programmed boost reaches 50 % of its value. This value is expressed in [%] relative to P0310 (rated motor frequency).

The default frequency is defined as follows:

$$f_{Boostmin} = 2 \cdot \left(\frac{153}{\sqrt{P_{motor}}} + 3\right)$$

Index:

P1316[0] : 1st. Drive data set (DDS)
P1316[1] : 2nd. Drive data set (DDS)
P1316[2] : 3rd. Drive data set (DDS)

Note:

- The expert user may change this value to alter the shape of the curve, e.g. to increase torque at a particular frequency.
- Default value is depending on inverter type and its rating data.

Details:

See diagram in P1310 (continuous boost).

P1320[3]	**Programmable V/f freq. coord. 1**			**Min:** 0.00	Level
	CStat: CT	**Datatype:** Float	**Unit:** Hz	**Def:** 0.00	**3**
	P-Group: CONTROL	**Active:** Immediately	**QuickComm.:** No	**Max:** 650.00	

Sets V/f coordinates (P1320/1321 to P1324/1325) to define V/f characteristic.

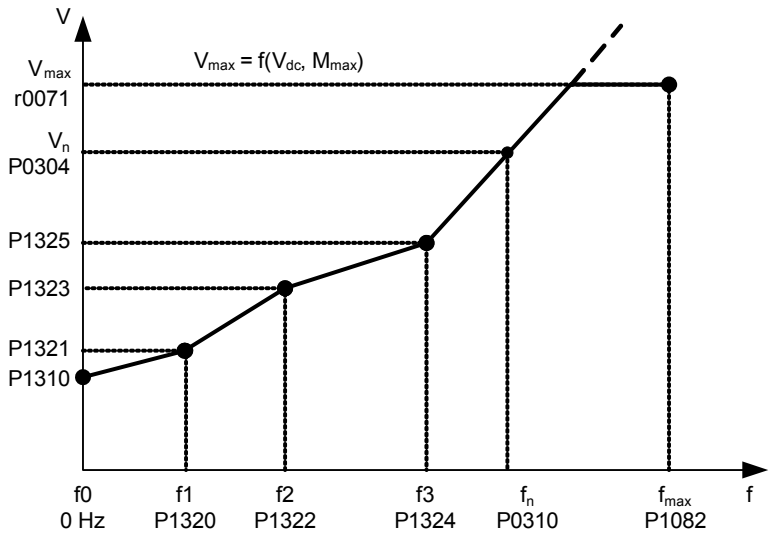

$$P1310[V] = \frac{P1310[\%]}{100[\%]} \cdot \frac{r0395[\%]}{100[\%]} \cdot P0304[V]$$

Index:

P1320[0] : 1st. Drive data set (DDS)
P1320[1] : 2nd. Drive data set (DDS)
P1320[2] : 3rd. Drive data set (DDS)

Example:

This parameter can be used to provide correct torque at correct frequency and is useful when used with synchronous motors.

Dependency:

To set parameter, select P1300 = 3 (V/f with programmable characteristic).

Note:

Linear interpolation will be applied between the individual data points.

V/f with programmable characteristic (P1300 = 3) has 3 programmable points. The two non-programmable points are:

- Continuous boost P1310 at zero 0 Hz
- Rated motor voltage P0304 at rated motor frequency P0310

The acceleration boost and starting boost defined in P1311 and P1312 are applied to V/f with programmable characteristic.

P1321[3]	Programmable V/f volt. coord. 1			Min: 0.0	Level
	CStat: CUT	Datatype: Float	Unit: V	Def: 0.0	3
	P-Group: CONTROL	Active: Immediately	QuickComm.: No	Max: 3000.0	

See P1320 (programmable V/f freq. coord. 1).

Index:

P1321[0] : 1st. Drive data set (DDS)
P1321[1] : 2nd. Drive data set (DDS)
P1321[2] : 3rd. Drive data set (DDS)

P1322[3]	Programmable V/f freq. coord. 2			Min: 0.00	Level
	CStat: CT	Datatype: Float	Unit: Hz	Def: 0.00	3
	P-Group: CONTROL	Active: Immediately	QuickComm.: No	Max: 650.00	

See P1320 (programmable V/f freq. coord. 1).

Index:

P1322[0] : 1st. Drive data set (DDS)
P1322[1] : 2nd. Drive data set (DDS)
P1322[2] : 3rd. Drive data set (DDS)

P1323[3]	Programmable V/f volt. coord. 2			Min: 0.0	Level
	CStat: CUT	Datatype: Float	Unit: V	Def: 0.0	3
	P-Group: CONTROL	Active: Immediately	QuickComm.: No	Max: 3000.0	

See P1320 (programmable V/f freq. coord. 1).

Index:

P1323[0] : 1st. Drive data set (DDS)
P1323[1] : 2nd. Drive data set (DDS)
P1323[2] : 3rd. Drive data set (DDS)

P1324[3]	Programmable V/f freq. coord. 3			Min: 0.00	Level
	CStat: CT	Datatype: Float	Unit: Hz	Def: 0.00	3
	P-Group: CONTROL	Active: Immediately	QuickComm.: No	Max: 650.00	

See P1320 (programmable V/f freq. coord. 1).

Index:

P1324[0] : 1st. Drive data set (DDS)
P1324[1] : 2nd. Drive data set (DDS)
P1324[2] : 3rd. Drive data set (DDS)

P1325[3]	Programmable V/f volt. coord. 3			Min: 0.0	Level
	CStat: CUT	Datatype: Float	Unit: V	Def: 0.0	3
	P-Group: CONTROL	Active: Immediately	QuickComm.: No	Max: 3000.0	

See P1320 (programmable V/f freq. coord. 1).

Index:

P1325[0] : 1st. Drive data set (DDS)
P1325[1] : 2nd. Drive data set (DDS)
P1325[2] : 3rd. Drive data set (DDS)

P1330[3]	CI: Voltage setpoint			Min: 0:0	Level
	CStat: T	Datatype: U32	Unit: -	Def: 0:0	3
	P-Group: CONTROL	Active: first confirm	QuickComm.: No	Max: 4000:0	

BICO parameter for selecting source of voltage setpoint for independent V/f control.

Index:

P1330[0] : 1st. Command data set (CDS)
P1330[1] : 2nd. Command data set (CDS)
P1330[2] : 3rd. Command data set (CDS)

P1333[3]	**Start frequency for FCC**			**Min:** 0.0	Level
	CStat: CUT	**Datatype:** Float	**Unit:** %	**Def:** 10.0	**3**
	P-Group: CONTROL	**Active:** Immediately	**QuickComm.:** No	**Max:** 100.0	

Defines the FCC starting frequency as a percentage of the rated motor frequency (P0310).

When FCC is activated using P1300 = 1, then as a function of the FCC starting frequency plus hysteresis and the actual frequency, a changeover is made with a continuous transition between the linear V/f characteristic (P1300 = 0) and FCC (refer to the diagram).

$$f_{FCC} = \frac{P0310}{100} \cdot P1333$$

$$f_{FCC+Hys} = \frac{P0310}{100} \cdot (P1333 + 6\%)$$

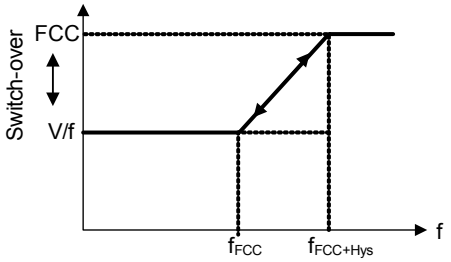

Index:

P1333[0] : 1st. Drive data set (DDS)
P1333[1] : 2nd. Drive data set (DDS)
P1333[2] : 3rd. Drive data set (DDS)

Notice:

- A value that is excessively low can result in instability.
- The constant voltage boost P1310 is continuously de-activated - essentially the same as when switching-in FCC.
- Contrary, the voltage boosts P1311 and P1312 remain active over the complete frequency range.

3.29.1.1 Slip compensation

P1335[3]	Slip compensation				Min: 0.0	Level
	CStat: CUT	Datatype: Float	Unit: %		Def: 0.0	2
	P-Group: CONTROL	Active: Immediately	QuickComm.: No		Max: 600.0	

Dynamically adjusts output frequency of inverter so that motor speed is kept constant independent of motor load.

In the V/f-control, the motor speed will always be less than the command speed due to the slip speed. For a given speed command, the speed will drop as load is increased. The speed regulation of drive can be improved by the technique known as slip compensation.

Increasing the load from M1 to M2 (see diagram) will decrease the motor speed from f1 to f2, due to the slip. The inverter can compensate for this by increasing the output frequency slightly as the load increases. The inverter measures the current and increases the output frequency to compensate for the expected slip.

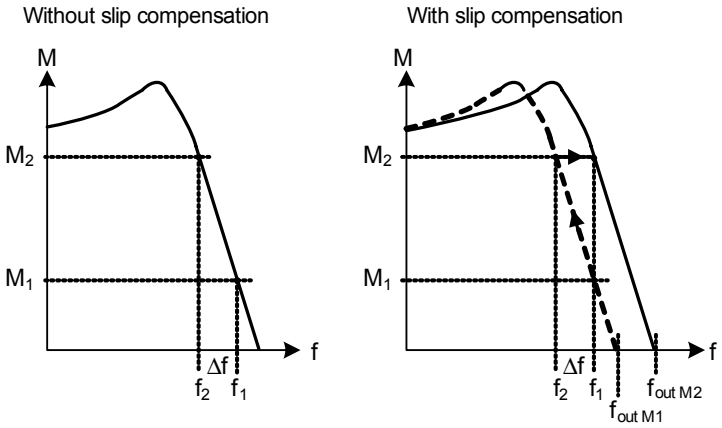

Index:

P1335[0] : 1st. Drive data set (DDS)
P1335[1] : 2nd. Drive data set (DDS)
P1335[2] : 3rd. Drive data set (DDS)

Value:

P1335 = 0 % :
Slip compensation disabled.

P1335 = 50 % - 70 % :
Full slip compensation at cold motor (partial load).

P1335 = 100 % :
Full slip compensation at warm motor (full load).

Range of slip compensation :

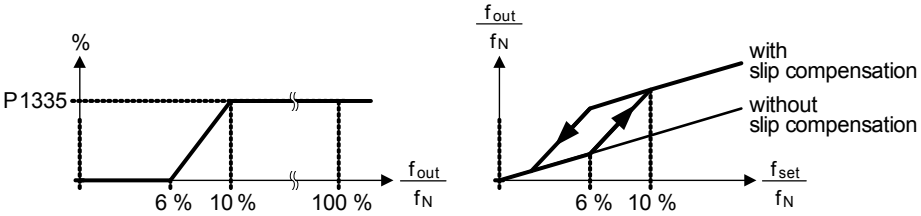

Notice:

The applied value of the slip compensation (scaled by P1335) is limited by following equation:

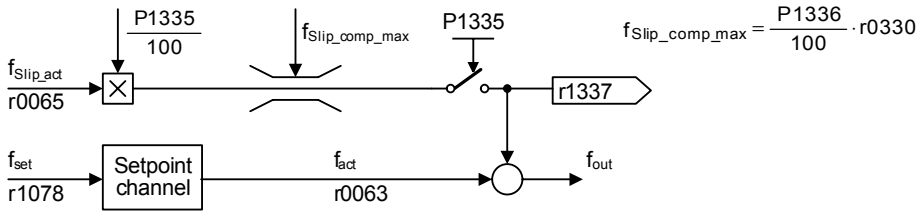

P1336[3]	Slip limit				Min: 0	Level
	CStat: CUT	Datatype: U16	Unit: %		Def: 250	2
	P-Group: CONTROL	Active: Immediately	QuickComm.: No		Max: 600	

Compensation slip limit in [%] relative to r0330 (rated motor slip), which is added to frequency setpoint.

Index:

P1336[0] : 1st. Drive data set (DDS)
P1336[1] : 2nd. Drive data set (DDS)
P1336[2] : 3rd. Drive data set (DDS)

Dependency:

Slip compensation (P1335) active.

r1337	CO: V/f slip frequency			Min: -	Level
		Datatype: Float	Unit: %	Def: -	3
	P-Group: CONTROL			Max: -	

Displays actual compensated motor slip as [%]

Dependency:

Slip compensation (P1335) active.

3.29.1.2 Resonance damping

P1338[3]	Resonance damping gain V/f			Min: 0.00	Level
	CStat: CUT	Datatype: Float	Unit: -	Def: 0.00	3
	P-Group: CONTROL	Active: Immediately	QuickComm.: No	Max: 10.00	

Defines resonance damping gain for V/f. Here, di/dt of the acitve current will be scaled by P1338 (see diagram below). If di/dt increases the resonance damping circuit decreases the inverter output frequency.

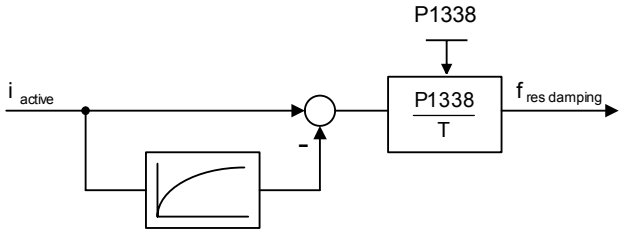

Index:

P1338[0] : 1st. Drive data set (DDS)
P1338[1] : 2nd. Drive data set (DDS)
P1338[2] : 3rd. Drive data set (DDS)

Note:

- The resonance damping function is used to dampen oscillations in the active current. These especially occur when rotating field motors are operating under no-load conditions. The parameter is not used to optimize the stabilizing behavior.
- In the V/f control modes (refer to P1300), the resonance damping controller is activate in a range from approximately 5 % up to 70 % of the rated motor frequency (P0310).
- An excessively high value results in instability (positive feedback).

3.29.1.3 Imax controller

P1340[3]	Imax freq. controller prop. gain			Min: 0.000	Level 3
CStat: CUT	Datatype: Float	Unit: -	Def: 0.000		
P-Group: CONTROL	Active: Immediately	QuickComm.: No	Max: 0.499		

Proportional gain of the I_max frequency controller.

The Imax controller reduces inverter current if the output current exceeds the maximum motor current (r0067).

In linear V/f, parabolic V/f, FCC, and programmable V/f modes the I_max controller uses both a frequency controller (see parameters P1340 and P1341) and a voltage controller (see parameters P1345 and P1346). The frequency controller seeks to reduce current by limiting the inverter output frequency (to a minimum of the two times nominal slip frequency). If this action does not successfully remove the overcurrent condition, the inverter output voltage is reduced using the I_max voltage controller. When the overcurrent condition has been removed successfully, frequency limiting is removed using the ramp-up time set in P1120.

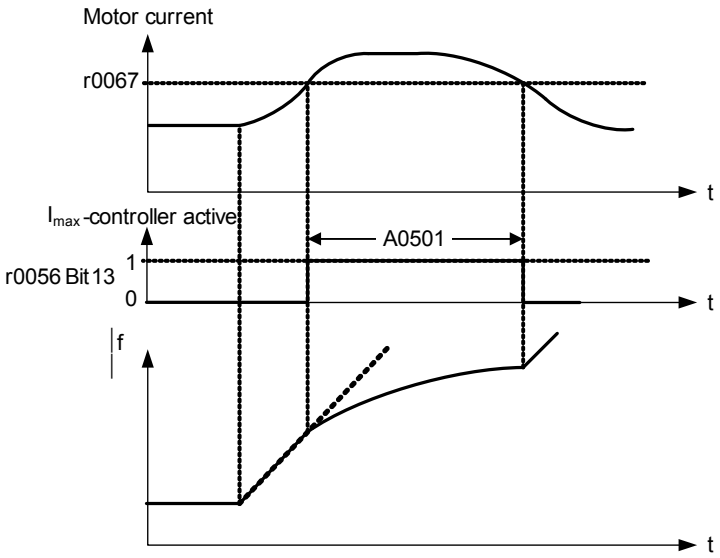

In linear V/f for textiles, FCC for textiles, or external V/f modes only the I_max voltage controller is used to reduce current (See parameters P1345 and P1346).

Index:

P1340[0] : 1st. Drive data set (DDS)
P1340[1] : 2nd. Drive data set (DDS)
P1340[2] : 3rd. Drive data set (DDS)

Note:

The I_max controller can be disabled by setting the frequency controller integral time P1341 to zero. This disables both the frequency and voltage controllers. Note that when disabled, the I_max controller will take no action to reduce current but overcurrent warnings will still be generated, and the Drive will trip in excessive overcurrent or overload conditions.

P1341[3]	Imax freq. ctrl. integral time			Min: 0.000	Level 3
CStat: CUT	Datatype: Float	Unit: s	Def: 0.300		
P-Group: CONTROL	Active: Immediately	QuickComm.: No	Max: 50.000		

Integral time constant of the I_max controller.

P1341 = 0 :
I_max frequency and voltage controllers disabled

P1340 = 0 and P1341 > 0 :
frequency controller enhanced integral

P1340 > 0 and P1341 > 0 :
frequency controller normal PI control

See description in parameter P1340 for further information.

Index:

P1341[0] : 1st. Drive data set (DDS)
P1341[1] : 2nd. Drive data set (DDS)
P1341[2] : 3rd. Drive data set (DDS)

r1343	**CO: Imax controller freq. output**			**Min:**	-	Level **3**
		Datatype: Float	**Unit:** Hz	**Def:**	-	
	P-Group: CONTROL			**Max:**	-	

Displays effective frequency limitation.

Dependency:

If I_max controller not in operation, parameter normally shows max. frequency P1082.

r1344	**CO: Imax controller volt. output**			**Min:**	-	Level **3**
		Datatype: Float	**Unit:** V	**Def:**	-	
	P-Group: CONTROL			**Max:**	-	

Displays amount by which the I_max controller is reducing the inverter output voltage.

P1345[3]	**Imax voltage ctrl. prop. gain**			**Min:**	0.000	Level **3**
	CStat: CUT	**Datatype:** Float	**Unit:** -	**Def:**	0.250	
	P-Group: CONTROL	**Active:** Immediately	**QuickComm.:** No	**Max:**	5.499	

Proportional gain of the I_max voltage controller. See parameter P1340 for further information.

Index:

P1345[0] : 1st. Drive data set (DDS)
P1345[1] : 2nd. Drive data set (DDS)
P1345[2] : 3rd. Drive data set (DDS)

P1346[3]	**Imax voltage ctrl. integral time**			**Min:**	0.000	Level **3**
	CStat: CUT	**Datatype:** Float	**Unit:** s	**Def:**	0.300	
	P-Group: CONTROL	**Active:** Immediately	**QuickComm.:** No	**Max:**	50.000	

Integral time constant of the I_max voltage controller.

P1341 = 0 :
I_max frequency and voltage controllers disabled.

P1345 = 0 and P1346 > 0 :
I_max voltage controller enhanced integral

P1345 > 0 and P1346 > 0 :
I_max voltage controller normal PI control

See description in parameter P1340 for further information.

Index:

P1346[0] : 1st. Drive data set (DDS)
P1346[1] : 2nd. Drive data set (DDS)
P1346[2] : 3rd. Drive data set (DDS)

3.29.1.4 Soft starting

P1350[3]	**Voltage soft start**				**Min:** 0	Level
	CStat: CUT	**Datatype:** U16	**Unit:** -		**Def:** 0	**3**
	P-Group: CONTROL	**Active:** first confirm	**QuickComm.:** No		**Max:** 1	

Selecting the soft starting function.

With soft starting, the flux in the motor is established with some delay. This ensures that the motor only rotates in the required direction of rotation even with existing residual magnetism. When activated, at powered-on, the output voltage is ramped-up to the value of the characteristic voltage within the magnetizing time P0346.

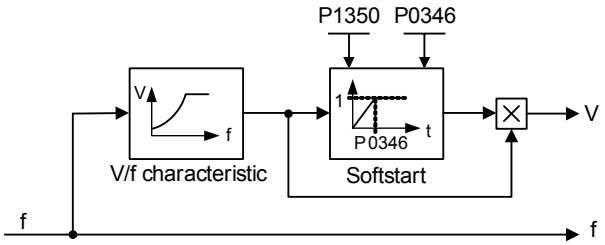

Possible Settings:

0 OFF
1 ON

Index:

P1350[0] : 1st. Drive data set (DDS)
P1350[1] : 2nd. Drive data set (DDS)
P1350[2] : 3rd. Drive data set (DDS)

Note:

The settings for this parameter bring benefits and drawbacks:

- P1350 = 0: (jump to boost voltage)
  Benefit: flux is built up quickly
  Drawback: motor may move
- P1350 = 1: (smooth voltage build-up)
  Benefit: motor less likely to move
  Drawback: flux build-up takes longer

3.29.2 Field-orientated vector control

P1400[3]	Configuration of speed control			Min: 0	Level
	CStat: CUT	Datatype: U16	Unit: -	Def: 1	3
	P-Group: CONTROL	Active: Immediately	QuickComm.: No	Max: 3	

Configuration for speed control.

Bitfields:

Bit00	Automatic Kp adaption	0	NO	1	YES
Bit01	Integral freeze (SLVC)	0	NO	1	YES

Index:

P1400[0] : 1st. Drive data set (DDS)
P1400[1] : 2nd. Drive data set (DDS)
P1400[2] : 3rd. Drive data set (DDS)

Note:

P1400 Bit 00 = 1:
Automatic gain adaption of speed controller is enabled. In the area of field weakening the gain is reduced in dependence on flux.

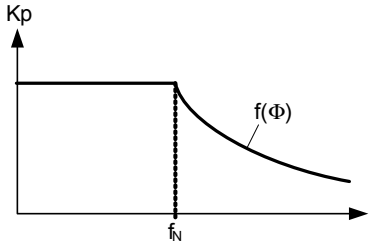

P1400 Bit01 = 1:
The integrator of the speed controller is frozen if Sensorless Vector Control (SLVC) is selected and the control is switched from closed-loop to open-loop operation.
Advantage:
The correct amount of slip compensation is calculated and applied to the open-loop function for a motor under load.

r1407	CO/BO: Status 2 of motor control			Min: -	Level
		Datatype: U16	Unit: -	Def: -	3
	P-Group: CONTROL			Max: -	

Displays status of motor control, which can be used to diagnose inverter status.

Bitfields:

Bit00	V/f control enable	0	NO	1	YES
Bit01	SLVC enable	0	NO	1	YES
Bit02	Torque control enable	0	NO	1	YES
Bit05	Stop I-comp. speed control	0	NO	1	YES
Bit06	Set I-comp. speed controller	0	NO	1	YES
Bit08	Upper torque limit active	0	NO	1	YES
Bit09	Lower torque limit active	0	NO	1	YES
Bit10	Enable droop	0	NO	1	YES
Bit15	DDS change active	0	NO	1	YES

Details:

See P052 (CO/BO: Status word 1)

r1438	CO: Freq. setpoint to controller			Min: -	Level
		Datatype: Float	Unit: Hz	Def: -	3
	P-Group: CONTROL			Max: -	

Displays setpoint of speed controller.

3.29.2.1 Speed controller with/without encoder

P1442[3]	**Filter time for act. speed**			**Min:** 0	evel **3**
	CStat: CUT	**Datatype:** U16	**Unit:** ms	**Def:** 4	
	P-Group: CONTROL	**Active:** Immediately	**QuickComm.:** No	**Max:** 32000	

Sets time constant of PT1 filter to smooth actual speed of speed controller.

Index:

P1442[0] : 1st. Drive data set (DDS)
P1442[1] : 2nd. Drive data set (DDS)
P1442[2] : 3rd. Drive data set (DDS)

r1445	**CO: Act. filtered frequency 2**			**Min:** -	Level **4**
		Datatype: Float	**Unit:** Hz	**Def:** -	
	P-Group: CONTROL			**Max:** -	

Displays filtered actual frequency at speed controller input.

P1452[3]	**Filter time for act. freq (SLVC)**			**Min:** 0	Level **3**
	CStat: CUT	**Datatype:** U16	**Unit:** ms	**Def:** 4	
	P-Group: CONTROL	**Active:** Immediately	**QuickComm.:** No	**Max:** 32000	

Sets time constant of PT1 filter to filter the frequency deviation of speed controller in operation mode SLVC (sensorless vector control).

Index:

P1452[0] : 1st. Drive data set (DDS)
P1452[1] : 2nd. Drive data set (DDS)
P1452[2] : 3rd. Drive data set (DDS)

P1460[3]	**Gain speed controller**			**Min:** 0.0	Level **2**
	CStat: CUT	**Datatype:** Float	**Unit:** -	**Def:** 3.0	
	P-Group: CONTROL	**Active:** Immediately	**QuickComm.:** No	**Max:** 2000.0	

Enters gain of speed controller.

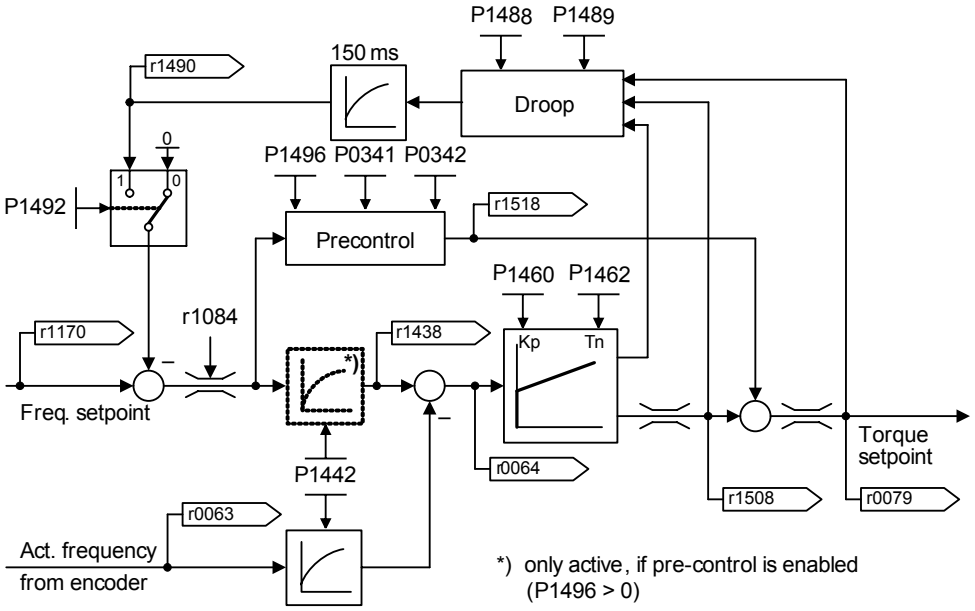

Index:

P1460[0] : 1st. Drive data set (DDS)
P1460[1] : 2nd. Drive data set (DDS)
P1460[2] : 3rd. Drive data set (DDS)

P1462[3]	**Integral time speed controller**			**Min:** 25	Level **2**
	CStat: CUT	**Datatype:** U16	**Unit:** ms	**Def:** 400	
	P-Group: CONTROL	**Active:** Immediately	**QuickComm.:** No	**Max:** 32001	

Enters integral time of speed controller.

Index:

P1462[0] : 1st. Drive data set (DDS)
P1462[1] : 2nd. Drive data set (DDS)
P1462[2] : 3rd. Drive data set (DDS)

P1470[3]	**Gain speed controller (SLVC)**			**Min:** 0.0	Level
	CStat: CUT	**Datatype:** Float	**Unit:** -	**Def:** 3.0	**2**
	P-Group: CONTROL	**Active:** Immediately	**QuickComm.:** No	**Max:** 2000.0	

Enters gain of speed controller for sensorless vector control (SLVC).

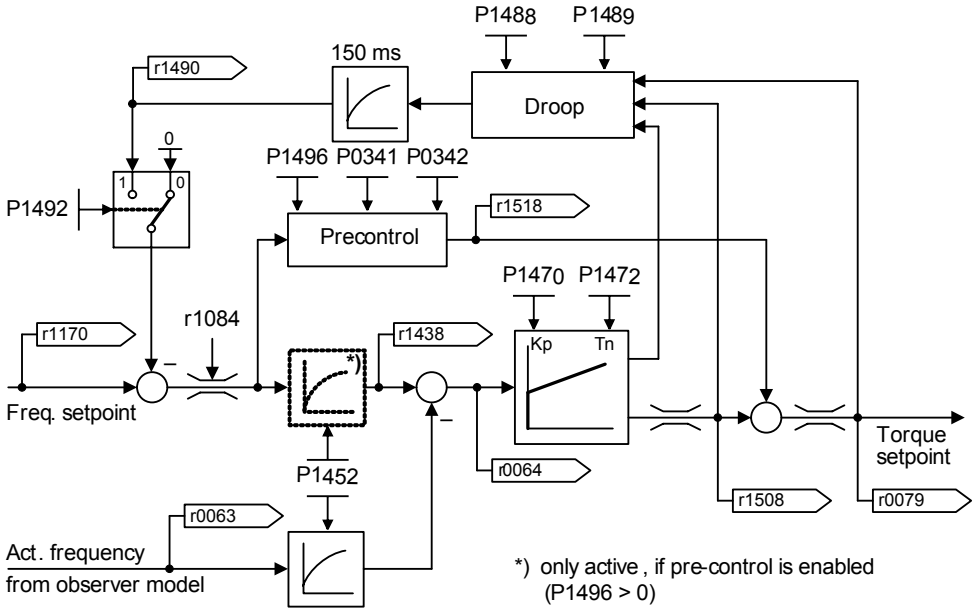

Index:

P1470[0] : 1st. Drive data set (DDS)
P1470[1] : 2nd. Drive data set (DDS)
P1470[2] : 3rd. Drive data set (DDS)

P1472[3]	**Integral time n-ctrl. (SLVC)**			**Min:** 25	Level
	CStat: CUT	**Datatype:** U16	**Unit:** ms	**Def:** 400	**2**
	P-Group: CONTROL	**Active:** Immediately	**QuickComm.:** No	**Max:** 32001	

Enters integral time of speed controller for sensorless vector control (SLVC).

Index:

P1472[0] : 1st. Drive data set (DDS)
P1472[1] : 2nd. Drive data set (DDS)
P1472[2] : 3rd. Drive data set (DDS)

P1477[3]	**BI: Set integrator of n-ctrl.**			**Min:** 0:0	Level
	CStat: CUT	**Datatype:** U32	**Unit:** -	**Def:** 0:0	**3**
	P-Group: CONTROL	**Active:** first confirm	**QuickComm.:** No	**Max:** 4000:0	

Selects source to read in command to enable speed controller.

Index:

P1477[0] : 1st. Command data set (CDS)
P1477[1] : 2nd. Command data set (CDS)
P1477[2] : 3rd. Command data set (CDS)

P1478[3]	**CI: Set integrator value n-ctrl.**			**Min:** 0:0	Level
	CStat: UT	**Datatype:** U32	**Unit:** -	**Def:** 0:0	**3**
	P-Group: CONTROL	**Active:** first confirm	**QuickComm.:** No	**Max:** 4000:0	

Selects source for integral part of speed controller.

Index:

P1478[0] : 1st. Command data set (CDS)
P1478[1] : 2nd. Command data set (CDS)
P1478[2] : 3rd. Command data set (CDS)

Dependency:

In case of sensorless vector control, integrator freezing must be selected (Bit 1 "Integral freeze (SLVC)" of P1400 has to be set) to save the integrator output.

Note:

- If the setting command is not connected (P1477=0), a pending value is read in after pulse enable at the end of the excitation time (P0346) and the integral component of the speed controller is set once.
- If the P1482 (integral component of speed controller) is connected upon pulse enable, the integral component of the controller is set to the last value prior the pulse inhibit.
- Neither function works after flying start.

r1482	**CO: Integral output of n-ctrl.**			**Min:** -	Level
		Datatype: Float	**Unit:** Nm	**Def:** -	**3**
	P-Group: CONTROL			**Max:** -	

Displays integral part of speed controller output.

3.29.2.2 Droop

P1488[3]	**Droop input source**			**Min:** 0	Level
	CStat: CUT	**Datatype:** U16	**Unit:** -	**Def:** 0	**3**
	P-Group: CONTROL	**Active:** first confirm	**QuickComm.:** No	**Max:** 3	

Selects source of droop input signal.

With mechanically coupled motors it is very important that an even load distribution is applied to each motor. The load sharing can be achieved by enabling the droop function on both inverters.

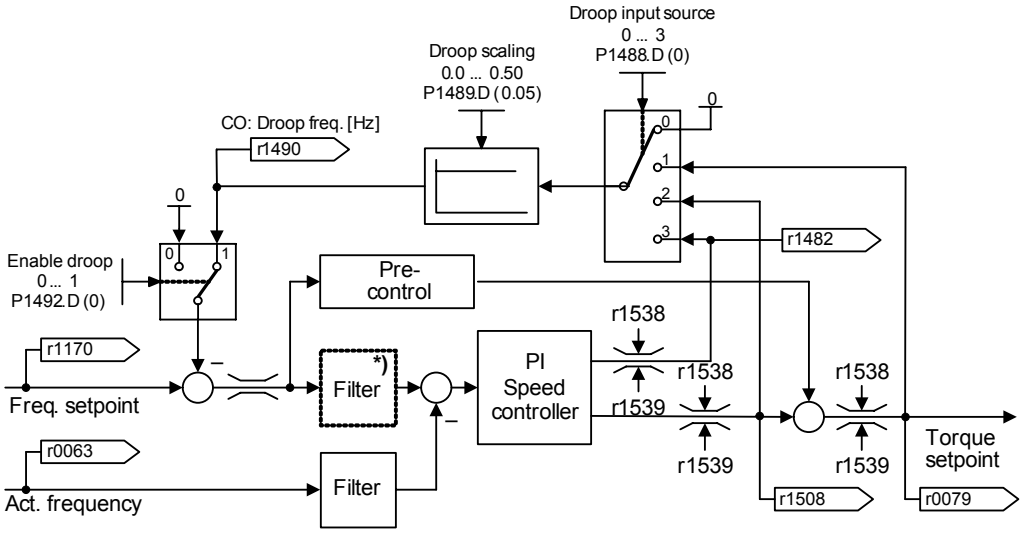

*) only active, if pre-control is enabled (P1496 > 0)

1. Droop is applied as a frequency setpoint on each inverter.
   The droop increases the slip via the negative feedback of the torque setpoint to the frequency setpoint.
   In a steady-state an even load distribution can be achieved if the slip characteristics are identical.
   - P1488 > 0
   - P1489 > 0
   - P1492 = 1

2. Droop can act as a setpoint or limitation for a group of inverters (i.e. master-slave inverters)
   By use of the master-slave inverter technique an even load distribution is achieved across the whole application.
   This is accomplished by setting the torque setpoint (r1490) on the master inverter which then controls the frequency of the master inverter and all connected slave inverters.
   - P1488 > 0
   - P1489 > 0
   - P1492 = 0

Possible Settings:

0 Droop input disabled
1 Torque setpoint
2 Speed controller output
3 Speed controller integral output

Index:

P1488[0] : 1st. Drive data set (DDS)
P1488[1] : 2nd. Drive data set (DDS)
P1488[2] : 3rd. Drive data set (DDS)

Dependency:

Droop scaling (P1489) must be > 0 for droop to be effective.

P1489[3]	**Droop scaling**			**Min:** 0.00	Level
	CStat: CUT	**Datatype:** Float	**Unit:** -	**Def:** 0.05	**3**
	P-Group: CONTROL	**Active:** Immediately	**QuickComm.:** No	**Max:** 0.50	

Defines amount of droop in per unit at full load in [%].

Index:

P1489[0] : 1st. Drive data set (DDS)
P1489[1] : 2nd. Drive data set (DDS)
P1489[2] : 3rd. Drive data set (DDS)

Note:

If 0 is entered as value, no droop is applied.

r1490	**CO: Droop frequency**			**Min:** -	Level
		Datatype: Float	**Unit:** Hz	**Def:** -	**3**
	P-Group: CONTROL			**Max:** -	

Displays output signal of droop function.

This result of droop calculation is subtracted from the speed controller setpoint.

P1492[3]	**Enable droop**			**Min:** 0	Level
	CStat: CUT	**Datatype:** U16	**Unit:** -	**Def:** 0	**3**
	P-Group: CONTROL	**Active:** first confirm	**QuickComm.:** No	**Max:** 1	

Enables droop.

Possible Settings:

0 Disabled
1 Enabled

Index:

P1492[0] : 1st. Drive data set (DDS)
P1492[1] : 2nd. Drive data set (DDS)
P1492[2] : 3rd. Drive data set (DDS)

Dependency:

Effective only if droop scaling P1489 > 0.

3.29.2.3 Speed controller pre-control

P1496[3]	**Scaling accel. precontrol**				**Min:** 0.0	Level
	CStat: CUT	**Datatype:** Float	**Unit:** %		**Def:** 0.0	**3**
	P-Group: CONTROL	**Active:** Immediately	**QuickComm.:** No		**Max:** 400.0	

Enters scaling of acceleration in [%].

The response of setpoint changes for the speed control loop can be improved using the precontrol function (P1496). Precontrol is derived from the differential frequency setpoint multiplied by the mass inertia P0341; P0342 is then supplied as a torque setpoint to the current controller. If the filter (VC: P1442, SLVC: P1452) is applied in the correct manner, the derived speed controller is only required to control a small deviation in the value of the corrected variable. Setpoint changes are then passed by the speed controller and are quickly executed.

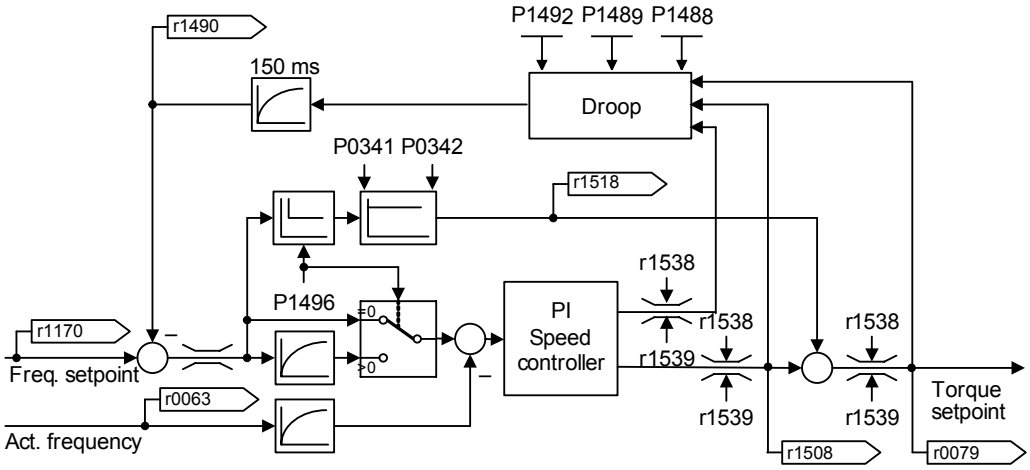

Index:

P1496[0] : 1st. Drive data set (DDS)
P1496[1] : 2nd. Drive data set (DDS)
P1496[2] : 3rd. Drive data set (DDS)

Note:

P1496 = 0:
Precontrol disabled

P1496 > 0:
Precontrol enabled

P1496 = 100:
Standard setting for precontrol

P1499[3]	**Scaling accel. torque control**				**Min:** 0.0	Level
	CStat: CUT	**Datatype:** Float	**Unit:** %		**Def:** 100.0	**3**
	P-Group: CONTROL	**Active:** Immediately	**QuickComm.:** No		**Max:** 400.0	

Enters scaling of acceleration in [%] for sensorless torque control (SLVC) at low frequencies.

Index:

P1499[0] : 1st. Drive data set (DDS)
P1499[1] : 2nd. Drive data set (DDS)
P1499[2] : 3rd. Drive data set (DDS)

3.29.2.4 Torque control

P1500[3]	Selection of torque setpoint				Min: 0	Level
	CStat: CT	Datatype: U16	Unit: -		Def: 0	2
	P-Group: CONTROL	Active: first confirm	QuickComm.: Yes		Max: 77	

Selects torque setpoint source. In the table of possible settings below, the main setpoint is selected from the least significant digit (i.e., 0 to 7) and any additional setpoint from the most significant digit (i.e., x0 through to x7).

Possible Settings:

0 No main setpoint
2 Analog setpoint
4 USS on BOP link
5 USS on COM link
6 CB on COM link
7 Analog setpoint 2
20 No main setpoint + Analog setpoint
22 Analog setpoint + Analog setpoint
24 USS on BOP link + Analog setpoint
25 USS on COM link + Analog setpoint
26 CB on COM link + Analog setpoint
27 Analog setpoint 2 + Analog setpoint
40 No main setpoint + USS on BOP link
42 Analog setpoint + USS on BOP link
44 USS on BOP link + USS on BOP link
45 USS on COM link + USS on BOP link
46 CB on COM link + USS on BOP link
47 Analog setpoint 2 + USS on BOP link
50 No main setpoint + USS on COM link
52 Analog setpoint + USS on COM link
54 USS on BOP link + USS on COM link
55 USS on COM link + USS on COM link
57 Analog setpoint 2 + USS on COM link
60 No main setpoint + CB on COM link
62 Analog setpoint + CB on COM link
64 USS on BOP link + CB on COM link
66 CB on COM link + CB on COM link
67 Analog setpoint 2 + CB on COM link
70 No main setpoint + Analog setpoint 2
72 Analog setpoint + Analog setpoint 2
74 USS on BOP link + Analog setpoint 2
75 USS on COM link + Analog setpoint 2
76 CB on COM link + Analog setpoint 2
77 Analog setpoint 2 + Analog setpoint 2

Index:

P1500[0] : 1st. Command data set (CDS)
P1500[1] : 2nd. Command data set (CDS)
P1500[2] : 3rd. Command data set (CDS)

Example:

Setting 24 selects the main setpoint (4) derived from the USS on BOP link with the additional setpoint (2) derived from the analog input. Single digits are main setpoints only with no additional setpoint.

Example P1500 = 24 :

P1500 = **2**4 ⇒ P1503 = 755.0	P1503 CI: Torque setpoint
	r0755 CO: Act. ADC after scal. [4000h]
P1500 = 2**4** ⇒ P1511 = r2015.1	P1511 CI: Additional torque setpoint
	r2015 CO: PZD from BOP link (USS)

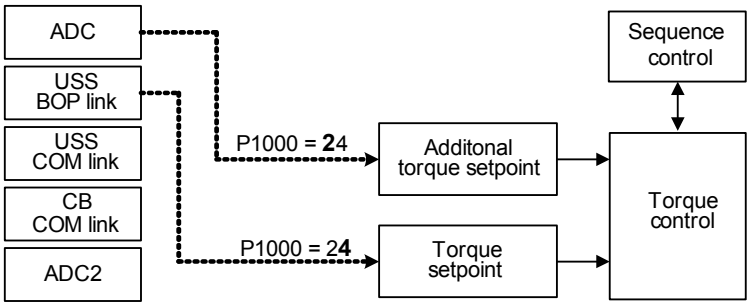

Caution:

Be aware, by changing of parameter P1500 all BICO parameters (see table below) are modified.

Note:

Changing this parameter sets (to default) all settings on item selected (see table).

P1500 = xy		y = 0	y = 2	y = 4	y = 5	y = 6	y = 7	
	x = 0	0.0	755.0	2015.1	2018.1	2050.1	755.1	P1503
		0.0	0.0	0.0	0.0	0.0	0.0	P1511
	x = 2	0.0	755.0	2015.1	2018.1	2050.1	755.1	P1503
		755.0	755.0	755.0	755.0	755.0	755.0	P1511
	x = 4	0.0	755.0	2015.1	2018.1	2050.1	755.1	P1503
		2015.1	2015.1	2015.1	2015.1	2015.1	2015.1	P1511
	x = 5	0.0	755.0	2015.1	2018.1		755.1	P1503
		2018.1	2018.1	2018.1	2018.1		2018.1	P1511
	x = 6	0.0	755.0	2015.1		2050.1	755.1	P1503
		2050.1	2050.1	2050.1		2050.1	2050.1	P1511
	x = 7	0.0	755.0	2015.1	2018.1	2050.1	755.1	P1503
		755.1	755.1	755.1	755.1	755.1	755.1	P1511

Example:

P1500 = 24 → P1503 = 2015.1
P1511 = 755.0

P1501[3]	BI: Change to torque control				Min: 0:0	Level
	CStat: CT	Datatype: U32	Unit: -		Def: 0:0	3
	P-Group: CONTROL	Active: first confirm	QuickComm.: No		Max: 4000:0	

Selects command source from which it is possible to change between master (speed control) and slave (torque control).

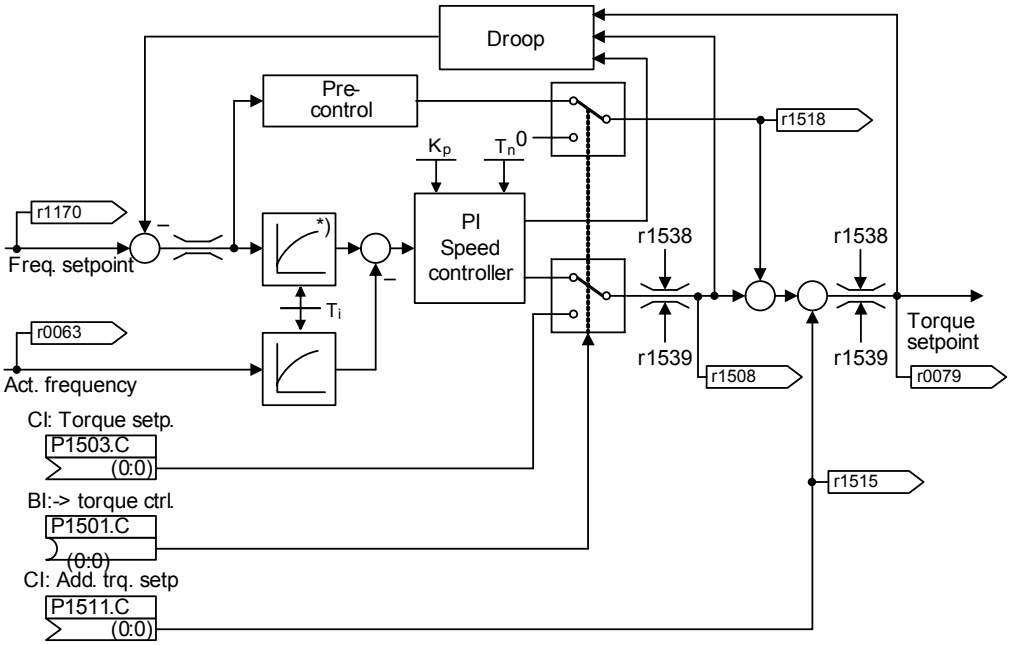

*) only active, if pre-control is enabled (P1496 > 0)

	T_i	K_p	T_n
SLVC:	P1452	P1470	P1472
VC:	P1442	P1460	P1462

Index:

P1501[0] : 1st. Command data set (CDS)
P1501[1] : 2nd. Command data set (CDS)
P1501[2] : 3rd. Command data set (CDS)

Caution:

If direct selection of torque control is used (P1300=22, 23) the OFF1 command is recognized as OFF2.

However, the OFF1 command is not recognized when torque control is selected indirectly (P1300=20, 21 and P1501=1). If indirect selection of torque control is used, it is recommended to program an OFF2 command using, for example a digital input or create the following circuit using the Free Function Blocks (FFB):

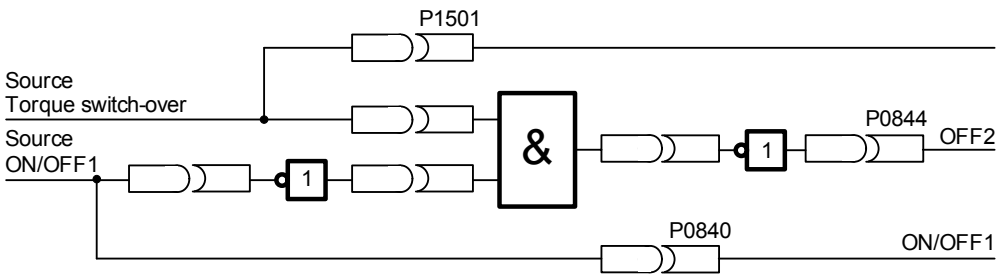

Details:

Speed control with encoder feedback see P1460
Speed control without encoder feedback see P1470

P1503[3]	**CI: Torque setpoint**			**Min:**	0:0	Level **3**
	CStat: T	**Datatype:** U32	**Unit:** -	**Def:**	0:0	
	P-Group: CONTROL	**Active:** first confirm	**QuickComm.:** No	**Max:**	4000:0	

Selects source of torque setpoint for torque control.

Index:

P1503[0] : 1st. Command data set (CDS)
P1503[1] : 2nd. Command data set (CDS)
P1503[2] : 3rd. Command data set (CDS)

Details:

See parameter P1501.

r1508	**CO: Torque setpoint**			**Min:**	-	Level **2**
		Datatype: Float	**Unit:** Nm	**Def:**	-	
	P-Group: CONTROL			**Max:**	-	

Displays torque setpoint before limitation.

Details:

See parameter P1501.

3.29.2.5 Supplementary torque setpoint

P1511[3]	**CI: Additional torque setpoint**			**Min:**	0:0	Level **3**
	CStat: T	**Datatype:** U32	**Unit:** -	**Def:**	0:0	
	P-Group: CONTROL	**Active:** first confirm	**QuickComm.:** No	**Max:**	4000:0	

Selects source of additional torque setpoint for torque and speed control.

Index:

P1511[0] : 1st. Command data set (CDS)
P1511[1] : 2nd. Command data set (CDS)
P1511[2] : 3rd. Command data set (CDS)

Details:

See parameter P1501.

r1515	**CO: Additional torque setpoint**			**Min:**	-	Level **2**
		Datatype: Float	**Unit:** Nm	**Def:**	-	
	P-Group: CONTROL			**Max:**	-	

Displays additional torque setpoint.

Details:

See parameter P1501.

r1518	**CO: Acceleration torque**			**Min:**	-	Level **3**
		Datatype: Float	**Unit:** Nm	**Def:**	-	
	P-Group: CONTROL			**Max:**	-	

Displays acceleration torque.

Details:

See parameter P1501.

P1520[3]	**CO: Upper torque limit**			**Min:**	-99999.00	Level **2**
	CStat: CUT	**Datatype:** Float	**Unit:** Nm	**Def:**	5.13	
	P-Group: CONTROL	**Active:** Immediately	**QuickComm.:** No	**Max:**	99999.00	

Specifies fixed value for upper torque limitation.

$$P1520_{def} = 1.5 \cdot r0333$$
$$P1520_{max} = \pm 4 \cdot r0333$$

Index:

P1520[0] : 1st. Drive data set (DDS)
P1520[1] : 2nd. Drive data set (DDS)
P1520[2] : 3rd. Drive data set (DDS)

3.29.2.6 Torque / power limiting

P1521[3]	CO: Lower torque limit			Min: -99999.00	Level
	CStat: CUT	Datatype: Float	Unit: Nm	Def: -5.13	2
	P-Group: CONTROL	Active: Immediately	QuickComm.: No	Max: 99999.00	

Enters fixed value of lower torque limitation.

$P1521_{def} = -1.5 \cdot r0333$

$P1521_{max} = \pm 4 \cdot r0333$

Index:

P1521[0] : 1st. Drive data set (DDS)
P1521[1] : 2nd. Drive data set (DDS)
P1521[2] : 3rd. Drive data set (DDS)

P1522[3]	CI: Upper torque limit			Min: 0:0	Level
	CStat: T	Datatype: U32	Unit: -	Def: 1520:0	3
	P-Group: CONTROL	Active: first confirm	QuickComm.: No	Max: 4000:0	

Selects source of upper torque limitation.

Index:

P1522[0] : 1st. Command data set (CDS)
P1522[1] : 2nd. Command data set (CDS)
P1522[2] : 3rd. Command data set (CDS)

P1523[3]	CI: Lower torque limit			Min: 0:0	Level
	CStat: T	Datatype: U32	Unit: -	Def: 1521:0	3
	P-Group: CONTROL	Active: first confirm	QuickComm.: No	Max: 4000:0	

Selects source of lower torque limitation.

Index:

P1523[0] : 1st. Command data set (CDS)
P1523[1] : 2nd. Command data set (CDS)
P1523[2] : 3rd. Command data set (CDS)

P1525[3]	Scaling lower torque limit			Min: -400.0	Level
	CStat: CUT	Datatype: Float	Unit: %	Def: 100.0	3
	P-Group: CONTROL	Active: Immediately	QuickComm.: No	Max: 400.0	

Enters scaling of lower torque limitation in [%].

Index:

P1525[0] : 1st. Drive data set (DDS)
P1525[1] : 2nd. Drive data set (DDS)
P1525[2] : 3rd. Drive data set (DDS)

Note:

P1525 = 100 % = standard setting

r1526	CO: Upper torque limitation			Min: -	Level
		Datatype: Float	Unit: Nm	Def: -	3
	P-Group: CONTROL			Max: -	

Displays actual upper torque limitation.

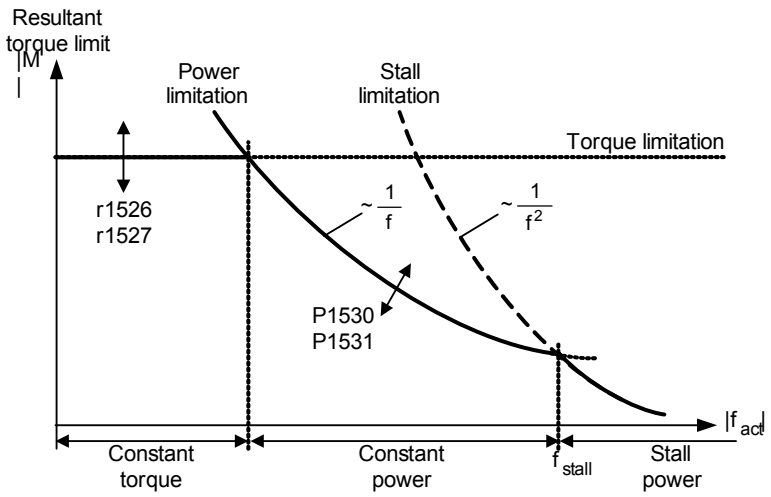

Dependency:

The parameters r1526 and r1527 depend on P1520, P1521, P1522, P1523 and P1525.

r1527	**CO: Lower torque limitation**			**Min:** -	Level
		Datatype: Float	**Unit:** Nm	**Def:** -	**3**
	P-Group: CONTROL			**Max:** -	

Displays actual lower torque limitation.

Details:

See parameter r1526.

P1530[3]	**Motoring power limitation**			**Min:** 0.00	Level
	CStat: CUT	**Datatype:** Float	**Unit:** -	**Def:** 0.12	**2**
	P-Group: CONTROL	**Active:** Immediately	**QuickComm.:** No	**Max:** 8000.00	

Defines fixed value for the max. permissible motoring active power (motoring power limitation).

$$P1530_{def} = 2.5 \cdot P0307$$
$$P1530_{max} = 3 \cdot P0307$$

Parameter P1530 limits the torque in addition to the act. frequency as displayed in the following characteristic.

Power limitation (motoring, regenerative)

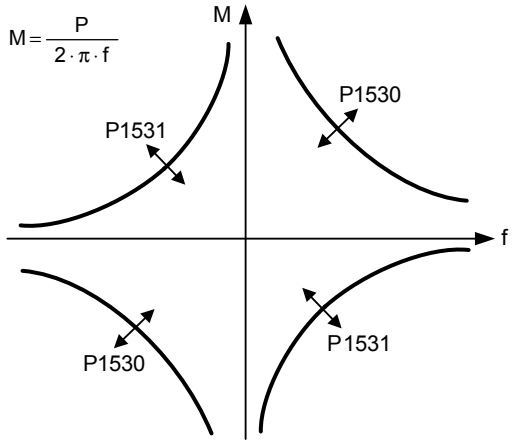

Index:

P1530[0] : 1st. Drive data set (DDS)
P1530[1] : 2nd. Drive data set (DDS)
P1530[2] : 3rd. Drive data set (DDS)

P1531[3]	**Regenerative power limitation**			**Min:** -8000.00	Level
	CStat: CUT	**Datatype:** Float	**Unit:** -	**Def:** -0.12	**2**
	P-Group: CONTROL	**Active:** Immediately	**QuickComm.:** No	**Max:** 0.00	

Enters fixed value for the max. permissible regenerative active power (regenerative power limitation).

$$P1531_{def} = -2.5 \cdot P0307$$
$$P1531_{max} = -3 \cdot P0307$$

Index:

P1531[0] : 1st. Drive data set (DDS)
P1531[1] : 2nd. Drive data set (DDS)
P1531[2] : 3rd. Drive data set (DDS)

Details:

See parameter P1530.

r1536	**CO: Max. trq. motoring current**			**Min:** -	Level
		Datatype: Float	**Unit:** A	**Def:** -	**4**
	P-Group: CONTROL			**Max:** -	

Displays maximum torque motoring current component.

r1537	**CO: Max trq regenerative current**			**Min:** -	Level
		Datatype: Float	**Unit:** A	**Def:** -	**4**
	P-Group: CONTROL			**Max:** -	

Displays maximum torque of the regenerative current component.

r1538	CO: Upper torque limit (total)			Min: -	Level
		Datatype: Float	Unit: Nm	Def: -	2
	P-Group: CONTROL			Max: -	

Displays total upper torque limitation.

Torque limitation:

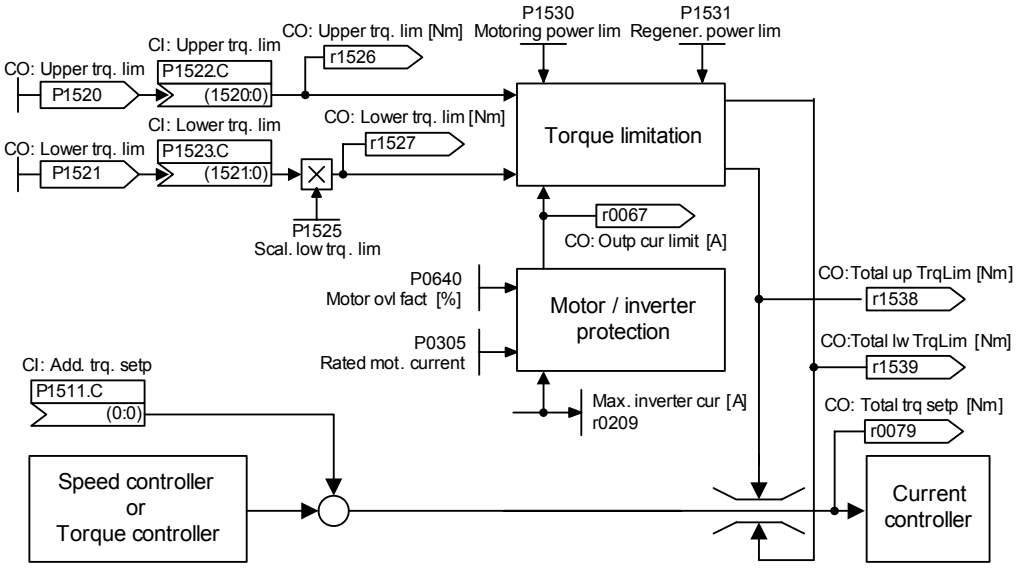

r1539	CO: Lower torque limit (total)			Min: -	Level
		Datatype: Float	Unit: Nm	Def: -	2
	P-Group: CONTROL			Max: -	

Displays total lower torque limitation.

Details:

See parameter r1538.

3.29.2.7 Flux control

P1570[3]	CO: Fixed value flux setpoint			Min: 50.0	Level
	CStat: CUT	Datatype: Float	Unit: %	Def: 107.0	2
	P-Group: CONTROL	Active: Immediately	QuickComm.: No	Max: 200.0	

Parameter to set the flux setpoint as a % relative to the rated motor flux.

Index:

P1570[0] : 1st. Drive data set (DDS)
P1570[1] : 2nd. Drive data set (DDS)
P1570[2] : 3rd. Drive data set (DDS)

Note:

- In the base speed range, the flux setpoint P1570 is converted into the field-generating current component isd (P1570 = 100% corresponds to r0331).
- For values below 100%, the drive is under-magnetized and above this, is over-magnetized.
- If P1570 is set to more than 100%, then the flux setpoint, depending on the load, is increased from 100% (under no-load conditions) to this value (under rated load, refer to the diagram).
- If in so doing, the maximum drive inverter output voltage is reached, the rotor flux is reduced in order to keep the output voltage constant (or the EMF) with increasing speed.
- The maximum possible output voltage r0071 of the drive inverter is determined by the DC link voltage r0026 and the maximum modulation depth P1803 in the gating unit.

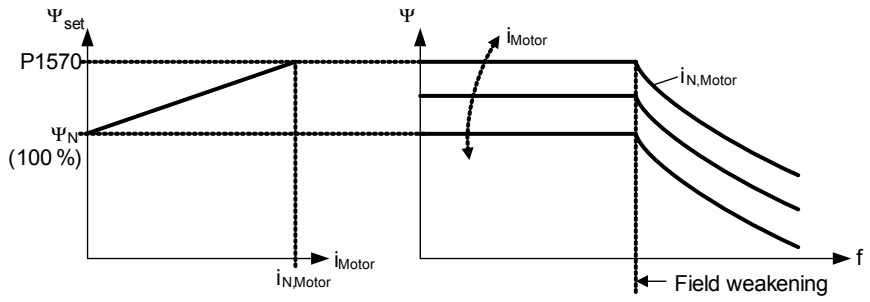

P1574[3]	**Dynamic voltage headroom**			**Min:** 0	Level
	CStat: CUT	**Datatype:** U16	**Unit:** V	**Def:** 10	**3**
	P-Group: CONTROL	**Active:** Immediately	**QuickComm.:** No	**Max:** 150	

Sets dynamic voltage headroom for vector control.

If max. output voltage is reached, the voltage headroom is used for balancing lead values and disturbances. Parameter P1574 gives a control-reserve, that is valid also in field weakening

Index:

P1574[0] : 1st. Drive data set (DDS)
P1574[1] : 2nd. Drive data set (DDS)
P1574[2] : 3rd. Drive data set (DDS)

Note:

- Increasing of the reserve decreases the maximum output voltage (r0071).
- Decreasing the voltage headroom can lead to instabilities of the control.

P1580[3]	**Efficiency optimization**			**Min:** 0	Level
	CStat: CUT	**Datatype:** U16	**Unit:** %	**Def:** 0	**2**
	P-Group: CONTROL	**Active:** Immediately	**QuickComm.:** No	**Max:** 100	

The efficiency for load-dependent magnetization can be optimized using parameter P1580.

P1580 = 0% :
No load-dependent magnetization (de-activated)

P1580 > 0% :
Load-dependent magnetization activated

When the flux is decreased, the motor stator losses in the partial load range are reduced. When the load increases, the setpoint flux increases and therefore the magnetizing current corresponding to the torque-generating current.

Index:

P1580[0] : 1st. Drive data set (DDS)
P1580[1] : 2nd. Drive data set (DDS)
P1580[2] : 3rd. Drive data set (DDS)

Note:

- When using the optimization routine, it is necessary to increase the smoothing time of the flux setpoint (P1582).
- The load-dependent magnetization (P1580 > 0) in the partial load range restricts the dynamic performance of the drive.
- Under no-load conditions, a value of 100 % represents the full flux reduction (i.e. 50 % of the rated motor flux, refer to the diagram).

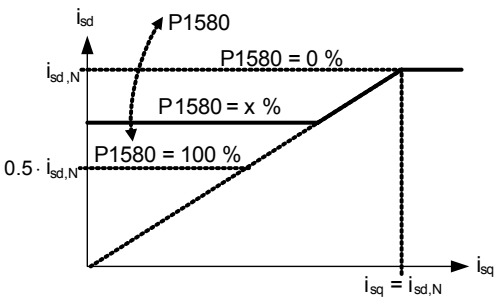

- P1580 can be activated at the same time with P1570. This allows an optimum adaptation both under no-load conditions/in the partial load range using P1580 as well as in the full load range using P1570.

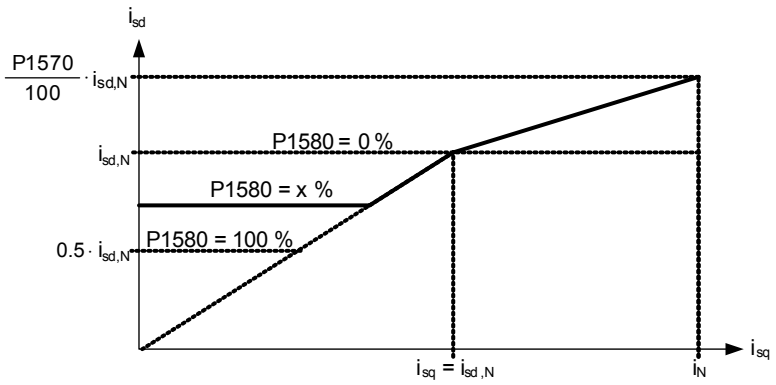

P1582[3]	**Smooth time for flux setpoint**			**Min:** 4	Level
	CStat: CUT	**Datatype:** U16	**Unit:** ms	**Def:** 15	**3**
	P-Group: CONTROL	**Active:** Immediately	**QuickComm.:** No	**Max:** 500	

Sets time constant of PT1 filter to smooth flux setpoint.

Index:

P1582[0] : 1st. Drive data set (DDS)
P1582[1] : 2nd. Drive data set (DDS)
P1582[2] : 3rd. Drive data set (DDS)

r1583	**CO: Flux setpoint (smoothed)**			**Min:** -	Level
		Datatype: Float	**Unit:** %	**Def:** -	**4**
	P-Group: CONTROL			**Max:** -	

Displays smoothed flux setpoint in [%] relative to rated motor flux.

P1596[3]	**Int. time field weak. controller**			**Min:** 20	Level
	CStat: CUT	**Datatype:** U16	**Unit:** ms	**Def:** 50	**3**
	P-Group: CONTROL	**Active:** Immediately	**QuickComm.:** No	**Max:** 32001	

Sets integral time for field weakening controller.

Index:

P1596[0] : 1st. Drive data set (DDS)
P1596[1] : 2nd. Drive data set (DDS)
P1596[2] : 3rd. Drive data set (DDS)

r1597	**CO: Outp. field weak. controller**			**Min:** -	Level
		Datatype: Float	**Unit:** %	**Def:** -	**4**
	P-Group: CONTROL			**Max:** -	

Displays output signal of field weakening controller in [%] relative to rated motor flux.

r1598	**CO: Flux setpoint (total)**			**Min:** -	Level
		Datatype: Float	**Unit:** %	**Def:** -	**3**
	P-Group: CONTROL			**Max:** -	

Displays total flux setpoint in [%] relative to the rated motor flux.

P1610[3]	**Continuous torque boost (SLVC)**			**Min:** 0.0	Level
	CStat: CUT	**Datatype:** Float	**Unit:** %	**Def:** 50.0	**2**
	P-Group: CONTROL	**Active:** Immediately	**QuickComm.:** No	**Max:** 200.0	

Sets the constant torque boost for the low frequency range when sensorless closed-loop vector control is being used (SLVC). The parameter is entered as a % referred to the rated motor torque (r0333).

For sensorless closed-loop vector control, when the motor model is disabled, an absolute current is impressed. P1610 represents the maximum load that occurs at a constant setpoint.

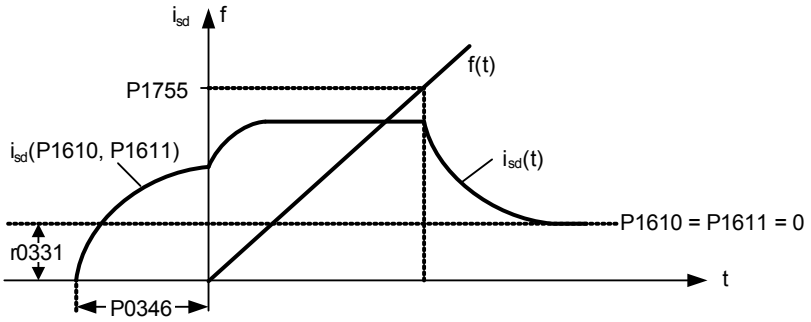

Index:

P1610[0] : 1st. Drive data set (DDS)
P1610[1] : 2nd. Drive data set (DDS)
P1610[2] : 3rd. Drive data set (DDS)

Caution:

P1610 should always be set at least 10% higher than the maximum steady-state load that occurs.

Note:

- For P1610 = 0 %, a current setpoint is calculated that corresponds to the no-load case (rated magnetization current).
- For P1610 = 100 %, a current setpoint is calculated that corresponds to the rated motor torque.

P1611[3]	Acc. torque boost (SLVC)			Min: 0.0	Level
	CStat: CUT	Datatype: Float	Unit: %	Def: 0.0	2
	P-Group: CONTROL	Active: Immediately	QuickComm.: No	Max: 200.0	

Enters the dynamic torque boost for the low frequency range for sensorless closed-loop vector control (SLVC). The parameter is entered as a % referred to the rated motor torque (r0333).

Index:

P1611[0] : 1st. Drive data set (DDS)
P1611[1] : 2nd. Drive data set (DDS)
P1611[2] : 3rd. Drive data set (DDS)

Note:

- When accelerating and braking, P1611 is added to P1610 and the resulting total torque is converted into an appropriate current setpoint and controlled (closed-loop).
- For pure accelerating torques, it is always more favorable to utilize the torque pre-control of the speed controller (P1496).

3.29.2.8 Current controller

P1654[3]	Smooth time for Isq setpoint			Min: 2.0	Level
	CStat: CUT	Datatype: Float	Unit: ms	Def: 6.0	4
	P-Group: CONTROL	Active: Immediately	QuickComm.: No	Max: 20.0	

Sets time constant of PT1 filter to filter setpoint of torque generating current component in field weakening range.

Index:

P1654[0] : 1st. Drive data set (DDS)
P1654[1] : 2nd. Drive data set (DDS)
P1654[2] : 3rd. Drive data set (DDS)

P1715[3]	Gain current controller			Min: 0.00	Level
	CStat: CUT	Datatype: Float	Unit: -	Def: 0.25	4
	P-Group: CONTROL	Active: Immediately	QuickComm.: No	Max: 5.00	

Enters gain of current controller.

Index:

P1715[0] : 1st. Drive data set (DDS)
P1715[1] : 2nd. Drive data set (DDS)
P1715[2] : 3rd. Drive data set (DDS)

P1717[3]	Integral time current controller			Min: 1.0	Level
	CStat: CUT	Datatype: Float	Unit: ms	Def: 4.1	4
	P-Group: CONTROL	Active: Immediately	QuickComm.: No	Max: 50.0	

Enters integral time of current controller.

Index:

P1717[0] : 1st. Drive data set (DDS)
P1717[1] : 2nd. Drive data set (DDS)
P1717[2] : 3rd. Drive data set (DDS)

r1718	CO: Output of Isq controller			Min: -	Level
		Datatype: Float	Unit: V	Def: -	4
	P-Group: CONTROL			Max: -	

Displays actual output of Isq current (torque current) controller (PI controller). It contains the proportional and integral part of the PI controller.

r1719	CO: Integral output of Isq ctrl.			Min: -	Level
		Datatype: Float	Unit: V	Def: -	4
	P-Group: CONTROL			Max: -	

Displays integral output of Isq current (torque current) controller (PI controller).

r1723	CO: Output of Isd controller			Min: -	Level
		Datatype: Float	Unit: V	Def: -	4
	P-Group: CONTROL			Max: -	

Displays actual output of Isd current (flux current) controller (PI controller). It contains the proportional and integral part of the PI controller.

r1724	CO: Integral output of Isd ctrl.			Min: -	Level
		Datatype: Float	Unit: V	Def: -	4
	P-Group: CONTROL			Max: -	

Displays integral output of Isd current (flux current) controller (PI controller).

r1725	CO: Integral limit of Isd ctrl.			Min: -	Level
		Datatype: Float	Unit: V	Def: -	4
	P-Group: CONTROL			Max: -	

Displays limit of integral output voltage setpoint of Isd current controller.

r1728	CO: Decoupling voltage			Min: -	Level
		Datatype: Float	Unit: V	Def: -	4
	P-Group: CONTROL			Max: -	

Displays actual output voltage setpoint of cross channel decoupling.

P1740	Gain for oscillation damping			Min: 0.000	Level
	CStat: CUT	Datatype: Float	Unit: -	Def: 0.000	3
	P-Group: CONTROL	Active: Immediately	QuickComm.: No	Max: 10.000	

Sets the controller gain to dampen oscillations in the sensorless vector control (SLVC) at low frequencies (open-loop).

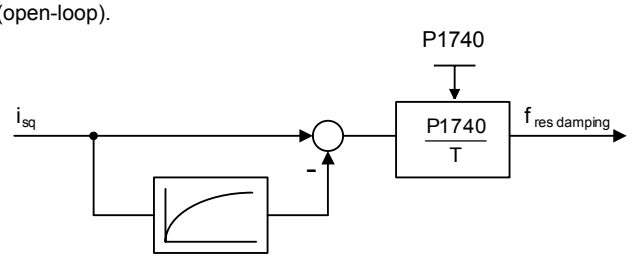

Dependency:

Siehe P1750, P1755, P1756

P1745[3]	Variance flux error			Min: 0.0	Level
	CStat: CUT	Datatype: Float	Unit: %	Def: 5.0	3
	P-Group: CONTROL	Active: Immediately	QuickComm.: No	Max: 1000.0	

Allowed variance error between flux setpoint and measured flux.

Index:

P1745[0] : 1st. Drive data set (DDS)
P1745[1] : 2nd. Drive data set (DDS)
P1745[2] : 3rd. Drive data set (DDS)

r1746	CO: Variance flux error			Min: -	Level
		Datatype: Float	Unit: %	Def: -	3
	P-Group: CONTROL			Max: -	

Variance error between flux setpoint and measured flux.

3.29.2.9 Motor model

P1750[3]	Control word of motor model			Min: 0	Level
	CStat: CUT	Datatype: U16	Unit: -	Def: 0	3
	P-Group: CONTROL	Active: first confirm	QuickComm.: No	Max: 3	

Control word of motor model. This parameter controls the operation of the sensorless vector control (SLVC) at very low frequencies. This therefore includes the following conditions:

- Operation directly after an ON command
- zero crossing.

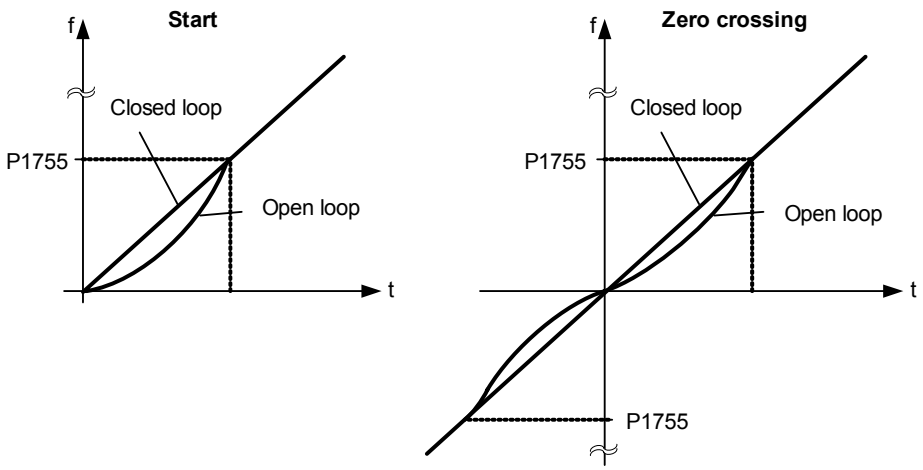

SLVC open loop means that the speed controller does not get any frequency feedback from the observer model.

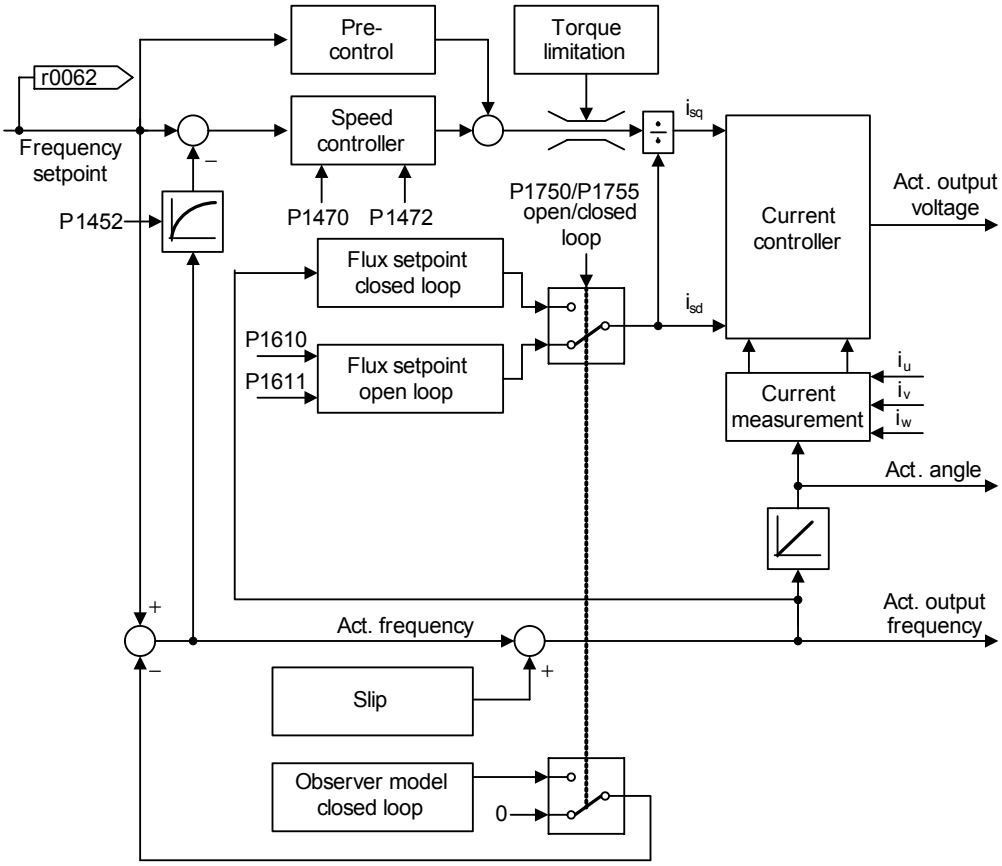

Bitfields:

Bit00	Start SLVC open loop	0	NO	1	YES
Bit01	Zero crossing SLVC open loop	0	NO	1	YES

Index:

P1750[0] : 1st. Drive data set (DDS)
P1750[1] : 2nd. Drive data set (DDS)
P1750[2] : 3rd. Drive data set (DDS)

r1751 Status word of motor model

Datatype: U16 **Unit:** - **Min:** - **Def:** - **Max:** -

P-Group: CONTROL

Level **3**

Displays status of transition from feed-forward to observer-control and vice versa.

Bitfields:

Bit00	Transit to SLVC open loop	0	NO	1	YES
Bit01	N-adaption enabled	0	NO	1	YES
Bit02	Transit to SLVC closed loop	0	NO	1	YES
Bit03	Speed controller enabled	0	NO	1	YES
Bit04	Current injection	0	NO	1	YES
Bit05	Start flux decrease	0	NO	1	YES
Bit14	Rs adapted	0	NO	1	YES
Bit15	Xh adapted	0	NO	1	YES

P1755[3]	**Start-freq. motor model (SLVC)**			**Min:** 0.1	Level
	CStat: CUT	**Datatype:** Float	**Unit:** Hz	**Def:** 5.0	**3**
	P-Group: CONTROL	**Active:** Immediately	**QuickComm.:** No	**Max:** 250.0	

Enter the start frequency of sensorless vector control (SLVC), thereby SLVC switches over from open-loop to closed-loop at that frequency.
The default setting depends on the motor power:
- 0 kW to 0.749 kW: 5.0 Hz
- 0.75 kW to 75 kW: 1.5 Hz
- 75.1 kW to 200 kW: 1.0 Hz

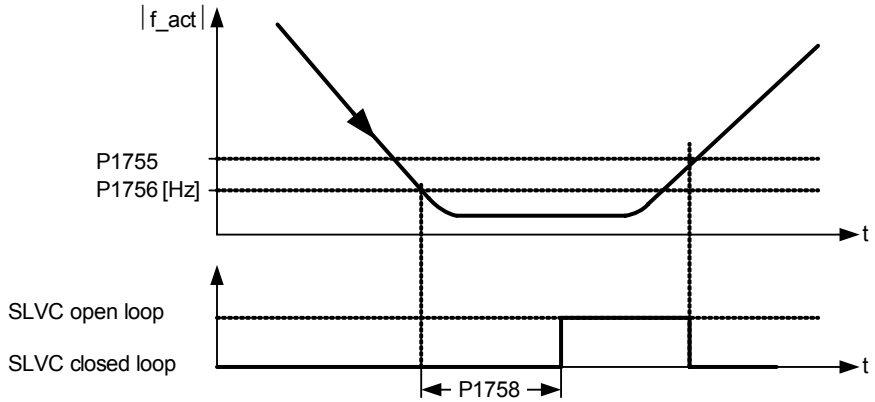

$$P1756[Hz] = P1755[Hz] \cdot \frac{P1756[\%]}{100[\%]}$$

Index:
P1755[0] : 1st. Drive data set (DDS)
P1755[1] : 2nd. Drive data set (DDS)
P1755[2] : 3rd. Drive data set (DDS)

P1756[3]	**Hyst.-freq. motor model (SLVC)**			**Min:** 10.0	Level
	CStat: CUT	**Datatype:** Float	**Unit:** %	**Def:** 50.0	**3**
	P-Group: CONTROL	**Active:** Immediately	**QuickComm.:** No	**Max:** 100.0	

Enters hysteresis frequency (in percent of start-frequency) to switch back from sensorless-vector-control (SLVC) to current model.

Value is entered in the range 0 % to 50 % relative to P1755 (SLVC stop frequency).

Index:
P1756[0] : 1st. Drive data set (DDS)
P1756[1] : 2nd. Drive data set (DDS)
P1756[2] : 3rd. Drive data set (DDS)

P1758[3]	**Chng-ov. del. t SLVC op.-lp ctrl**			**Min:** 100	Level
	CStat: CUT	**Datatype:** U16	**Unit:** ms	**Def:** 1500	**3**
	P-Group: CONTROL	**Active:** Immediately	**QuickComm.:** No	**Max:** 2000	

Sets the minimum time when the changeover frequency is fallen below when changing from the closed-loop into the open-loop controlled mode.

Index:
P1758[0] : 1st. Drive data set (DDS)
P1758[1] : 2nd. Drive data set (DDS)
P1758[2] : 3rd. Drive data set (DDS)

Dependency:
Refer to P1750, P1755, P1756

P1759[3]	**Chng-ov. del. t SLVC cl.-lp ctrl**			**Min:** 50	Level
	CStat: CUT	**Datatype:** U16	**Unit:** ms	**Def:** 100	**3**
	P-Group: CONTROL	**Active:** Immediately	**QuickComm.:** No	**Max:** 2000	

Sets the minimum time when the changeover frequency is exceeded when changing from the open-loop controlled into the closed-loop controlled mode.

Index:
P1759[0] : 1st. Drive data set (DDS)
P1759[1] : 2nd. Drive data set (DDS)
P1759[2] : 3rd. Drive data set (DDS)

Dependency:
Refer to P1750, P1755, P1756

P1764[3]	**Kp of n-adaption (SLVC)**			**Min:** 0.0	Level
	CStat: CUT	**Datatype:** Float	**Unit:** -	**Def:** 0.2	**3**
	P-Group: CONTROL	**Active:** Immediately	**QuickComm.:** No	**Max:** 2.5	

Enters gain of speed adaptation controller for sensorless vector control.

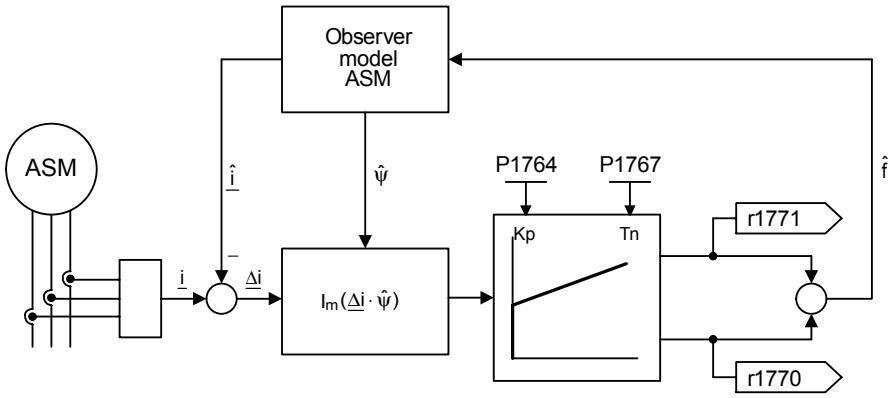

Index:

P1764[0] : 1st. Drive data set (DDS)
P1764[1] : 2nd. Drive data set (DDS)
P1764[2] : 3rd. Drive data set (DDS)

P1767[3]	**Tn of n-adaption (SLVC)**			**Min:** 1.0	Level
	CStat: CUT	**Datatype:** Float	**Unit:** ms	**Def:** 4.0	**4**
	P-Group: CONTROL	**Active:** Immediately	**QuickComm.:** No	**Max:** 200.0	

Enters speed adaptation controller integral time.

Index:

P1767[0] : 1st. Drive data set (DDS)
P1767[1] : 2nd. Drive data set (DDS)
P1767[2] : 3rd. Drive data set (DDS)

r1770	**CO: Prop. output of n-adaption**			**Min:** -	Level
		Datatype: Float	**Unit:** Hz	**Def:** -	**3**
	P-Group: CONTROL			**Max:** -	

Displays proportional part of speed adaptation controller.

r1771	**CO: Int. output of n-adaption**			**Min:** -	Level
		Datatype: Float	**Unit:** Hz	**Def:** -	**3**
	P-Group: CONTROL			**Max:** -	

Displays integral part of speed adaptation controller.

r1778	**CO: Flux angle difference**			**Min:** -	Level
		Datatype: Float	**Unit:** °	**Def:** -	**4**
	P-Group: CONTROL			**Max:** -	

Displays flux angle difference between motor model and current transformation before motor model is active.

P1780[3]	**Control word of Rs/Rr-adaption**			**Min:** 0	Level
	CStat: CUT	**Datatype:** U16	**Unit:** -	**Def:** 3	**3**
	P-Group: CONTROL	**Active:** first confirm	**QuickComm.:** No	**Max:** 3	

Enables thermal adaptation of stator and rotor resistance to reduce torque errors in speed/torque regulation with speed sensor, or frequency errors in speed/torque regulation without speed sensor.

Bitfields:

```
Bit00   Enable thermal  Rs/Rr-adapt.          0  NO        1  YES
Bit01   Enable observer Rs/Xm-adapt.          0  NO        1  YES
```

Index:

P1780[0] : 1st. Drive data set (DDS)
P1780[1] : 2nd. Drive data set (DDS)
P1780[2] : 3rd. Drive data set (DDS)

Note:

Only stator resistance adaptation is carried out for synchronous motors.

P1781[3]	**Tn of Rs-adaption**			**Min:** 10	Level
	CStat: CUT	**Datatype:** U16	**Unit:** ms	**Def:** 100	**4**
	P-Group: CONTROL	**Active:** Immediately	**QuickComm.:** No	**Max:** 2000	

Enters Rs-adaptation controller integral time.

Index:

P1781[0] : 1st. Drive data set (DDS)
P1781[1] : 2nd. Drive data set (DDS)
P1781[2] : 3rd. Drive data set (DDS)

r1782	**Output of Rs-adaptation**			**Min:** -	Level
		Datatype: Float	**Unit:** %	**Def:** -	**3**
	P-Group: CONTROL			**Max:** -	

Displays stator resistance adaptation from controller in [%] relative to rated motor resistance.

Stator resistance is obtained as a function of the motor temperature as:

a) $\vartheta_{act} \approx P0625$:

$$R_{s_{act}} = R_{s_{Start}} + R_{s_{adapt}} = Z_N \cdot \frac{r0370 - r1782}{100\%} \quad \text{with} \quad R_{s_{Start}} = R_s(P0625)$$

b) $\vartheta_{act} = r0633$:

$$R_{s_{act}} = R_s(r0633) + R_{s_{adapt}} = Z_N \cdot \frac{r0395 - r1782}{100\%}$$

Note:

Rated motor impedance:

$$Z_N = \frac{V_N}{\sqrt{3} \cdot I_N} = \frac{P0304}{\sqrt{3} \cdot P0305} \quad <=>100\%$$

P1786[3]	**Tn of Xm-adaption**			**Min:** 10	Level
	CStat: CUT	**Datatype:** U16	**Unit:** ms	**Def:** 100	**4**
	P-Group: CONTROL	**Active:** Immediately	**QuickComm.:** No	**Max:** 2000	

Enters Xm-adaptation controller integral time.

Index:

P1786[0] : 1st. Drive data set (DDS)
P1786[1] : 2nd. Drive data set (DDS)
P1786[2] : 3rd. Drive data set (DDS)

r1787	**Output of Xm-adaption**			**Min:** -	Level
		Datatype: Float	**Unit:** %	**Def:** -	**3**
	P-Group: CONTROL			**Max:** -	

Displays main reactance adaptation from controller in [%] relative to rated impedance.

For $f \le f_N$ is valid

$$X_{m\Gamma_{act}} = X_{m\Gamma_{Start}} + X_{m\Gamma_{adapt}} = Z_N \cdot \frac{r0382 - r1787}{100\%}$$

Note:

Rated motor impedance:

$$Z_N = \frac{V_N}{\sqrt{3} \cdot I_N} = \frac{P0304}{\sqrt{3} \cdot P0305} \quad <=>100\%$$

3.30 Inverter parameters (Modulator)

P1800	Pulse frequency				Min: 2	Level
	CStat: CUT	Datatype: U16	Unit: kHz		Def: 4	2
	P-Group: INVERTER	Active: Immediately	QuickComm.: No		Max: 16	

Sets pulse frequency of power switches in inverter. The frequency can be changed in steps of 2 kHz.

Dependency:

Minimum pulse frequency depends on P1082 (maximum frequency) and P0310 (rated motor frequency).
- see derating in P1082
- P1800 > 30 * P0310

Note:
- If the pulse frequency is increased, max. inverter current r0209 can be reduced (derating). The derating characteristic depends on the type and power of the inverter (see manuall OPERATING INSTRUCTION).
- If silent operation is not absolutely necessary, lower pulse frequencies may be selected to reduce inverter losses and radio-frequency emissions.
- Under certain circumstances, the inverter may reduce the switching frequency to provide protection against over-temperature (see P0290).

r1801	CO: Act. pulse frequency			Min: -	Level
		Datatype: U16	Unit: kHz	Def: -	3
	P-Group: INVERTER			Max: -	

Actual pulse frequency of power switches in inverter.

Notice:

Under certain conditions (inverter overtemperature, see P0290), this can differ from the values selected in P1800 (pulse frequency).

P1802	Modulator mode			Min: 0	Level
	CStat: CUT	Datatype: U16	Unit: -	Def: 0	3
	P-Group: INVERTER	Active: first confirm	QuickComm.: No	Max: 2	

Selects inverter modulator mode.

Possible Settings:

0 SVM/ASVM automatic mode
1 Asymmetric SVM
2 Space vector modulation

Notice:
- Asymmetric space vector modulation (ASVM) produces lower switching losses than space vector modulation (SVM), but may cause irregular rotation at very low frequencies.
- Space vector modulation (SVM) with over-modulation may produce current waveform distortion at high output voltages.
- Space vector modulation (SVM) without over-modulation will reduce maximum output voltage available to motor.

P1803[3]	Max. modulation			Min: 20.0	Level
	CStat: CUT	Datatype: Float	Unit: %	Def: 106.0	4
	P-Group: INVERTER	Active: Immediately	QuickComm.: No	Max: 150.0	

Sets maximum modulation index.

Index:

P1803[0] : 1st. Drive data set (DDS)
P1803[1] : 2nd. Drive data set (DDS)
P1803[2] : 3rd. Drive data set (DDS)

Note:
- P1803 = 100 % : Limit for over-control (for ideal inverter without switching delay).
- For vector control the modulation limit will be reduced automatically with 4 %.

P1820[3]	Reverse output phase sequence			Min: 0	Level
	CStat: CT	Datatype: U16	Unit: -	Def: 0	2
	P-Group: INVERTER	Active: first confirm	QuickComm.: No	Max: 1	

Changes direction of motor rotation without changing setpoint polarity.

Possible Settings:

0 OFF
1 ON

Index:

P1820[0] : 1st. Drive data set (DDS)
P1820[1] : 2nd. Drive data set (DDS)
P1820[2] : 3rd. Drive data set (DDS)

Dependency:

If positive and negative revolution is enabled, frequency setpoint is directly used.
If both positive and negative revolution are disabled, reference value is set to zero.

Details:

See P1000 (select frequency setpoint)

P1825	On-state voltage of IGBT			Min: 0.0	Level
	CStat: CUT	Datatype: Float	Unit: V	Def: 1.4	4
	P-Group: INVERTER	Active: Immediately	QuickComm.: No	Max: 20.0	

Corrects on-state voltage of the IGBTs.

P1828	Gating unit dead time			Min: 0.00	Level
	CStat: CUT	Datatype: Float	Unit: us	Def: 0.50	4
	P-Group: INVERTER	Active: first confirm	QuickComm.: No	Max: 3.50	

Sets compensation time of gating unit interlock.

3.31 Motor data identification

P1909[3]	Ctrl. word of motor data ident.			Min: 0	Level
	CStat: CUT	Datatype: U16	Unit: -	Def: 1	4
	P-Group: CONTROL	Active: first confirm	QuickComm.: No	Max: 1	

Control word of motor data identification.

Bitfields:

```
Bit00   Estimation of Xs                          0  NO          1  YES
```

Index:

P1909[0] : 1st. Drive data set (DDS)
P1909[1] : 2nd. Drive data set (DDS)
P1909[2] : 3rd. Drive data set (DDS)

P1910	Select motor data identification			Min: 0	Level
	CStat: CT	Datatype: U16	Unit: -	Def: 0	2
	P-Group: MOTOR	Active: first confirm	QuickComm.: Yes	Max: 20	

Performs a motor data identification.

Possible Settings:

0 Disabled
1 Identification of all parameters with parameter change
2 Identification of all parameters without parameter change
3 Identification of saturation curve with parameter change
4 Identification of saturation curve without parameter change
5 Identification of XsigDyn (r1920) without parameter change
6 Identification of Tdead (r1926) without parameter change
7 Identification of Rs (r1912) without parameter change
8 Identification of Xs (r1915) without parameter change
9 Identification of Tr (r1913) without parameter change
10 Identification of Xsigma (r1914) without parameter change
20 Set voltage vector

Common Settings:

P1910 = 1:

All motor data and inverter characteristic will be identified and parameter will be changed.

- P0350 stator resistance,
- P0354 rotor resistance,
- P0356 stator leakage inductance,
- P0358 rotor leakage inductance,
- P0360 main inductance
- P1825 on-state voltage of IGBTs
- P1828 compensation time of gating unit interlock

P1910 = 3:

Saturation curve will be identified and parameter will be changed.

- P0362 ... P0365 magnetizing curve flux 1 .. 4
- P0366 ... P0369 magnetizing curve imag 1 .. 4

Caution:

Motor identification should normally be performed on a cold motor. However, the identification of the motor data should only be performed if the motor temperature is within 5°C of the measured ambient temperature stored in P0625. If the motor identification is not within the 5ºC limit then the correct functioning of Vector Control (VC, SLVC) cannot be guaranteed. This may cause instabilities when using vector control.

The motor rating plate information with respect to the connection of the motor windings (Star or delta connection) must be correct in order to establish the correct equivalent circuit data. The motor identification calculates this data based on a Phase of a Star equivalent circuit P0350 - P0360, irrespective of whether the motor is connected star or delta. This must be considered when the motor data is input directly.

Note:

- In order to that the motor identification routine supplies the correct data, before selecting, fast commissioning should be carried-out.
- If the motor data identification routine is activated (e.g. P1910 = 1), then at the next ON command, the measuring operation is started and alarm A0541 is generated. After the measurement is completed, both P1910 and the alarm are reset.

Notice:

When choosing the setting for measurement, observe the following:

1. "with parameter change"
   means that the values are actually adopted as Pxxxx parameter settings (see common settings above) and applied to the controller as well as being shown in the read-only parameters below.

2. "without parameter change"
   means that the values are only displayed, i.e. shown for checking purposes in the read-only parameters r1912 (identified stator resistance), r1913 (identified rotor time constant), r1914 (ident. total leakage reactance), r1915/r1916/r1917/r1918/r1919 (identified nominal stator reactance/identified stator reactance 1 to 4), r1925 (IGBT on-state voltage) and r1926 (identified gating unit dead time). The values are not applied to the controller.

P1911 No. of phase to be identified

CStat: CT	**Datatype:** U16	**Unit:** -	**Min:** 1	Level
P-Group: INVERTER	**Active:** Immediately	**QuickComm.:** No	**Def:** 3	**2**
			Max: 3	

Selects maximum number of motor phases to be identified.

r1912[3] Identified stator resistance

	Datatype: Float	**Unit:** Ohm	**Min:** -	Level
P-Group: MOTOR			**Def:** -	**2**
			Max: -	

Displays measured stator resistance value (line-to-line) in [Ohms]

Index:

r1912[0] : U_phase
r1912[1] : V_phase
r1912[2] : W_phase

Note:

This value is measured using P1910 = 1 or 2 , i.e., identification of all parameters with/without change.

r1913[3] Identified rotor time constant

	Datatype: Float	**Unit:** ms	**Min:** -	Level
P-Group: MOTOR			**Def:** -	**2**
			Max: -	

Displays identified rotor time constant.

Index:

r1913[0] : U_phase
r1913[1] : V_phase
r1913[2] : W_phase

r1914[3] Ident. total leakage inductance

	Datatype: Float	**Unit:** -	**Min:** -	Level
P-Group: MOTOR			**Def:** -	**2**
			Max: -	

Displays identified total leakage inductance.

Index:

r1914[0] : U_phase
r1914[1] : V_phase
r1914[2] : W_phase

r1915[3] Ident. nom. stator inductance

	Datatype: Float	**Unit:** -	**Min:** -	Level
P-Group: MOTOR			**Def:** -	**2**
			Max: -	

Displays identified stator inductance.

Index:

r1915[0] : U_phase
r1915[1] : V_phase
r1915[2] : W_phase

Notice:

If the value identified (Ls = stator inductance) does not lie within the range 50 % < Xs [p. u.] < 500 % fault message 41 (motor data identification failure) is issued.

r0949 provides further information (fault value = 4 in this case).

r1916[3] Identified stator inductance 1

	Datatype: Float	**Unit:** -	**Min:** -	Level
P-Group: MOTOR			**Def:** -	**2**
			Max: -	

Displays identified stator inductance.

Index:

r1916[0] : U_phase
r1916[1] : V_phase
r1916[2] : W_phase

Details:

See P1915 (identified nominal stator inductance).

r1917[3]	**Identified stator inductance 2**			**Min:** -	Level
		Datatype: Float	**Unit:** -	**Def:** -	**2**
	P-Group: MOTOR			**Max:** -	

Displays identified stator inductance.

Index:

r1917[0] : U_phase
r1917[1] : V_phase
r1917[2] : W_phase

Details:

See P1915 (identified nominal stator inductance)

r1918[3]	**Identified stator inductance 3**			**Min:** -	Level
		Datatype: Float	**Unit:** -	**Def:** -	**2**
	P-Group: MOTOR			**Max:** -	

Displays identified stator inductance.

Index:

r1918[0] : U_phase
r1918[1] : V_phase
r1918[2] : W_phase

Details:

See P1915 (identified nominal stator reactance)

r1919[3]	**Identified stator inductance 4**			**Min:** -	Level
		Datatype: Float	**Unit:** -	**Def:** -	**2**
	P-Group: MOTOR			**Max:** -	

Displays identified stator inductance.

Index:

r1919[0] : U_phase
r1919[1] : V_phase
r1919[2] : W_phase

Details:

See P1915 (identified nominal stator inductance)

r1920[3]	**Identified dyn. leak. inductance**			**Min:** -	Level
		Datatype: Float	**Unit:** -	**Def:** -	**2**
	P-Group: MOTOR			**Max:** -	

Displays identified total dynamic leakage inductance.

Index:

r1920[0] : U_phase
r1920[1] : V_phase
r1920[2] : W_phase

r1925	**Identified on-state voltage**			**Min:** -	Level
		Datatype: Float	**Unit:** V	**Def:** -	**2**
	P-Group: INVERTER			**Max:** -	

Displays identified on-state voltage of IGBT.

r1926	**Ident. gating unit dead time**			**Min:** -	Level
		Datatype: Float	**Unit:** us	**Def:** -	**2**
	P-Group: INVERTER			**Max:** -	

Displays identified dead time of gating unit interlock.

P1930	**Voltage setpoint for calibration**			**Min:** 0	Level
	CStat: CUT	**Datatype:** Float	**Unit:** V	**Def:** 0	**4**
	P-Group: INVERTER	**Active:** Immediately	**QuickComm.:** No	**Max:** 1000	

Specifies reference voltage for generation of a test voltage vector (e.g. used for shunt calibration).

P1931	**Phase**			**Min:** 1	Level
	CStat: CUT	**Datatype:** U16	**Unit:** -	**Def:** 1	**4**
	P-Group: INVERTER	**Active:** Immediately	**QuickComm.:** No	**Max:** 6	

Defines phase of voltage vector

3.32 Speed optimization

P1960	**Speed control optimisation**			**Min:** 0	Level
	CStat: CT	**Datatype:** U16	**Unit:** -	**Def:** 0	**3**
	P-Group: MOTOR	**Active:** first confirm	**QuickComm.:** No	**Max:** 1	

The drive should be set into a vector mode (P1300 = 20 or 21) to carry out speed controller optimisation. When speed controller optimisation is enabled (P1960 = 1) the warning A0542 will become active.

When the drive is next started it will do the optimisation tests. The drive will accelerate the motor to 20 % of P0310 (rated motor frequency) using the ramp up time P1120 and then under torque control go to 50 % of P0310 (rated motor frequency). The drive will then ramp back down to 20 % using the ramp down time P1121. This procedure is repeated several times and then average time taken. From this an estimation of the inertia of the load on the motor can be derived. From this the inertia ratio parameter (P0342) and the Kp gains for VC (P1460) and SLVC (P1470) are modified to give a response suitable for the measured inertia.

Possible Settings:

0 Disabled
1 Enabled

Note:

- When the test is complete P1960 will be cleared to zero.
- If there is a problem due to instability the drive may trip with an F0042 fault if a stable value has not been obtained on the ramp up within a reasonable time.
- It should be noted that the DC-link controller should be enabled whilst doing the test as otherwise overvoltage trips maybe experienced. This will however depend on the ramp down time and the system inertia.
- The speed loop optimisation may not be suitable for some applications due to the nature of the test i.e. accelerating under torque control from 20 % to 50 %.

3.33 Reference parameters

P2000[3]	**Reference frequency**			**Min:** 1.00	Level
	CStat: CT	**Datatype:** Float	**Unit:** Hz	**Def:** 50.00	**2**
	P-Group: COMM	**Active:** first confirm	**QuickComm.:** No	**Max:** 650.00	

Parameter P2000 represents the reference frequency for frequency values which are displayed/transferred as a percentage or a hexadecimal value. Where:

- hexadecimal 4000 H ==> P2000 (e.g.: USS-PZD)
- percentage 100 % ==> P2000 (e.g.: ADC)

Index:

P2000[0] : 1st. Drive data set (DDS)
P2000[1] : 2nd. Drive data set (DDS)
P2000[2] : 3rd. Drive data set (DDS)

Example:

If a BICO connection is made between two parameters or alternatively using P0719 or P1000, the "unit" of the parameters (standardized (Hex) or physical (i.e. Hz) values) may differ. MICROMASTER implicitly makes an automatic conversion to the target value.

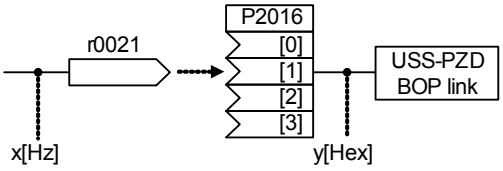

$$y[Hex] = \frac{r0021[Hz]}{P2000[Hz]} \cdot 4000[Hex]$$

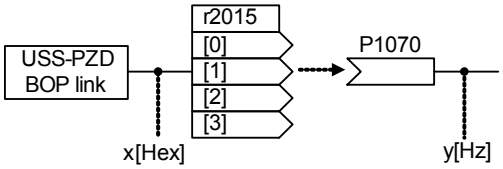

$$y[Hz] = \frac{r2015[1]}{4000[Hex]} \cdot P2000$$

Caution:

Parameter P2000 represents the reference frequency of the above mentioned interfaces. A maximum frequency setpoint of 2*P2000 can be applied via the corresponding interface. Unlike parameter P1082 (Max. Frequency) this limits the inverter frequency internally independent of the reference frequency. By modification of P2000 it will also adapt the parameter to the new settings.

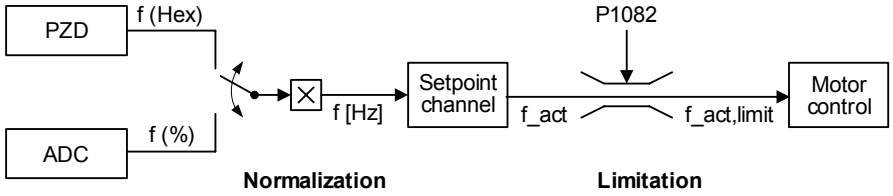

$$f[Hz] = \frac{f(Hex)}{4000(Hex)} \cdot P2000 = \frac{f(\%)}{100\%} \cdot P2000 \qquad f\_act,limit = \min(P1082, f\_act)$$

Notice:

Reference variables are intended as an aid to presenting setpoint and actual value signals in a uniform manner. This also applies to fixed settings entered as a precentage. A value of 100 % (USS / CB) corresponds to a process data value of 4000H, or 4000 0000H in the case of double values.

In this respect, the following parameters are available:

P2000	Reference frequency	Hz
P2001	Reference voltage	V
P2002	Reference current	A
P2003	Reference torque	Nm
P2004	Reference power	kW hp — f(P0100)

P2001[3] Reference voltage

CStat:	CT	**Datatype:** U16	**Unit:** V	**Min:**	10	Level
P-Group:	COMM	**Active:** first confirm	**QuickComm.:** No	**Def:**	1000	**3**
				Max:	2000	

Full-scale output voltage (i.e. 100 %) used over serial link (corresponds to 4000H).

Index:

P2001[0] : 1st. Drive data set (DDS)
P2001[1] : 2nd. Drive data set (DDS)
P2001[2] : 3rd. Drive data set (DDS)

Example:

P2001 = 230 specifies that 4000H received via USS denotes 230 V.

If a BICO connection is made between two parameters, the "unit" of the parameters (standardized (Hex) or physical (i.e. V) values) may differ. MICROMASTER implicitly makes an automatic conversion to the target value.

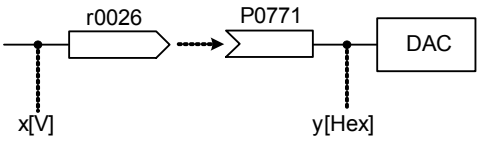

$$y[Hex] = \frac{r0026[V]}{P2001[V]} \cdot 4000[Hex]$$

P2002[3]	**Reference current**			**Min:** 0.10	Level
	CStat: CT	**Datatype:** Float	**Unit:** A	**Def:** 0.10	**3**
	P-Group: COMM	**Active:** first confirm	**QuickComm.:** No	**Max:** 10000.00	

Full-scale output current used over serial link (corresponds to 4000H).

Index:

P2002[0] : 1st. Drive data set (DDS)
P2002[1] : 2nd. Drive data set (DDS)
P2002[2] : 3rd. Drive data set (DDS)

Example:

If a BICO connection is made between two parameters, the "unit" of the parameters (standardized (Hex) or physical (i.e. A) values) may differ. MICROMASTER implicitly makes an automatic conversion to the target value.

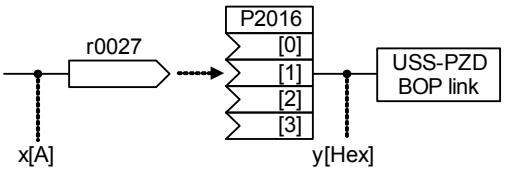

$$y[Hex] = \frac{r0027[A]}{P2002[A]} \cdot 4000[Hex]$$

P2003[3]	**Reference torque**			**Min:** 0.10	Level
	CStat: CT	**Datatype:** Float	**Unit:** Nm	**Def:** 0.12	**3**
	P-Group: COMM	**Active:** first confirm	**QuickComm.:** No	**Max:** 99999.00	

Full-scale reference torque used over the serial link (corresponds to 4000H).

Index:

P2003[0] : 1st. Drive data set (DDS)
P2003[1] : 2nd. Drive data set (DDS)
P2003[2] : 3rd. Drive data set (DDS)

Example:

If a BICO connection is made between two parameters or alternatively using P1500, the "unit" of the parameters (standardized (Hex) or physical (i.e. Nm) values) may differ. MICROMASTER implicitly makes an automatic conversion to the target value.

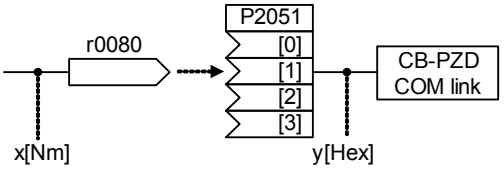

$$y[Hex] = \frac{r0080[Nm]}{P2003[Nm]} \cdot 4000[Hex]$$

P2004[3]	**Reference power**			**Min:** 0	Level
	CStat: CT	**Datatype:** Float	**Unit:** -	**Def:**	**3**
	P-Group: COMM	**Active:** first confirm	**QuickComm.:** No	**Max:** 0	

Full-scale reference power used over the serial link (corresponds to 4000H).

$$r2004 = \frac{1}{2} \cdot 2 \cdot \pi \cdot f \cdot M = \pi \cdot P2000 \cdot P2003$$

Index:

P2004[0] : 1st. Drive data set (DDS)
P2004[1] : 2nd. Drive data set (DDS)
P2004[2] : 3rd. Drive data set (DDS)

Example:

If a BICO connection is made between two parameters, the "unit" of the parameters (standardized (Hex) or physical (i.e. kW / hp) values) may differ. MICROMASTER implicitly makes an automatic conversion to the target value.

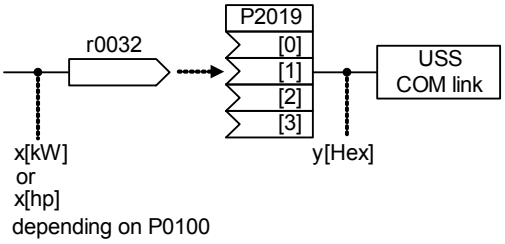

$$y[Hex] = \frac{r0032}{r2004} \cdot 4000[Hex]$$

3.34 Communication parameters (USS, CB)

P2009[2]	USS denormalization				Min: 0	Level
	CStat: CT	Datatype: U16	Unit: -		Def: 0	3
	P-Group: COMM	Active: first confirm	QuickComm.: No		Max: 1	

Enables denormalization for USS.

Possible Settings:

0 Disabled
1 Enabled

Index:

P2009[0] : Serial interface COM link
P2009[1] : Serial interface BOP link

Note:

If denormalization is enabled, the main setpoint (word 2 in PZD) is not interpreted as 100 % = 4000H, but as "absolute" instead (e.g. 4000H = 16384 means 163.84 Hz) if this is a frequency. Denormalization (P2009 = 1) only works for frequencies and is intended for backwards compatibility with MM3.

P2010[2]	USS baudrate				Min: 4	Level
	CStat: CUT	Datatype: U16	Unit: -		Def: 6	2
	P-Group: COMM	Active: first confirm	QuickComm.: No		Max: 12	

Sets baud rate for USS communication.

Possible Settings:

4 2400 baud
5 4800 baud
6 9600 baud
7 19200 baud
8 38400 baud
9 57600 baud
10 76800 baud
11 93750 baud
12 115200 baud

Index:

P2010[0] : Serial interface COM link
P2010[1] : Serial interface BOP link

P2011[2]	USS address				Min: 0	Level
	CStat: CUT	Datatype: U16	Unit: -		Def: 0	2
	P-Group: COMM	Active: first confirm	QuickComm.: No		Max: 31	

Sets unique address for inverter.

Index:

P2011[0] : Serial interface COM link
P2011[1] : Serial interface BOP link

Note:

You can connect up to a further 30 inverters via the serial link (i.e. 31 inverters in total) and control them with the USS serial bus protocol.

P2012[2]	**USS PZD length**			**Min:** 0	Level
	CStat: CUT	**Datatype:** U16	**Unit:** -	**Def:** 2	**3**
	P-Group: COMM	**Active:** first confirm	**QuickComm.:** No	**Max:** 8	

Defines the number of 16-bit words in PZD part of USS telegram.

Index:

P2012[0] : Serial interface COM link
P2012[1] : Serial interface BOP link

Notice:

USS protocol consists of PZD and PKW which can be changed by the user via parameters P2012 and P2013 respectively.

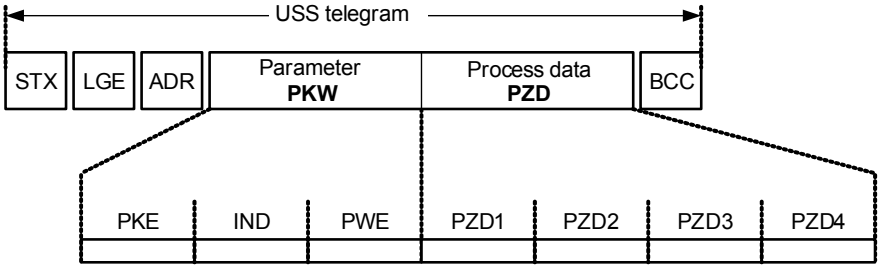

STX	Start of text	PKE	Parameter ID
LGE	Length	IND	Sub-index
ADR	Address	PWE	Parameter value
PKW	Parameter ID value		
PZD	Process data		
BCC	Block check character		

PZD transmits a control word and setpoint or status word and actual values. The number of PZD-words in a USS-telegram are determined by parameter P2012, where the first two words (P2012 >= 2) are either:

- control word and main setpoint or
- status word and actual value.

Restrictions:

- If the above serial interface controls the inverter (P0700 or P0719) then the 1st control word must be transferred in the 1st PZD-word.
- If the setpoint source is selected via P1000 or P0719, then the main setpoint must be transfered in the 2nd PZD-word,
- When P2012 is greater than or equal to 4 the additional control word (2nd control word) must transferred in the 4th PZD-word, if the serial interface controls the inverter (P0700 or P0719).

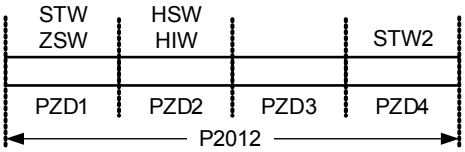

STW	Control word	HSW	Main setpoint
ZSW	Status word	HIW	Main actual value
PZD	Process data		

P2013[2]	USS PKW length				Min: 0	Level
	CStat: CUT	Datatype: U16	Unit: -		Def: 127	3
	P-Group: COMM	Active: first confirm	QuickComm.: No		Max: 127	

Defines the number of 16-bit words in PKW part of USS telegram.

The PKW part consists of the PKE part (1. word), IND part (2. word) resp. PWE part (3. - n. word). In contrary to the IND and PKE part, the PWE part can be varied. Depending on the particular requirement, 3-word, 4-word or variable word lengths can be parameterized. The PKW part of the USS telegram is used to read and write individual parameter values.

Possible Settings:

0 No words
3 3 words
4 4 words
127 Variable

Index:

P2013[0] : Serial interface COM link
P2013[1] : Serial interface BOP link

Example:

	Data type		
	U16 (16 Bit)	U32 (32 Bit)	Float (32 Bit)
P2013 = 3	X	Parameter access fault	Parameter access fault
P2013 = 4	X	X	X
P2013 = 127	X	X	X

Notice:

USS protocol consists of PZD and PKW which can be changed by the user via parameters P2012 and P2013 respectively. Parameter P2013 determines the number of PKW-words in a USS-telegram.

Setting P2013 to 3 or 4 determines the length of the PKW (3 = three words and 4 = four words). When P2013 set to 127 automatically adjusts the length of the PKW words are required.

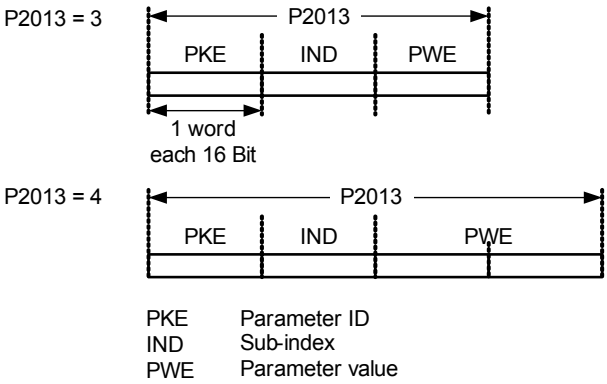

PKE Parameter ID
IND Sub-index
PWE Parameter value

If a fixed PKW length is selected only one parameter value can be transferred. In the case of indexed parameter, you must use the variable PKW length if you wish to have the values of all indices transferred in a single telegram. In selecting the fixed PKW length, it is important to ensure the value in question can be transferred using this PKW length.

P2013 = 3, fixes PKW length, but does not allow access to many parameter values. A parameter fault is generated when an out-of-range value is used, the value will not be accepted but the inverter state will not be affected. Useful for applications where parameters are not changed, but MM3s are also used. Broadcast mode is not possible with this setting.

P2013 = 4, fixes PKW length. Allows access to all parameters, but indexed parameters can only be read one index at a time. Word order for single word values are different to setting 3 or 127, see example below.

P2013 = 127, most useful setting. PKW reply length varies depending on the amount of information needed. Can read fault information and all indices of a parameter with a single telegram with this setting.

Example:
Set P0700 to value 5 (0700 = 2BC (hex))

	P2013 = 3	P2013 = 4	P2013 = 127
Master → MM4	22BC 0000 0005	22BC 0000 0000 0005	22BC 0000 0005 0000
MM4 → Master	12BC 0000 0005	12BC 0000 0000 0005	12BC 0000 0005

P2014[2]	**USS telegram off time**			**Min:** 0	Level
	CStat: CT	**Datatype:** U16	**Unit:** ms	**Def:** 0	**3**
	P-Group: COMM	**Active:** Immediately	**QuickComm.:** No	**Max:** 65535	

Defines the telegram failure time for the serial interfaces with USS protocol.

The telegram failure time defines the time within which a valid telegram must have been received. If a valid telegram is not received within the specified time, the drive inverter outputs fault F0070.

Index:

P2014[0] : Serial interface COM link
P2014[1] : Serial interface BOP link

Notice:

By default (time set to 0), no fault is generated (i.e. watchdog disabled).

r2015[8]	**CO: PZD from BOP link (USS)**			**Min:** -	Level
		Datatype: U16	**Unit:** -	**Def:** -	**3**
	P-Group: COMM			**Max:** -	

Displays process data received via USS on BOP link (RS232 USS).

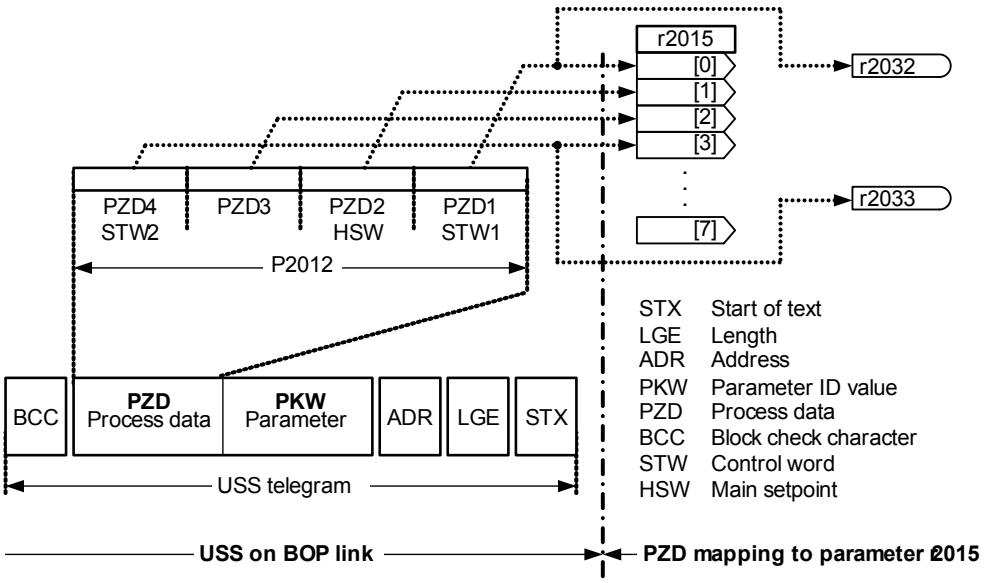

Index:

r2015[0] : Received word 0
r2015[1] : Received word 1
r2015[2] : Received word 2
r2015[3] : Received word 3
r2015[4] : Received word 4
r2015[5] : Received word 5
r2015[6] : Received word 6
r2015[7] : Received word 7

Note:

The control words can be viewed as bit parameters r2032 and r2033.

Restrictions:

- If the above serial interface controls the inverter (P0700 or P0719) then the 1st control word must be transferred in the 1st PZD-word.
- If the setpoint source is selected via P1000 or P0719, then the main setpoint must be transfered in the 2nd PZD-word,
- When P2012 is greater than or equal to 4 the additional control word (2nd control word) must transferred in the 4th PZD-word, if the above serial interface controls the inverter (P0700 or P0719).

P2016[8]	**CI: PZD to BOP link (USS)**			**Min:** 0:0	Level
	CStat: CT	**Datatype:** U32	**Unit:** -	**Def:** 52:0	**3**
	P-Group: COMM	**Active:** Immediately	**QuickComm.:** No	**Max:** 4000:0	

Selects signals (process data PZD) to be transmitted to serial interface via USS on BOP link

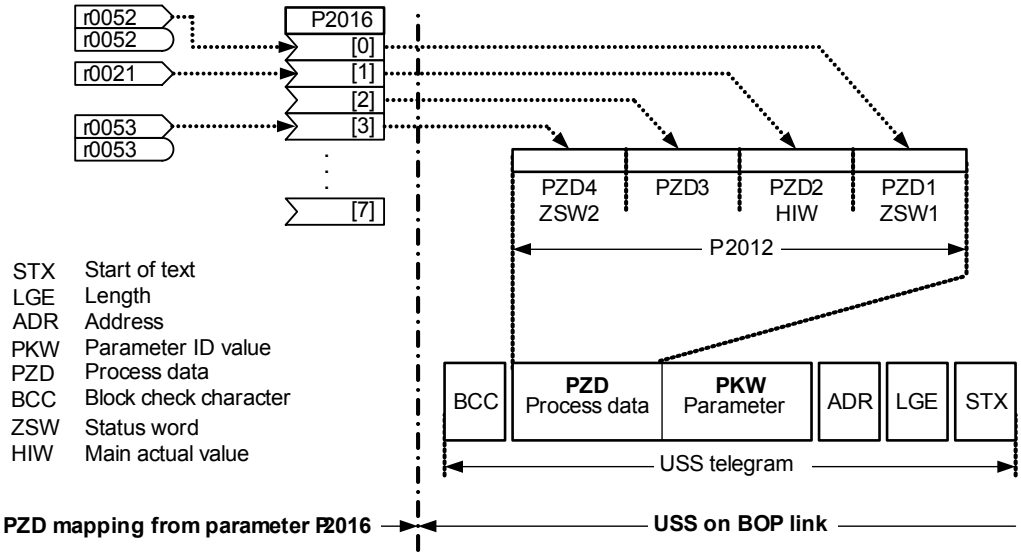

Index:

P2016[0] : Transmitted word 0
P2016[1] : Transmitted word 1
P2016[2] : Transmitted word 2
P2016[3] : Transmitted word 3
P2016[4] : Transmitted word 4
P2016[5] : Transmitted word 5
P2016[6] : Transmitted word 6
P2016[7] : Transmitted word 7

Example:

P2016[0] = 52.0 (default). In this case, the value of r0052[0] (CO/BO: Status word) is transmitted as 1st PZD to the BOP link.

Note:

If r0052 not indexed, display does not show an index (".0").

r2018[8]	**CO: PZD from COM link (USS)**			**Min:** -	Level
		Datatype: U16	**Unit:** -	**Def:** -	**3**
	P-Group: COMM			**Max:** -	

Displays process data received via USS on COM link.

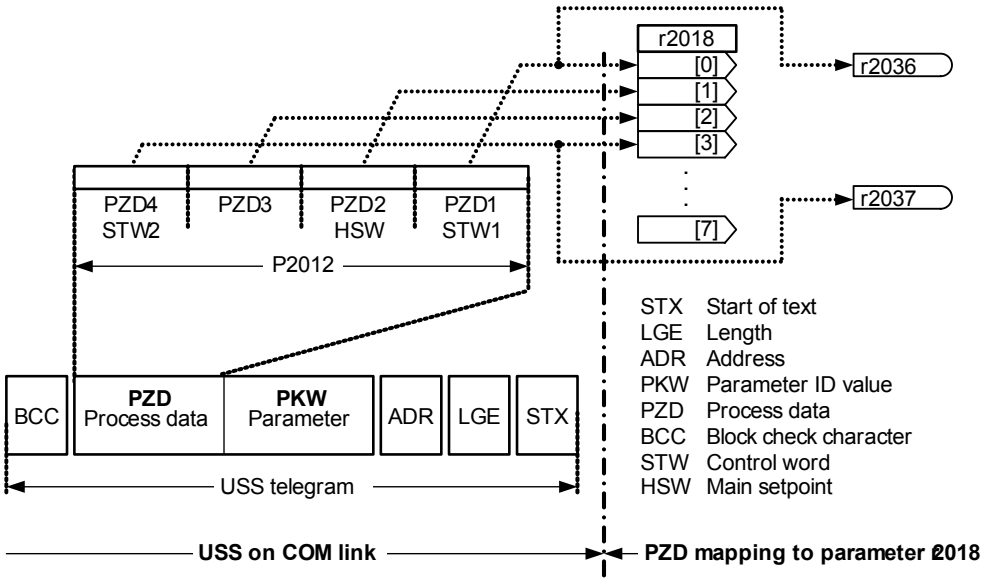

Index:

r2018[0] : Received word 0
r2018[1] : Received word 1
r2018[2] : Received word 2
r2018[3] : Received word 3
r2018[4] : Received word 4
r2018[5] : Received word 5
r2018[6] : Received word 6
r2018[7] : Received word 7

Note:

The control words can be viewed as bit parameters r2036 and r2037.

Restrictions:

- If the above serial interface controls the inverter (P0700 or P0719) then the 1st control word must be transferred in the 1st PZD-word.
- If the setpoint source is selected via P1000 or P0719, then the main setpoint must be transfered in the 2nd PZD-word,
- When P2012 is greater than or equal to 4 the additional control word (2nd control word) must transferred in the 4th PZD-word, if the above serial interface controls the inverter (P0700 or P0719).

P2019[8]	CI: PZD to COM link (USS)			Min: 0:0	Level
	CStat: CT	Datatype: U32	Unit: -	Def: 52:0	3
	P-Group: COMM	Active: Immediately	QuickComm.: No	Max: 4000:0	

Selects signals (process data PZD) to be transmitted to serial interface via USS on COM link

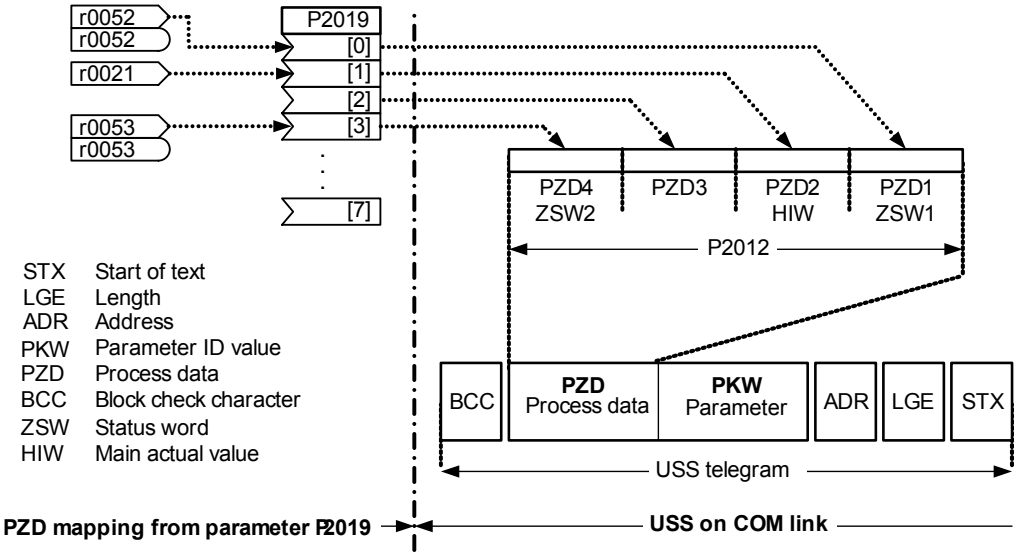

Index:

P2019[0] : Transmitted word 0
P2019[1] : Transmitted word 1
P2019[2] : Transmitted word 2
P2019[3] : Transmitted word 3
P2019[4] : Transmitted word 4
P2019[5] : Transmitted word 5
P2019[6] : Transmitted word 6
P2019[7] : Transmitted word 7

Details:

See P2016 (PZD to BOP link)

r2024[2]	USS error-free telegrams			Min: -	Level
		Datatype: U16	Unit: -	Def: -	3
	P-Group: COMM			Max: -	

Displays number of error-free USS telegrams received.

Index:

r2024[0] : Serial interface COM link
r2024[1] : Serial interface BOP link

r2025[2]	USS rejected telegrams			Min: -	Level
		Datatype: U16	Unit: -	Def: -	3
	P-Group: COMM			Max: -	

Displays the number of rejected USS telegrams. The sum of all USS errors (r2026 - r2031) is displayed in parameter r2025.

The following monitoring mechanisms have been implemented

- when a telegram is received, then initially, the correct start of a telegram (start interval + STX) must be identified and then the length must be evaluated (LGE). If the length does not correspond to the selected value for a fixed telegram or it does not have a valid value for a variable telegram length, the telegram is rejected.
- the appropriate times are monitored before and while receiving telegrams.
- the block check character (BCC) is generated while the telegram is received and after the complete telegram has been read-in, this is compared with the received BCC. If these do not match, then the telegram is not evaluated.
- if a character frame error or a parity error has not occurred in any of the received characters, then the node number (ADR) of the received telegram can be evaluated.
- the telegram is rejected if the address byte (ADR) does not correspond to the node number (for slave) or the expected slave node number (for the master).

Index:

r2025[0] : Serial interface COM link
r2025[1] : Serial interface BOP link

r2026[2]	USS character frame error	Datatype: U16	Unit: -	Min: -	Def: -	Max: -	Level 3
	P-Group: COMM						

Displays number of USS character frame errors.

Index:

r2026[0] : Serial interface COM link
r2026[1] : Serial interface BOP link

r2027[2]	USS overrun error	Datatype: U16	Unit: -	Min: -	Def: -	Max: -	Level 3
	P-Group: COMM						

Displays number of USS telegrams with overrun error.

Index:

r2027[0] : Serial interface COM link
r2027[1] : Serial interface BOP link

r2028[2]	USS parity error	Datatype: U16	Unit: -	Min: -	Def: -	Max: -	Level 3
	P-Group: COMM						

Displays number of USS telegrams with parity error.

Index:

r2028[0] : Serial interface COM link
r2028[1] : Serial interface BOP link

r2029[2]	USS start not identified	Datatype: U16	Unit: -	Min: -	Def: -	Max: -	Level 3
	P-Group: COMM						

Displays number of USS telegrams with unidentified start.

Index:

r2029[0] : Serial interface COM link
r2029[1] : Serial interface BOP link

r2030[2]	USS BCC error	Datatype: U16	Unit: -	Min: -	Def: -	Max: -	Level 3
	P-Group: COMM						

Displays number of USS telegrams with BCC error.

Index:

r2030[0] : Serial interface COM link
r2030[1] : Serial interface BOP link

r2031[2]	USS length error	Datatype: U16	Unit: -	Min: -	Def: -	Max: -	Level 3
	P-Group: COMM						

Displays number of USS telegrams with incorrect length.

Index:

r2031[0] : Serial interface COM link
r2031[1] : Serial interface BOP link

r2032	BO: CtrlWrd1 from BOP link (USS)	Datatype: U16	Unit: -	Min: -	Def: -	Max: -	Level 3
	P-Group: COMM						

Displays control word 1 from BOP link (word 1 within USS).

Bitfields:

Bit00	ON/OFF1	0	NO	1	YES
Bit01	OFF2: Electrical stop	0	YES	1	NO
Bit02	OFF3: Fast stop	0	YES	1	NO
Bit03	Pulses enabled	0	NO	1	YES
Bit04	RFG enable	0	NO	1	YES
Bit05	RFG start	0	NO	1	YES
Bit06	Setpoint enable	0	NO	1	YES
Bit07	Fault acknowledge	0	NO	1	YES
Bit08	JOG right	0	NO	1	YES
Bit09	JOG left	0	NO	1	YES
Bit10	Control from PLC	0	NO	1	YES
Bit11	Reverse (setpoint inversion)	0	NO	1	YES
Bit13	Motor potentiometer MOP up	0	NO	1	YES
Bit14	Motor potentiometer MOP down	0	NO	1	YES
Bit15	CDS Bit 0 (Local/Remote)	0	NO	1	YES

r2033	BO: CtrlWrd2 from BOP link (USS)	Min: -	Level
	Datatype: U16 Unit: -	Def: -	3
	P-Group: COMM	Max: -	

Displays control word 2 from BOP link (i.e. word 4 within USS).

Bitfields:

Bit00	Fixed frequency Bit 0	0	NO	1	YES
Bit01	Fixed frequency Bit 1	0	NO	1	YES
Bit02	Fixed frequency Bit 2	0	NO	1	YES
Bit03	Fixed frequency Bit 3	0	NO	1	YES
Bit04	Drive data set (DDS) Bit 0	0	NO	1	YES
Bit05	Drive data set (DDS) Bit 1	0	NO	1	YES
Bit08	PID enabled	0	NO	1	YES
Bit09	DC brake enabled	0	NO	1	YES
Bit11	Droop enabled	0	NO	1	YES
Bit12	Torque control	0	NO	1	YES
Bit13	External fault 1	0	YES	1	NO
Bit15	Command data set (CDS) Bit 1	0	NO	1	YES

Dependency:

P0700 = 4 (USS on BOP link) and P0719 = 0 (Cmd / Setpoint = BICO parameter).

r2036	BO: CtrlWrd1 from COM link (USS)	Min: -	Level
	Datatype: U16 Unit: -	Def: -	3
	P-Group: COMM	Max: -	

Displays control word 1 from COM link (i.e. word 1 within USS).

Bitfields:

Bit00	ON/OFF1	0	NO	1	YES
Bit01	OFF2: Electrical stop	0	YES	1	NO
Bit02	OFF3: Fast stop	0	YES	1	NO
Bit03	Pulses enabled	0	NO	1	YES
Bit04	RFG enable	0	NO	1	YES
Bit05	RFG start	0	NO	1	YES
Bit06	Setpoint enable	0	NO	1	YES
Bit07	Fault acknowledge	0	NO	1	YES
Bit08	JOG right	0	NO	1	YES
Bit09	JOG left	0	NO	1	YES
Bit10	Control from PLC	0	NO	1	YES
Bit11	Reverse (setpoint inversion)	0	NO	1	YES
Bit13	Motor potentiometer MOP up	0	NO	1	YES
Bit14	Motor potentiometer MOP down	0	NO	1	YES
Bit15	CDS Bit 0 (Local/Remote)	0	NO	1	YES

Details:

See r2033 (control word 2 from BOP link).

r2037	BO: CtrlWrd2 from COM link (USS)	Min: -	Level
	Datatype: U16 Unit: -	Def: -	3
	P-Group: COMM	Max: -	

Displays control word 2 from COM link (i.e. word 4 within USS).

Bitfields:

Bit00	Fixed frequency Bit 0	0	NO	1	YES
Bit01	Fixed frequency Bit 1	0	NO	1	YES
Bit02	Fixed frequency Bit 2	0	NO	1	YES
Bit03	Fixed frequency Bit 3	0	NO	1	YES
Bit04	Drive data set (DDS) Bit 0	0	NO	1	YES
Bit05	Drive data set (DDS) Bit 1	0	NO	1	YES
Bit08	PID enabled	0	NO	1	YES
Bit09	DC brake enabled	0	NO	1	YES
Bit11	Droop enabled	0	NO	1	YES
Bit12	Torque control	0	NO	1	YES
Bit13	External fault 1	0	YES	1	NO
Bit15	Command data set (CDS) Bit 1	0	NO	1	YES

Details:

See r2033 (control word 2 from BOP link).

P2040	**CB telegram off time**			**Min:** 0	Level
	CStat: CT	**Datatype:** U16	**Unit:** ms	**Def:** 20	**3**
	P-Group: COMM	**Active:** Immediately	**QuickComm.:** No	**Max:** 65535	

Defines time after which a fault will be generated (F0070) if no telegram is received via the link.

The telegramm off time defines the time, within which a valid telegram must be received. If no valid telegram is received within that time, the inverter trips with F0070.

Dependency:

Setting 0 = watchdog disabled

P2041[5]	**CB parameter**			**Min:** 0	Level
	CStat: CT	**Datatype:** U16	**Unit:** -	**Def:** 0	**3**
	P-Group: COMM	**Active:** first confirm	**QuickComm.:** No	**Max:** 65535	

Configures a communication board (CB).

Index:

P2041[0] : CB parameter 0
P2041[1] : CB parameter 1
P2041[2] : CB parameter 2
P2041[3] : CB parameter 3
P2041[4] : CB parameter 4

Details:

See relevant communication board manual for protocol definition and appropriate settings.

r2050[8]	**CO: PZD from CB**			**Min:** -	Level
		Datatype: U16	**Unit:** -	**Def:** -	**3**
	P-Group: COMM			**Max:** -	

Displays PZD received from communication board (CB).

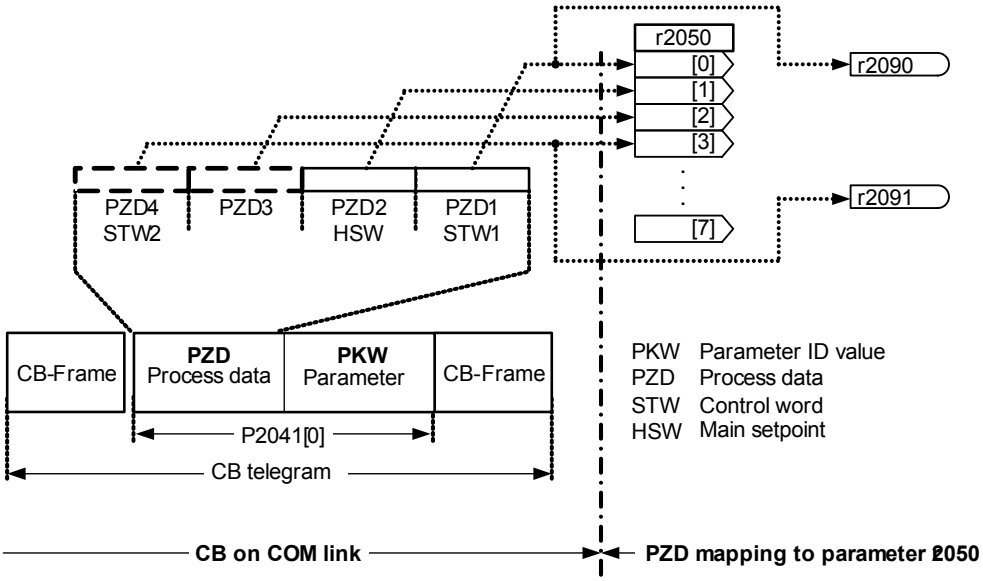

Index:

r2050[0] : Received word 0
r2050[1] : Received word 1
r2050[2] : Received word 2
r2050[3] : Received word 3
r2050[4] : Received word 4
r2050[5] : Received word 5
r2050[6] : Received word 6
r2050[7] : Received word 7

Note:

The control words can be viewed as bit parameters r2090 and r2091.

Restrictions:

- If the above serial interface controls the inverter (P0700 or P0719) then the 1st control word must be transferred in the 1st PZD-word.
- If the setpoint source is selected via P1000 or P0719, then the main setpoint must be transfered in the 2nd PZD-word,
- When P2012 is greater than or equal to 4 the additional control word (2nd control word) must transferred in the 4th PZD-word, if the above serial interface controls the inverter (P0700 or P0719).

P2051[8]	CI: PZD to CB			Min: 0:0	Level
	CStat: CT	Datatype: U32	Unit: -	Def: 52:0	3
	P-Group: COMM	Active: Immediately	QuickComm.: No	Max: 4000:0	

Selects signals (process data PZD) to be transmitted via CB on COM link

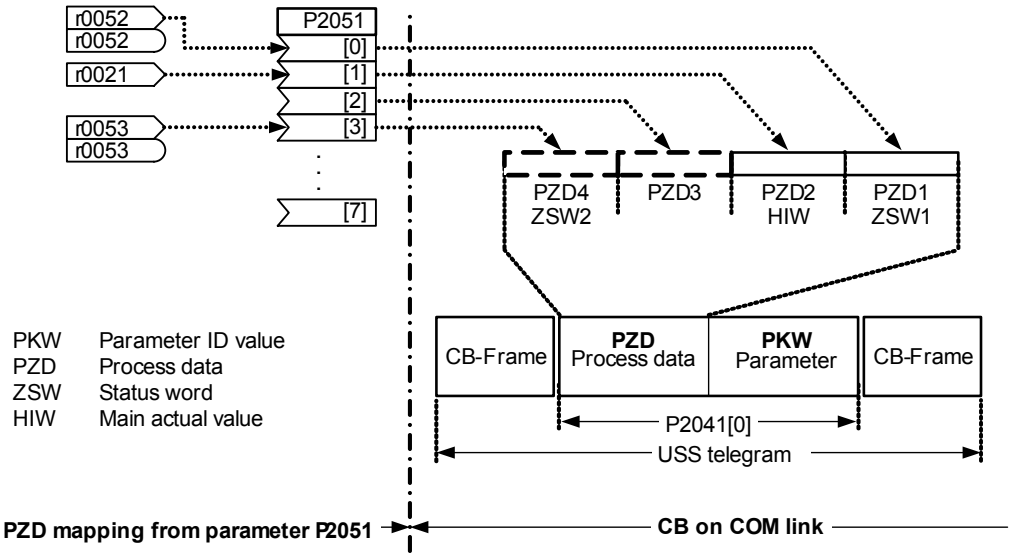

Index:

P2051[0] : Transmitted word 0
P2051[1] : Transmitted word 1
P2051[2] : Transmitted word 2
P2051[3] : Transmitted word 3
P2051[4] : Transmitted word 4
P2051[5] : Transmitted word 5
P2051[6] : Transmitted word 6
P2051[7] : Transmitted word 7

Common Settings:

- Status word 1 = 52 CO/BO: Act. status word 1 (see r0052)
- Actual value 1 = 21 inverter output frequency (see r0021)
- Other BICO settings are possible

r2053[5]	CB identification			Min: -	Level
		Datatype: U16	Unit: -	Def: -	3
	P-Group: COMM			Max: -	

Displays identification data of the communication board (CB). The different CB types (r2053[0]) are given in the Enum declaration.

Possible Settings:

0 No CB option board
1 PROFIBUS DP
2 DeviceNet
256 not defined

Index:

r2053[0] : CB type (PROFIBUS = 1)
r2053[1] : Firmware version
r2053[2] : Firmware version detail
r2053[3] : Firmware date (year)
r2053[4] : Firmware date (day/month)

r2054[7]	CB diagnosis			Min: -	Level
		Datatype: U16	Unit: -	Def: -	3
	P-Group: COMM			Max: -	

Displays diagnostic information of communication board (CB).

Index:

r2054[0] : CB diagnosis 0
r2054[1] : CB diagnosis 1
r2054[2] : CB diagnosis 2
r2054[3] : CB diagnosis 3
r2054[4] : CB diagnosis 4
r2054[5] : CB diagnosis 5
r2054[6] : CB diagnosis 6

Details:

See relevant communications board manual.

r2090	BO: Control word 1 from CB	Min: -	Level
	Datatype: U16 Unit: -	Def: -	3
	P-Group: COMM	Max: -	

Displays control word 1 received from communication board (CB).

Bitfields:

Bit00	ON/OFF1	0	NO	1	YES
Bit01	OFF2: Electrical stop	0	YES	1	NO
Bit02	OFF3: Fast stop	0	YES	1	NO
Bit03	Pulses enabled	0	NO	1	YES
Bit04	RFG enable	0	NO	1	YES
Bit05	RFG start	0	NO	1	YES
Bit06	Setpoint enable	0	NO	1	YES
Bit07	Fault acknowledge	0	NO	1	YES
Bit08	JOG right	0	NO	1	YES
Bit09	JOG left	0	NO	1	YES
Bit10	Control from PLC	0	NO	1	YES
Bit11	Reverse (setpoint inversion)	0	NO	1	YES
Bit13	Motor potentiometer MOP up	0	NO	1	YES
Bit14	Motor potentiometer MOP down	0	NO	1	YES
Bit15	CDS Bit 0 (Local/Remote)	0	NO	1	YES

Details:

See relevant communication board manual for protocol definition and appropriate settings.

r2091	BO: Control word 2 from CB	Min: -	Level
	Datatype: U16 Unit: -	Def: -	3
	P-Group: COMM	Max: -	

Displays control word 2 received from communication board (CB).

Bitfields:

Bit00	Fixed frequency Bit 0	0	NO	1	YES
Bit01	Fixed frequency Bit 1	0	NO	1	YES
Bit02	Fixed frequency Bit 2	0	NO	1	YES
Bit03	Fixed frequency Bit 3	0	NO	1	YES
Bit04	Drive data set (DDS) Bit 0	0	NO	1	YES
Bit05	Drive data set (DDS) Bit 1	0	NO	1	YES
Bit08	PID enabled	0	NO	1	YES
Bit09	DC brake enabled	0	NO	1	YES
Bit11	Droop enabled	0	NO	1	YES
Bit12	Torque control	0	NO	1	YES
Bit13	External fault 1	0	YES	1	NO
Bit15	Command data set (CDS) Bit 1	0	NO	1	YES

Details:

See relevant communication board manual for protocol definition and appropriate settings.

3.35 Faults, Alarms, Monitoring

P2100[3]	Alarm number selection			Min: 0	Level
	CStat: CT	Datatype: U16	Unit: -	Def: 0	3
	P-Group: ALARMS	Active: first confirm	QuickComm.: No	Max: 65535	

Selects up to 3 faults or warnings for non-default reactions.

Index:

P2100[0] : Fault Number 1
P2100[1] : Fault Number 2
P2100[2] : Fault Number 3

Example:

If you want F0005 to perform an OFF3 instead of an OFF2, set P2100[0] = 5, then select the desired reaction in P2101[0] (in this case, set P2101[0] = 3).

Note:

All fault codes have a default reaction to OFF2. Some fault codes caused by hardware trips (e.g. overcurrent) cannot be changed from the default reactions.

P2101[3]	Stop reaction value			Min: 0	Level
	CStat: CT	Datatype: U16	Unit: -	Def: 0	3
	P-Group: ALARMS	Active: first confirm	QuickComm.: No	Max: 4	

Sets drive stop reaction values for fault selected by P2100 (alarm number stop reaction).

This indexed parameter specifies the special reaction to the faults/warnings defined in P2100 indices 0 to 2.

Possible Settings:

0 No reaction, no display
1 OFF1 stop reaction
2 OFF2 stop reaction
3 OFF3 stop reaction
4 No reaction warning only

Index:

P2101[0] : Stop reaction value 1
P2101[1] : Stop reaction value 2
P2101[2] : Stop reaction value 3

Note:

- Settings 0 - 3 only are available for fault codes.
- Settings 0 and 4 only are available for warnings.
- Index 0 (P2101) refers to fault/warning in index 0 (P2100).

P2103[3]	BI: 1. Faults acknowledgement			Min: 0:0	Level
	CStat: CT	Datatype: U32	Unit: -	Def: 722:2	3
	P-Group: COMMANDS	Active: first confirm	QuickComm.: No	Max: 4000:0	

Defines first source of fault acknowledgement, e.g. keypad/DIN, etc. (depending on setting).

Index:

P2103[0] : 1st. Command data set (CDS)
P2103[1] : 2nd. Command data set (CDS)
P2103[2] : 3rd. Command data set (CDS)

Common Settings:

722.0 = Digital input 1 (requires P0701 to be set to 99, BICO)
722.1 = Digital input 2 (requires P0702 to be set to 99, BICO)
722.2 = Digital input 3 (requires P0703 to be set to 99, BICO)
722.3 = Digital input 4 (requires P0704 to be set to 99, BICO)
722.4 = Digital input 5 (requires P0705 to be set to 99, BICO)
722.5 = Digital input 6 (requires P0706 to be set to 99, BICO)
722.6 = Digital input 7 (via analog input 1, requires P0707 to be set to 99)
722.7 = Digital input 8 (via analog input 2, requires P0708 to be set to 99)

P2104[3]	**BI: 2. Faults acknowledgement**			**Min:** 0:0	Level
	CStat: CT	**Datatype:** U32	**Unit:** -	**Def:** 0:0	**3**
	P-Group: COMMANDS	**Active:** first confirm	**QuickComm.:** No	**Max:** 4000:0	

Selects second source of fault acknowledgement.

Index:

P2104[0] : 1st. Command data set (CDS)
P2104[1] : 2nd. Command data set (CDS)
P2104[2] : 3rd. Command data set (CDS)

Common Settings:

722.0 = Digital input 1 (requires P0701 to be set to 99, BICO)
722.1 = Digital input 2 (requires P0702 to be set to 99, BICO)
722.2 = Digital input 3 (requires P0703 to be set to 99, BICO)
722.3 = Digital input 4 (requires P0704 to be set to 99, BICO)
722.4 = Digital input 5 (requires P0705 to be set to 99, BICO)
722.5 = Digital input 6 (requires P0706 to be set to 99, BICO)
722.6 = Digital input 7 (via analog input 1, requires P0707 to be set to 99)
722.7 = Digital input 8 (via analog input 2, requires P0708 to be set to 99)

P2106[3]	**BI: External fault**			**Min:** 0:0	Level
	CStat: CT	**Datatype:** U32	**Unit:** -	**Def:** 1:0	**3**
	P-Group: COMMANDS	**Active:** first confirm	**QuickComm.:** No	**Max:** 4000:0	

Selects source of external faults.

Index:

P2106[0] : 1st. Command data set (CDS)
P2106[1] : 2nd. Command data set (CDS)
P2106[2] : 3rd. Command data set (CDS)

Common Settings:

722.0 = Digital input 1 (requires P0701 to be set to 99, BICO)
722.1 = Digital input 2 (requires P0702 to be set to 99, BICO)
722.2 = Digital input 3 (requires P0703 to be set to 99, BICO)
722.3 = Digital input 4 (requires P0704 to be set to 99, BICO)
722.4 = Digital input 5 (requires P0705 to be set to 99, BICO)
722.5 = Digital input 6 (requires P0706 to be set to 99, BICO)
722.6 = Digital input 7 (via analog input 1, requires P0707 to be set to 99)
722.7 = Digital input 8 (via analog input 2, requires P0708 to be set to 99)

r2110[4]	**Warning number**			**Min:** -	Level
		Datatype: U16	**Unit:** -	**Def:** -	**2**
	P-Group: ALARMS			**Max:** -	

Displays warning information.

A maximum of 2 active warnings (indices 0 and 1) and 2 historical warnings (indices 2 and 3) may be viewed.

Index:

r2110[0] : Recent Warnings --, warning 1
r2110[1] : Recent Warnings --, warning 2
r2110[2] : Recent Warnings -1, warning 3
r2110[3] : Recent Warnings -1, warning 4

Note:

- Indices 0 and 1 are not stored.
- The keypad will flash while a warning is active. The LEDs indicate the warning status in this case.
- If an AOP is in use, the display will show number and text of the active warning.

P2111	**Total number of warnings**			**Min:** 0	Level
	CStat: CT	**Datatype:** U16	**Unit:** -	**Def:** 0	**3**
	P-Group: ALARMS	**Active:** first confirm	**QuickComm.:** No	**Max:** 4	

Displays number of warning (up to 4) since last reset. Set to 0 to reset the warning history.

r2114[2]	**Run time counter**			**Min:** -	Level
		Datatype: U16	**Unit:** -	**Def:** -	**3**
	P-Group: ALARMS			**Max:** -	

Displays run time counter.

It is the total time the drive has been powered up. When power goes value is saved, then restored on powerup. The run time counter r2114 will be calculate as followed:
- Multiply the value in r2114[0], by 65536 and then add it to the value in r2114[1].
- The resultant answer will be in seconds.

When AOP is not connected, the time in this parameter is used by r0948 to indicate when a fault has occured.

Index:

r2114[0] : System Time, Seconds, Upper Word
r2114[1] : System Time, Seconds, Lower Word

Example:

If r2114[0] = 1 & r2114[1] = 20864
We get 1 * 65536 + 20864 = 86400 seconds which equals 1 day.

P2115[3]	**AOP real time clock**			**Min:** 0	Level
	CStat: CT	**Datatype:** U16	**Unit:** -	**Def:** 0	**3**
	P-Group: ALARMS	**Active:** Immediately	**QuickComm.:** No	**Max:** 65535	

Displays AOP real time.

All of the frequency inverters have an internal time generator function which is used to time-stamp and log erroneous conditions. Therefore there is no battery-buffered real-time clock (RTC). The frequency inverters can support a software-controlled RTC where the RTC must be set from the AOP or via an interface. When using the AOP, this synchronization is automatic. When a serial interface is used, a task must be sent from the higher-level control to write into the parameter. If the AOP is withdrawn during operation, or if the bus is interrupted, then the real-time clock runs further using the runtime counter. The real-time clock is reset to zero only after power off.

The time is stored in a word array parameter P2115. This parameter number is common to all invertes. Inverters not supporting this feature would respond with parameter not recognised - a Master will ignore this. The time will be set by USS Protocol standard word array parameter write telegrams.

Within the AOP, while it is acting as a USS Master, at each tick of the heartbeat, the list of available USS Slaves will be flagged with a time update request. As the Master runs around the list of USS slaves on its next USS update cycle, if there are no higher priority tasks to perform, and the slave still has its time update flag set, then an array parameter write telegram will be issued, containing the current time. The request for that slave is cancelled if the slave responds correctly. The AOP will not need to read the time from the slave.

Time is maintained in a word array parameter and encoded as follows - the same format will be used in fault report logs.

Index	High Byte (MSB)	Low Byte (LSB)
0	Seconds (0 - 59)	Minutes (0 - 59)
1	Hours (0 - 23)	Days (1 - 31)
2	Month (1 - 12)	Years (00 - 250)

Time is measured from Jan 1st 2000. Values are in binary form.

Index:

P2115[0] : Real Time, Seconds+Minutes
P2115[1] : Real Time, Hours+Days
P2115[2] : Real Time, Month+Year

Example:

P2115[0] = 13625
P2115[1] = 2579
P2115[2] = 516

The conversion into binary quantities (U16) results in the following bit pattern:
Seconds + minutes:
- High byte (MSB) = 00110101 corresponding to the number 53, i.e. seconds 53
- Low byte (LSB) = 00111001 corresponding to the number 57, i.e. minutes 57

Hours + days:
- High byte (MSB) = 00001010 corresponding to the number 10, i.e. hours 10
- Low byte (LSB) = 00010011 corresponding to the number 19, i.e. days 19

Months + year:
- High byte (MSB) = 00000010 corresponding to the number 2, i.e. months 2
- Low byte (LSB) = 00000100 corresponding to the number 4, i.e. years 4

This means that the real time displayed in P2115 is 19.02.2004, 10:57:53.

P2120	**Indication counter**			**Min:** 0	Level
	CStat: CUT	**Datatype:** U16	**Unit:** -	**Def:** 0	**4**
	P-Group: ALARMS	**Active:** Immediately	**QuickComm.:** No	**Max:** 65535	

Indicates total number of alarm events. This parameter is incremented whenever an alarm event occurs. It also gets incremented when a warning is cleared or faults are cleared.

This parameter is used by the PC tools.

P2150[3]	**Hysteresis frequency f_hys**			**Min:** 0.00	Level
	CStat: CUT	**Datatype:** Float	**Unit:** Hz	**Def:** 3.00	**3**
	P-Group: ALARMS	**Active:** Immediately	**QuickComm.:** No	**Max:** 10.00	

Defines hysteresis level applied for comparing frequency and speed to threshold as illustrated in the diagram below.

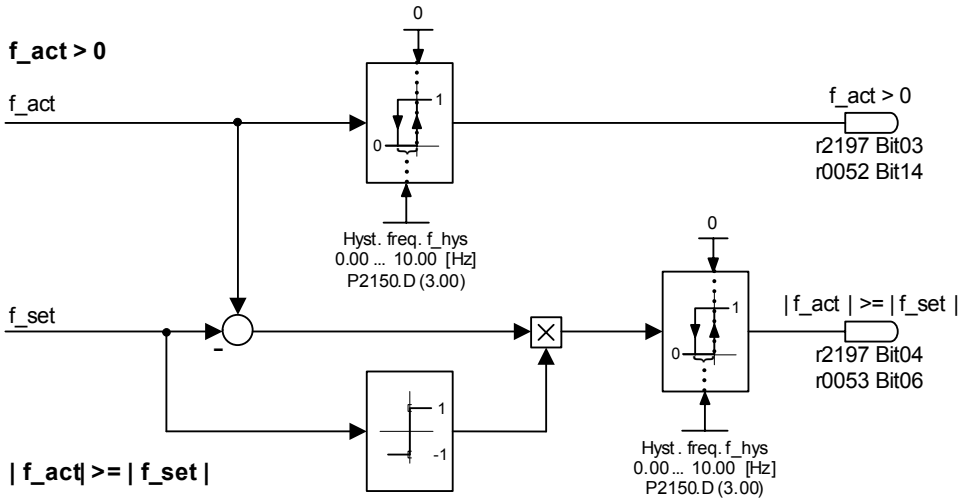

Index:

P2150[0] : 1st. Drive data set (DDS)
P2150[1] : 2nd. Drive data set (DDS)
P2150[2] : 3rd. Drive data set (DDS)

P2153[3]	**Time-constant frequency filter**			**Min:** 0	Level
	CStat: CUT	**Datatype:** U16	**Unit:** ms	**Def:** 5	**2**
	P-Group: ALARMS	**Active:** Immediately	**QuickComm.:** No	**Max:** 1000	

Specifies time constant of first-order frequency filter. The filtered frequency is then compared to the thresholds.

Index:

P2153[0] : 1st. Drive data set (DDS)
P2153[1] : 2nd. Drive data set (DDS)
P2153[2] : 3rd. Drive data set (DDS)

Details:

See diagram in P2155, P2157 and P2159

P2155[3]	Threshold frequency f_1			Min: 0.00	Level
	CStat: CUT	Datatype: Float	Unit: Hz	Def: 30.00	3
	P-Group: ALARMS	Active: Immediately	QuickComm.: No	Max: 650.00	

Sets a threshold for comparing actual frequency or frequency to threshold values f_1. This threshold controls status bits 4 and 5 in status word 2 (r0053).

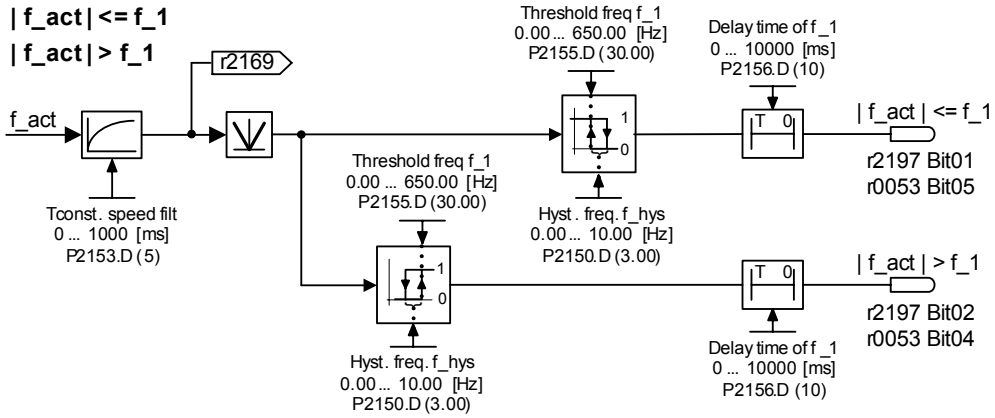

Index:

P2155[0] : 1st. Drive data set (DDS)
P2155[1] : 2nd. Drive data set (DDS)
P2155[2] : 3rd. Drive data set (DDS)

P2156[3]	Delay time of threshold freq f_1			Min: 0	Level
	CStat: CUT	Datatype: U16	Unit: ms	Def: 10	3
	P-Group: ALARMS	Active: Immediately	QuickComm.: No	Max: 10000	

Sets delay time prior to threshold frequency f_1 comparison (P2155).

Index:

P2156[0] : 1st. Drive data set (DDS)
P2156[1] : 2nd. Drive data set (DDS)
P2156[2] : 3rd. Drive data set (DDS)

Details:

See diagram in P2155 (threshold frequency f_1)

P2157[3]	Threshold frequency f_2			Min: 0.00	Level
	CStat: CUT	Datatype: Float	Unit: Hz	Def: 30.00	2
	P-Group: ALARMS	Active: Immediately	QuickComm.: No	Max: 650.00	

Threshold_2 for comparing frequency or frequency to thresholds as illustrated in the diagram below.

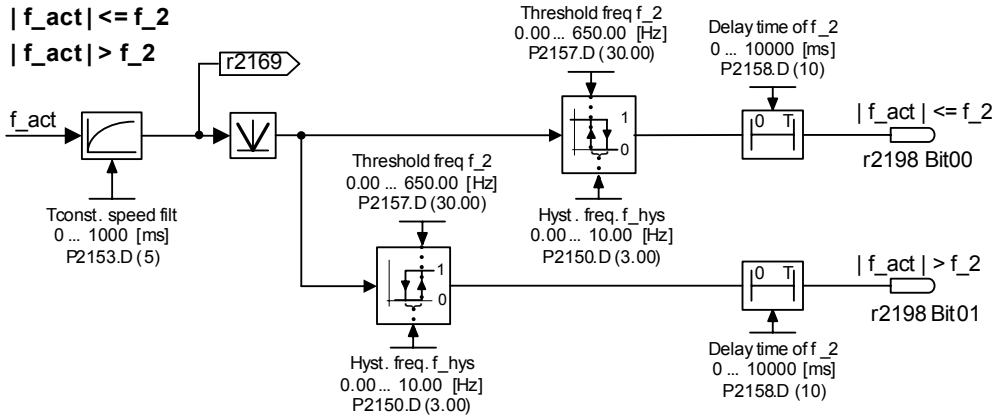

Index:

P2157[0] : 1st. Drive data set (DDS)
P2157[1] : 2nd. Drive data set (DDS)
P2157[2] : 3rd. Drive data set (DDS)

P2158[3]	Delay time of threshold freq f_2			Min: 0	Level
	CStat: CUT	Datatype: U16	Unit: ms	Def: 10	2
	P-Group: ALARMS	Active: Immediately	QuickComm.: No	Max: 10000	

Delay time for comparing frequency to threshold f_2 (P2157).

Index:

P2158[0] : 1st. Drive data set (DDS)
P2158[1] : 2nd. Drive data set (DDS)
P2158[2] : 3rd. Drive data set (DDS)

Details:

See diagram in P2157 (threshold frequency f_2)

P2159[3]	**Threshold frequency f_3**			**Min:** 0.00	Level
	CStat: CUT	**Datatype:** Float	**Unit:** Hz	**Def:** 30.00	**2**
	P-Group: ALARMS	**Active:** Immediately	**QuickComm.:** No	**Max:** 650.00	

Threshold_3 for comparing frequency to thresholds.

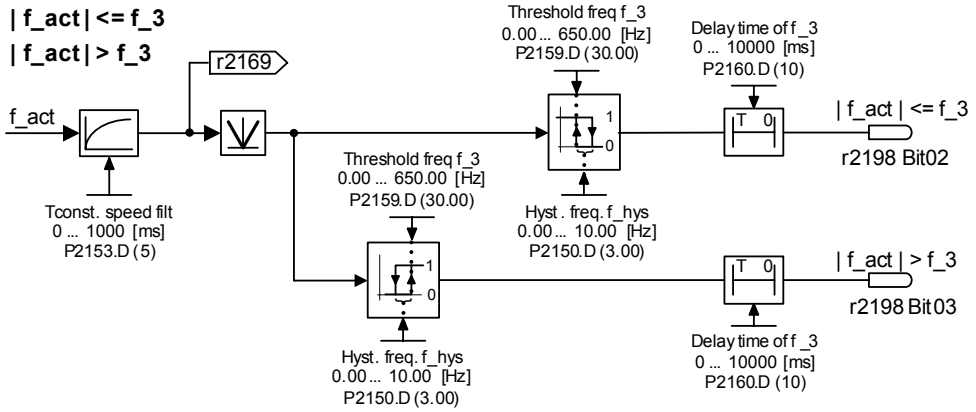

Index:

P2159[0] : 1st. Drive data set (DDS)
P2159[1] : 2nd. Drive data set (DDS)
P2159[2] : 3rd. Drive data set (DDS)

P2160[3]	**Delay time of threshold freq f_3**			**Min:** 0	Level
	CStat: CUT	**Datatype:** U16	**Unit:** ms	**Def:** 10	**2**
	P-Group: ALARMS	**Active:** Immediately	**QuickComm.:** No	**Max:** 10000	

Delay time for comparing frequency to threshold f_3 (P2159).

Index:

P2160[0] : 1st. Drive data set (DDS)
P2160[1] : 2nd. Drive data set (DDS)
P2160[2] : 3rd. Drive data set (DDS)

Details:

See diagram in P2159 (threshold frequency f_3)

P2161[3]	**Min. threshold for freq. setp.**			**Min:** 0.00	Level
	CStat: CUT	**Datatype:** Float	**Unit:** Hz	**Def:** 3.00	**2**
	P-Group: ALARMS	**Active:** Immediately	**QuickComm.:** No	**Max:** 10.00	

Minimum threshold value for comparing frequency setpoint.

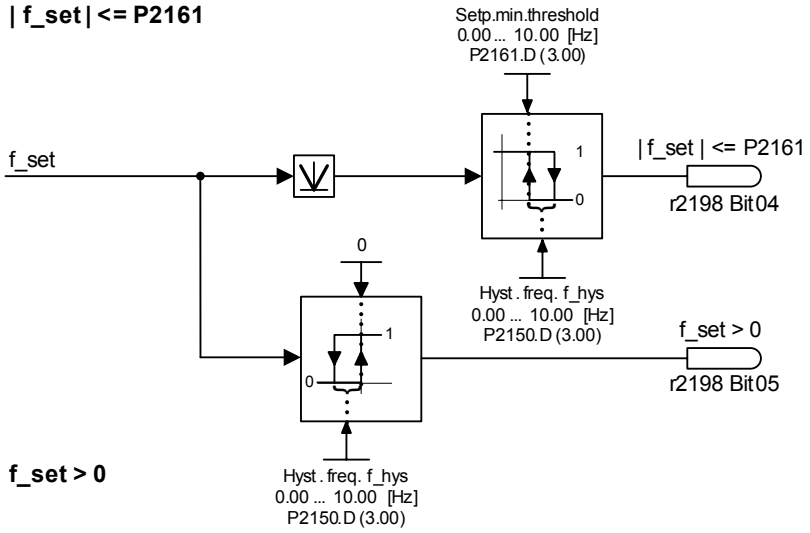

Index:

P2161[0] : 1st. Drive data set (DDS)
P2161[1] : 2nd. Drive data set (DDS)
P2161[2] : 3rd. Drive data set (DDS)

P2162[3]	Hysteresis freq. for overfreq.			Min: 0.00	Level
	CStat: CUT	Datatype: Float	Unit: Hz	Def: 20.00	2
	P-Group: ALARMS	Active: Immediately	QuickComm.: No	Max: 650.00	

Hysteresis frequency for overfrequency-detection as illustrated in the diagram below.

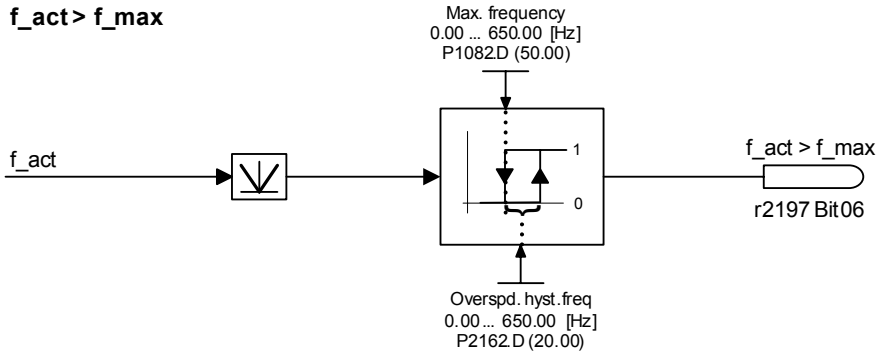

Index:

P2162[0] : 1st. Drive data set (DDS)
P2162[1] : 2nd. Drive data set (DDS)
P2162[2] : 3rd. Drive data set (DDS)

P2163[3]	Entry freq. for perm. deviation			Min: 0.00	Level
	CStat: CUT	Datatype: Float	Unit: Hz	Def: 3.00	2
	P-Group: ALARMS	Active: Immediately	QuickComm.: No	Max: 20.00	

Threshold for detecting frequency deviation from setpoint as illustrated in the diagram P2164.

Index:

P2163[0] : 1st. Drive data set (DDS)
P2163[1] : 2nd. Drive data set (DDS)
P2163[2] : 3rd. Drive data set (DDS)

P2164[3]	Hysteresis frequency deviation			Min: 0.00	Level
	CStat: CUT	Datatype: Float	Unit: Hz	Def: 3.00	3
	P-Group: ALARMS	Active: Immediately	QuickComm.: No	Max: 10.00	

Hysteresis frequency for detecting permitted deviation (from setpoint). This frequency controls bit 8 in status word 1 (r0052) and bit 6 in status word 2 (r0053).

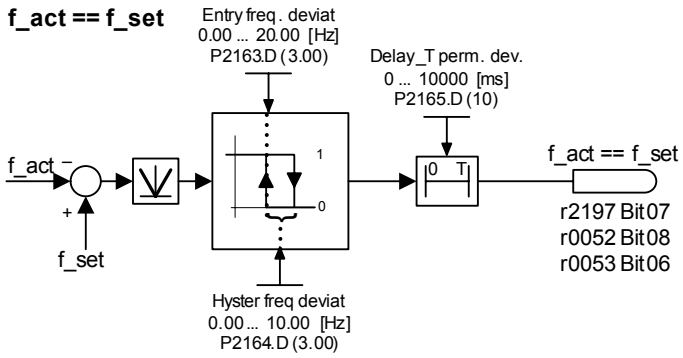

Index:

P2164[0] : 1st. Drive data set (DDS)
P2164[1] : 2nd. Drive data set (DDS)
P2164[2] : 3rd. Drive data set (DDS)

P2165[3]	Delay time permitted deviation			Min: 0	Level
	CStat: CUT	Datatype: U16	Unit: ms	Def: 10	2
	P-Group: ALARMS	Active: Immediately	QuickComm.: No	Max: 10000	

Delay time for detecting permitted deviation of frequency from setpoint.

Index:

P2165[0] : 1st. Drive data set (DDS)
P2165[1] : 2nd. Drive data set (DDS)
P2165[2] : 3rd. Drive data set (DDS)

Details:

See diagram in P2164.

P2166[3]	**Delay time ramp up completed**			**Min:** 0	Level
	CStat: CUT	**Datatype:** U16	**Unit:** ms	**Def:** 10	**2**
	P-Group: ALARMS	**Active:** Immediately	**QuickComm.:** No	**Max:** 10000	

Delay time for signal that indicates completion of ramp-up.

Index:

P2166[0] : 1st. Drive data set (DDS)
P2166[1] : 2nd. Drive data set (DDS)
P2166[2] : 3rd. Drive data set (DDS)

Details:

See diagram in P2174.

P2167[3]	**Switch-off frequency f_off**			**Min:** 0.00	Level
	CStat: CUT	**Datatype:** Float	**Unit:** Hz	**Def:** 1.00	**3**
	P-Group: ALARMS	**Active:** Immediately	**QuickComm.:** No	**Max:** 10.00	

Defines the threshold of the monitoring function |f_act| <= P2167 (f_off).

P2167 influences following functions:

- If the actual frequency falls below this threshold and the time delay has expired, bit 1 in status word 2 (r0053) is reset.
- If a OFF1 or OFF3 was applied and bit 1 is reset the inverter will disable the pulse (OFF2).

Restriction:

- The monitoring function |f_act| <= P2167 (f_off) is not updated and pulses are not disabled, if motor holding brake (MHB, P1215 = 1) is enabled.

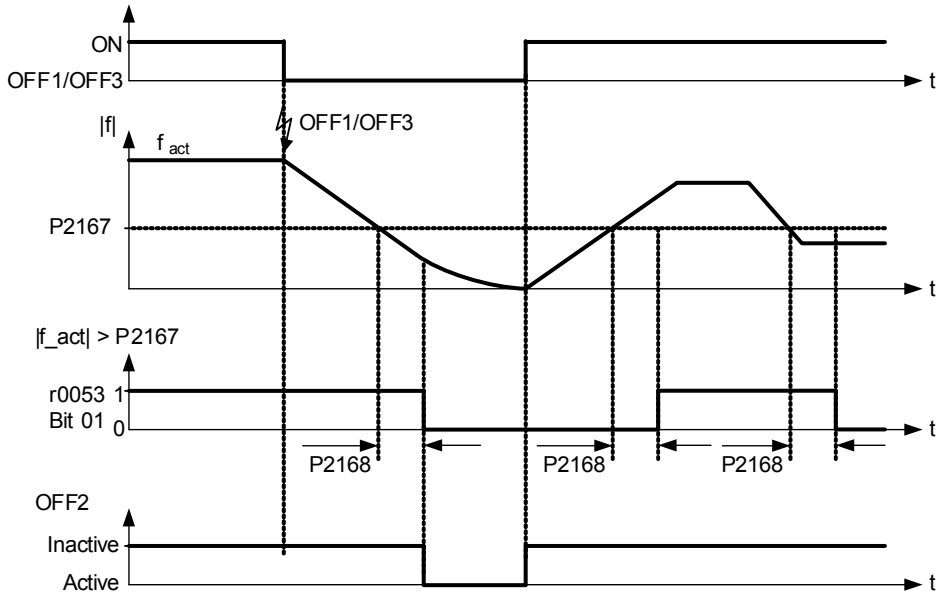

Index:

P2167[0] : 1st. Drive data set (DDS)
P2167[1] : 2nd. Drive data set (DDS)
P2167[2] : 3rd. Drive data set (DDS)

P2168[3]	**Delay time T_off**			**Min:** 0	Level
	CStat: CUT	**Datatype:** U16	**Unit:** ms	**Def:** 10	**3**
	P-Group: ALARMS	**Active:** Immediately	**QuickComm.:** No	**Max:** 10000	

Defines time for which the inverter may operate below switch-off frequency (P2167) before switch off occurs.

Index:

P2168[0] : 1st. Drive data set (DDS)
P2168[1] : 2nd. Drive data set (DDS)
P2168[2] : 3rd. Drive data set (DDS)

Dependency:

Active if holding brake (P1215) not parameterized.

Details:

See diagram in P2167 (switch-off frequency)

r2169	**CO: Act. filtered frequency 3**			**Min:** -	Level
		Datatype: Float	**Unit:** Hz	**Def:** -	**2**
	P-Group: ALARMS			**Max:** -	

Filtered frequency for monitoring behind first-order lowpass filter.
- |f_act| > f_1 (see P2155)
- |f_act| > f_2 (see P2157)
- |f_act| > f_3 (see P2159)

P2170[3]	**Threshold current I_thresh**			**Min:** 0.0	Level
	CStat: CUT	**Datatype:** Float	**Unit:** %	**Def:** 100.0	**3**
	P-Group: ALARMS	**Active:** Immediately	**QuickComm.:** No	**Max:** 400.0	

Defines threshold current in [%] relative to P0305 (rated motor current) to be used in comparisons of I_act and I_Thresh as illustrated in the diagram below.

|I_act| > I_thresh

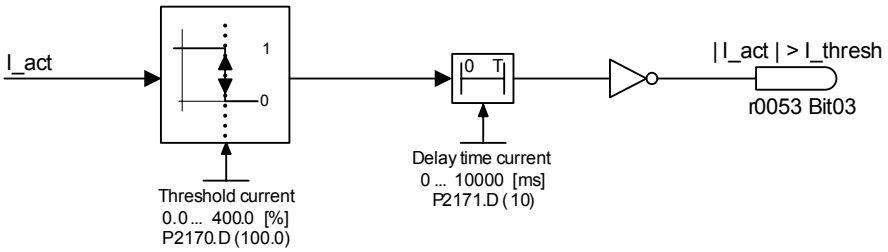

Index:

P2170[0] : 1st. Drive data set (DDS)
P2170[1] : 2nd. Drive data set (DDS)
P2170[2] : 3rd. Drive data set (DDS)

Note:

This threshold controls bit 3 in status word 3 (r0053).

P2171[3]	**Delay time current**			**Min:** 0	Level
	CStat: CUT	**Datatype:** U16	**Unit:** ms	**Def:** 10	**3**
	P-Group: ALARMS	**Active:** Immediately	**QuickComm.:** No	**Max:** 10000	

Defines delay time prior to activation of current comparison.

Index:

P2171[0] : 1st. Drive data set (DDS)
P2171[1] : 2nd. Drive data set (DDS)
P2171[2] : 3rd. Drive data set (DDS)

Details:

See diagram in P2170 (threshold current I_thresh)

P2172[3]	**Threshold DC-link voltage**			**Min:** 0	Level
	CStat: CUT	**Datatype:** U16	**Unit:** V	**Def:** 800	**3**
	P-Group: ALARMS	**Active:** Immediately	**QuickComm.:** No	**Max:** 2000	

Defines DC link voltage to be compared to actual voltage as illustrated in the diagram below.

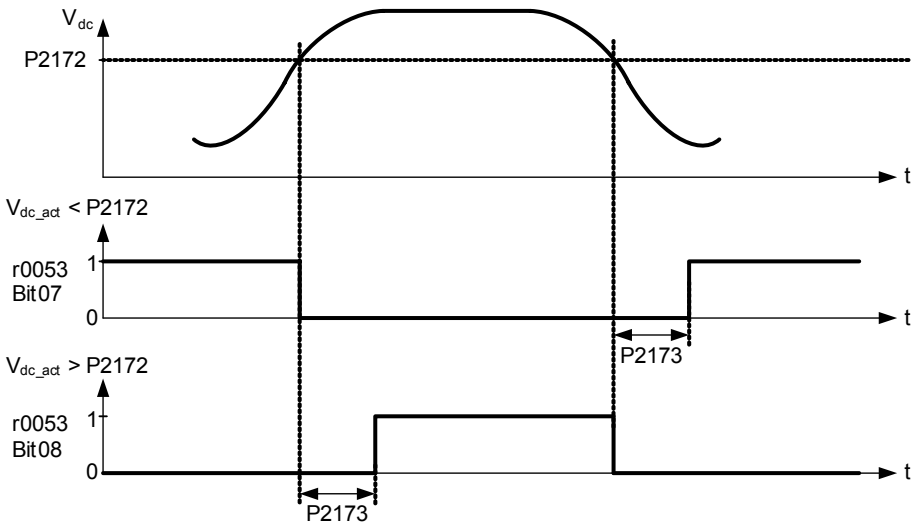

Index:

P2172[0] : 1st. Drive data set (DDS)
P2172[1] : 2nd. Drive data set (DDS)
P2172[2] : 3rd. Drive data set (DDS)

Note:

This voltage controls bits 7 and 8 in status word 3 (r0053).

P2173[3]	**Delay time DC-link voltage**			**Min:** 0	Level
	CStat: CUT	**Datatype:** U16	**Unit:** ms	**Def:** 10	**3**
	P-Group: ALARMS	**Active:** Immediately	**QuickComm.:** No	**Max:** 10000	

Defines delay time prior to activation of threshold comparison.

Index:

P2173[0] : 1st. Drive data set (DDS)
P2173[1] : 2nd. Drive data set (DDS)
P2173[2] : 3rd. Drive data set (DDS)

Details:

See diagram in P2172 (threshold DC-link voltage)

P2174[3]	**Torque threshold M_thresh**			**Min:** 0.00	Level
	CStat: CUT	**Datatype:** Float	**Unit:** Nm	**Def:** 5.13	**2**
	P-Group: ALARMS	**Active:** Immediately	**QuickComm.:** No	**Max:** 99999.00	

Defines torque threshold for comparing actual torque.

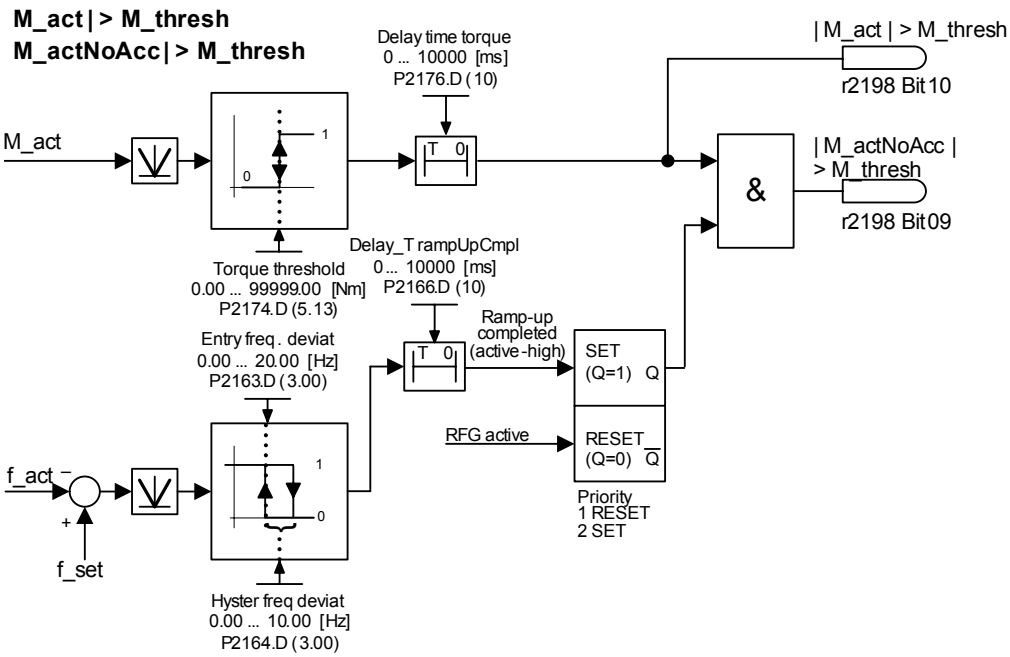

Index:

P2174[0] : 1st. Drive data set (DDS)
P2174[1] : 2nd. Drive data set (DDS)
P2174[2] : 3rd. Drive data set (DDS)

P2176[3]	**Delay time for torque threshold**			**Min:** 0	Level
	CStat: CUT	**Datatype:** U16	**Unit:** ms	**Def:** 10	**2**
	P-Group: ALARMS	**Active:** Immediately	**QuickComm.:** No	**Max:** 10000	

Delay time for comparing actual torque to threshold.

Index:

P2176[0] : 1st. Drive data set (DDS)
P2176[1] : 2nd. Drive data set (DDS)
P2176[2] : 3rd. Drive data set (DDS)

P2177[3]	**Delay time for motor is blocked**			**Min:** 0	Level
	CStat: CUT	**Datatype:** U16	**Unit:** ms	**Def:** 10	**2**
	P-Group: ALARMS	**Active:** Immediately	**QuickComm.:** No	**Max:** 10000	

Delay time for identification that motor is blocked.

Index:

P2177[0] : 1st. Drive data set (DDS)
P2177[1] : 2nd. Drive data set (DDS)
P2177[2] : 3rd. Drive data set (DDS)

P2178[3]	**Delay time for motor pulled out**			**Min:** 0	Level
	CStat: CUT	**Datatype:** U16	**Unit:** ms	**Def:** 10	**2**
	P-Group: ALARMS	**Active:** Immediately	**QuickComm.:** No	**Max:** 10000	

Delay time for identification that motor is pulled out.

Index:

P2178[0] : 1st. Drive data set (DDS)
P2178[1] : 2nd. Drive data set (DDS)
P2178[2] : 3rd. Drive data set (DDS)

P2179	**Current limit for no load ident.**			**Min:** 0.0	Level
	CStat: CUT	**Datatype:** Float	**Unit:** %	**Def:** 3.0	**3**
	P-Group: ALARMS	**Active:** Immediately	**QuickComm.:** No	**Max:** 10.0	

Threshold current for A0922 (load missing) in [%] relative to P0305 (rated motor current) as illustrated in the diagram below.

Load missing

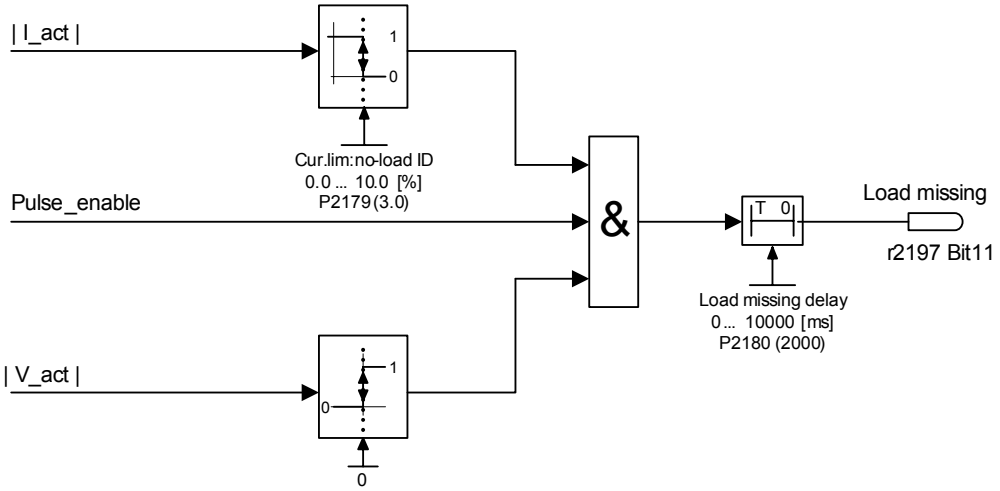

Note:

- It may be that the motor is not connected (load missing) or a phase could be missing.
- If a motor setpoint cannot be entered and the current limit (P2179) is not exceeded, Alarm A0922 (no load applied) is issued when delay time (P2180) expires.

P2180	**Delay time for load missing**			**Min:** 0	Level
	CStat: CUT	**Datatype:** U16	**Unit:** ms	**Def:** 2000	**3**
	P-Group: ALARMS	**Active:** Immediately	**QuickComm.:** No	**Max:** 10000	

Delay time to identify that the current is less than the threshold defined in P2179.

Details:

See diagram in P2179 (current limit for no load identification).

3.36 Load torque monitoring

P2181[3]	**Belt failure detection mode**			**Min:** 0	Level
	CStat: CT	**Datatype:** U16	**Unit:** -	**Def:** 0	**2**
	P-Group: ALARMS	**Active:** first confirm	**QuickComm.:** No	**Max:** 6	

Parameter P2181 activates or de-activates the load torque monitoring and defines the response to a load torque fault.

Using the load torque monitoring, it is possible to detect a mechanical failure or an overload condition of the mechanical transmission line, e.g. a broken drive belt or a stalled conveyor belt. In this case, the actual torque/frequency actual value is compared to a programmed envelope characteristic (refer to P2182 - P2190). If the actual torque/frequency actual value lies above or below the envelope curve, then after the delay time P2192 expires, as a function of P2181, alarm A0952 is output or the drive inverter is tripped with fault message F0452.

Possible Settings:

0 Belt failure detection disabled
1 Warning: Low torque / frequency
2 Warning: High torque / frequency
3 Warning: High / low torque / frequency
4 Trip: Low torque / frequency
5 Trip: High torque / frequency
6 Trip: High / low torque / frequency

Index:

P2181[0] : 1st. Command data set (CDS)
P2181[1] : 2nd. Command data set (CDS)
P2181[2] : 3rd. Command data set (CDS)

P2182[3]	**Belt threshold frequency 1**			**Min:** 0.00	Level
	CStat: CUT	**Datatype:** Float	**Unit:** Hz	**Def:** 5.00	**3**
	P-Group: ALARMS	**Active:** Immediately	**QuickComm.:** No	**Max:** 650.00	

Sets a frequency threshold 1 for comparing actual torque to torque the envelope for belt failure detection.

The frequency torque envelope is defined by 9 parameters - 3 are frequency parameters (P2182 - P2184), and the other 6 define the low and high torque limits (P2185 - P2190) for each frequency (see diagram below).

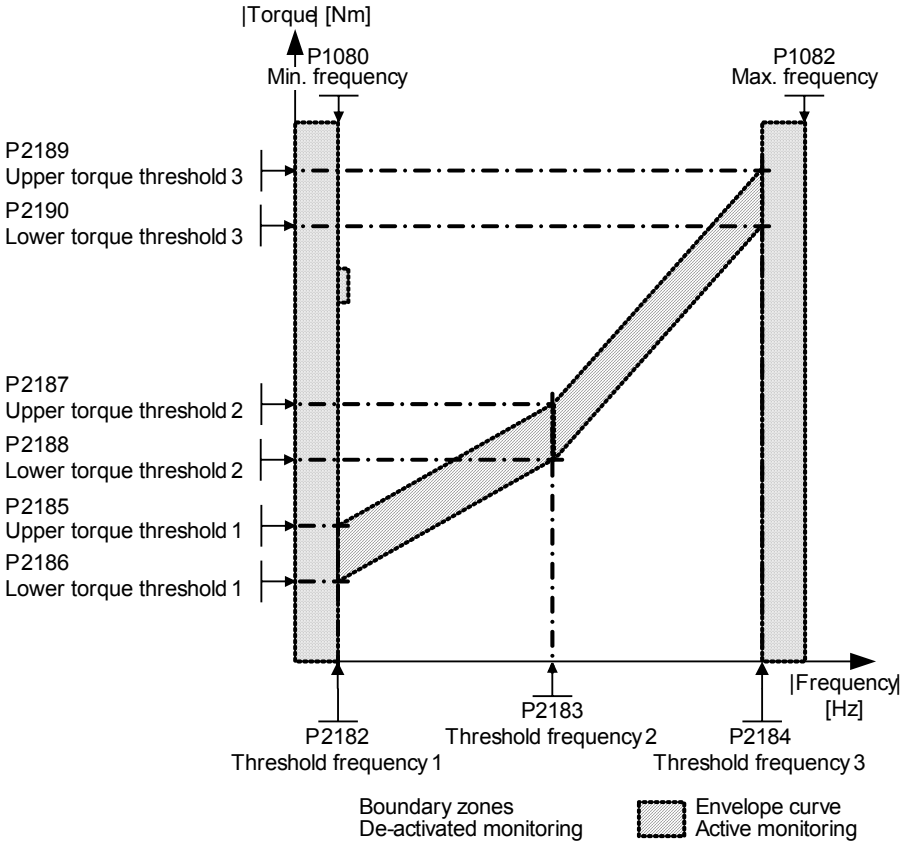

The allowed frequency/torque region is defined by the shaded area. When the torque falls outside the area shown, a trip or warning occurs (see parameter P2181).

Index:

P2182[0] : 1st. Drive data set (DDS)
P2182[1] : 2nd. Drive data set (DDS)
P2182[2] : 3rd. Drive data set (DDS)

Note:

- The load torque monitoring function is not active below the frequency defined in P2182 and above the frequency defined in P2184.
- The current and torque limits of the drive inverter and motor still apply over the complete frequency range.
- The drive inverter output frequency is defined using Parameter P1080 and P1082. These limits should be carefully observed for the load torque monitoring frequencies.

P2183[3]	**Belt threshold frequency 2**			**Min:** 0.00	Level
	CStat: CUT	**Datatype:** Float	**Unit:** Hz	**Def:** 30.00	**2**
	P-Group: ALARMS	**Active:** Immediately	**QuickComm.:** No	**Max:** 650.00	

Sets a threshold F2 for comparing actual torque to torque the envelope for belt failure detection.

Index:

P2183[0] : 1st. Drive data set (DDS)
P2183[1] : 2nd. Drive data set (DDS)
P2183[2] : 3rd. Drive data set (DDS)

Details:

See P2182 (belt threshold frequency 1).

P2184[3]	Belt threshold frequency 3			Min: 0.00	Level
	CStat: CUT	Datatype: Float	Unit: Hz	Def: 50.00	2
	P-Group: ALARMS	Active: Immediately	QuickComm.: No	Max: 650.00	

Sets a threshold F3 for comparing actual torque to torque the envelope for belt failure detection.

Index:

P2184[0] : 1st. Drive data set (DDS)
P2184[1] : 2nd. Drive data set (DDS)
P2184[2] : 3rd. Drive data set (DDS)

Details:

See P2182 (belt threshold frequency 1).

P2185[3]	Upper torque threshold 1			Min: 0.0	Level
	CStat: CUT	Datatype: Float	Unit: Nm	Def: 99999.0	2
	P-Group: ALARMS	Active: Immediately	QuickComm.: No	Max: 99999.0	

Upper limit threshold value 1 for comparing actual torque.

Index:

P2185[0] : 1st. Drive data set (DDS)
P2185[1] : 2nd. Drive data set (DDS)
P2185[2] : 3rd. Drive data set (DDS)

Details:

See P2182 (belt threshold frequency 1).

P2186[3]	Lower torque threshold 1			Min: 0.0	Level
	CStat: CUT	Datatype: Float	Unit: Nm	Def: 0.0	2
	P-Group: ALARMS	Active: Immediately	QuickComm.: No	Max: 99999.0	

Lower limit threshold value 1 for comparing actual torque.

Index:

P2186[0] : 1st. Drive data set (DDS)
P2186[1] : 2nd. Drive data set (DDS)
P2186[2] : 3rd. Drive data set (DDS)

Details:

See P2182 (belt threshold frequency 1).

P2187[3]	Upper torque threshold 2			Min: 0.0	Level
	CStat: CUT	Datatype: Float	Unit: Nm	Def: 99999.0	2
	P-Group: ALARMS	Active: Immediately	QuickComm.: No	Max: 99999.0	

Upper limit threshold value 2 for comparing actual torque.

Index:

P2187[0] : 1st. Drive data set (DDS)
P2187[1] : 2nd. Drive data set (DDS)
P2187[2] : 3rd. Drive data set (DDS)

Details:

See P2182 (belt threshold frequency 1).

P2188[3]	Lower torque threshold 2			Min: 0.0	Level
	CStat: CUT	Datatype: Float	Unit: Nm	Def: 0.0	2
	P-Group: ALARMS	Active: Immediately	QuickComm.: No	Max: 99999.0	

Lower limit threshold value 2 for comparing actual torque.

Index:

P2188[0] : 1st. Drive data set (DDS)
P2188[1] : 2nd. Drive data set (DDS)
P2188[2] : 3rd. Drive data set (DDS)

Details:

See P2182 (belt threshold frequency 1).

P2189[3]	Upper torque threshold 3			Min: 0.0	Level
	CStat: CUT	Datatype: Float	Unit: Nm	Def: 99999.0	2
	P-Group: ALARMS	Active: Immediately	QuickComm.: No	Max: 99999.0	

Upper limit threshold value 3 for comparing actual torque.

Index:

P2189[0] : 1st. Drive data set (DDS)
P2189[1] : 2nd. Drive data set (DDS)
P2189[2] : 3rd. Drive data set (DDS)

Details:

See P2182 (belt threshold frequency 1).

P2190[3]	**Lower torque threshold 3**			**Min:** 0.0	Level
	CStat: CUT	**Datatype:** Float	**Unit:** Nm	**Def:** 0.0	**2**
	P-Group: ALARMS	**Active:** Immediately	**QuickComm.:** No	**Max:** 99999.0	

Lower limit threshold value 3 for comparing actual torque.

Index:

P2190[0] : 1st. Drive data set (DDS)
P2190[1] : 2nd. Drive data set (DDS)
P2190[2] : 3rd. Drive data set (DDS)

Details:

See P2182 (belt threshold frequency 1).

P2192[3]	**Time delay for belt failure**			**Min:** 0	Level
	CStat: CUT	**Datatype:** U16	**Unit:** s	**Def:** 10	**2**
	P-Group: ALARMS	**Active:** Immediately	**QuickComm.:** No	**Max:** 65	

P2192 defines a delay before warning/trip becomes active. It is used to eliminate events caused by transient conditions. It is used for both methods of fault detection.

Index:

P2192[0] : 1st. Drive data set (DDS)
P2192[1] : 2nd. Drive data set (DDS)
P2192[2] : 3rd. Drive data set (DDS)

r2197	**CO/BO: Monitoring word 1**			**Min:** -	Level
		Datatype: U16	**Unit:** -	**Def:** -	**2**
	P-Group: ALARMS			**Max:** -	

Monitoring word 1 which indicates the state of monitor functions. Each bit represents one monitor function.

Bitfields:

```
Bit00   f_act <=  P1080 (f_min)                  0  NO        1  YES
Bit01   f_act <=  P2155 (f_1)                    0  NO        1  YES
Bit02   f_act >   P2155 (f_1)                    0  NO        1  YES
Bit03   f_act >   zero                           0  NO        1  YES

Bit04   f_act >=  setp. (f_set)                  0  NO        1  YES
Bit05   f_act <=  P2167 (f_off)                  0  NO        1  YES
Bit06   f_act >=  P1082 (f_max)                  0  NO        1  YES
Bit07   f_act ==  setp. (f_set)                  0  NO        1  YES

Bit08   Act. current r0068 >  P2170              0  NO        1  YES
Bit09   Act. unfilt. Vdc   <  P2172              0  NO        1  YES
Bit10   Act. unfilt. Vdc   >  P2172              0  NO        1  YES
Bit11   Load missing                             0  NO        1  YES
```

r2198	**CO/BO: Monitoring word 2**			**Min:** -	Level
		Datatype: U16	**Unit:** -	**Def:** -	**2**
	P-Group: ALARMS			**Max:** -	

Monitoring word 2 which indicates the state of monitor functions. Each bit represents one monitor function.

Bitfields:

```
Bit00   |f_act| <= P2157 (f_2)                   0  NO        1  YES
Bit01   |f_act| >  P2157 (f_2)                   0  NO        1  YES
Bit02   |f_act| <= P2159 (f_3)                   0  NO        1  YES
Bit03   |f_act| >  P2159 (f_3)                   0  NO        1  YES

Bit04   |f_set| <  P2161 (f_min_set)             0  NO        1  YES
Bit05   f_set > 0                                0  NO        1  YES
Bit06   Motor blocked                            0  NO        1  YES
Bit07   Motor pulled out                         0  NO        1  YES

Bit08   | I_act r0068 | >  P2170                0  NO        1  YES
Bit09   | m_act | > P2174 & setpoint reached     0  NO        1  YES
Bit10   | m_act | > P2174                        0  NO        1  YES
Bit11   Belt failure warning                     0  NO        1  YES
Bit12   Belt failure trip                        0  NO        1  YES
```

3.37 Technology controller (PID controller)

P2200[3]	BI: Enable PID controller				Min: 0:0	Level
	CStat: CUT	Datatype: U32	Unit: -		Def: 0:0	2
	P-Group: TECH	Active: first confirm	QuickComm.: No		Max: 4000:0	

Allows user to enable/disable the PID controller.

P2200 settings:

0 : PID controller de-activated
1 : PID controller permanently activated
BICO parameters : PID controller event-controlled, de-activated/activated

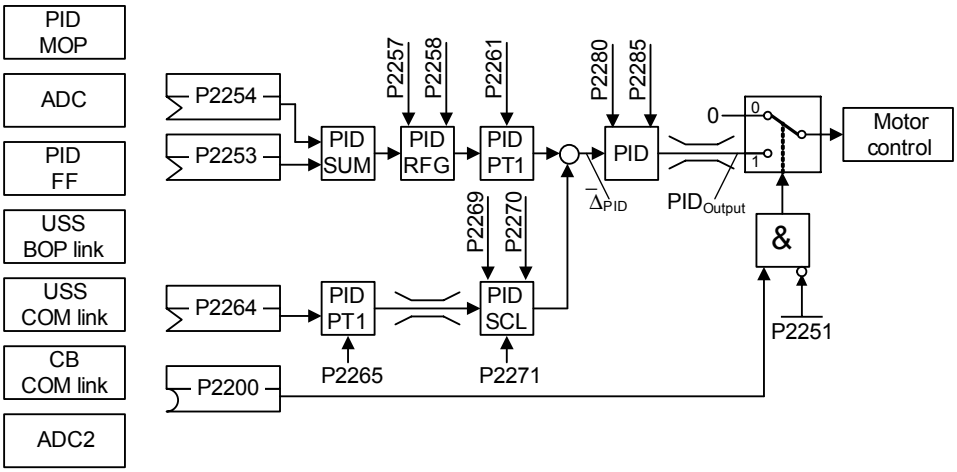

Index:

P2200[0] : 1st. Command data set (CDS)
P2200[1] : 2nd. Command data set (CDS)
P2200[2] : 3rd. Command data set (CDS)

Common Settings:

Parameter	Parameter text	Setting	Meaning
P2200	BI: Enable PID controller	0	PID controller de-activated
		1.0	PID controller always active
		722.x	Digital input x
		BICO	BICO parameter
P2251	PID mode	0	PID as setpoint
P2253	CI: PID setpoint	2224	Fixed PID setpoint (PID-FF)
		2250	PID-MOP
		755.0	Analog input 1
		2015.1	USS on BOP link
		2019.1	USS on COM link
		2050.1	CB on COM link
P2264	CI: PID feedback	755.0	Analog input 1
		755.1	Analog input 2

Dependency:

Setting 1 automatically disables normal ramp times set in P1120 and P1121 and the normal frequency setpoints.

Following an OFF1 or OFF3 command, however, the inverter frequency will ramp down to zero using the ramp time set in P1121 (P1135 for OFF3).

Note:

The PID setpoint source is selected using P2253. The PID setpoint and the PID feedback signal are interpreted as [%] values (not [Hz]). The output of the PID controller is displayed as [%] and then normalized into [Hz] through P2000 (reference frequency) when PID is enabled.

In level 3, the PID controller source enable can also come from the digital inputs in settings 722.0 to 722.5 for DIN1 to DIN6 or from any other BiCo source.

The minimum and maximum motor frequencies (P1080 and P1082) as well as the skip frequencies (P1091 to P1094) remain active on the inverter output. However, enabling skip frequencies with PID control can produce instabilities.

P2201[3]	**Fixed PID setpoint 1**			**Min:** -200.00	Level
	CStat: CUT	**Datatype:** Float	**Unit:** %	**Def:** 0.00	**2**
	P-Group: TECH	**Active:** Immediately	**QuickComm.:** No	**Max:** 200.00	

Defines Fixed PID Setpoint 1

There are three options available for selection of the PID fixed setpoints:
1. Direct selection
2. Direct selection + ON command
3. Binary coded selection + ON command

1. Direct selection (P0701 - P0706 = 15):
   - In this mode of operation, 1 digital input selects one PID fixed setpoint.
   - If several inputs are active together, the selected setpoints are summed.
   - E.g.: PID-FF1 + PID-FF2 + PID-FF3 + PID-FF4 + PID-FF5 + PID-FF6.

2. Direct selection + ON command (P0701 - P0706 = 16):
   - In this mode of operation the PID fixed setpoints are combined with an ON command.
   - Description as for 1), except that this type of selection issues an ON command concurrent with any setpoint selection.
   - If several inputs are active together, the selected setpoints are summed.
   - E.g.: PID-FF1 + PID-FF2 + PID-FF3 + PID-FF4 + PID-FF5 + PID-FF6.

3. Binary coded selection + ON command (P0701 - P0706 = 17):
   - Using this method to select the fixed PID setpoint (FF-PID) allows you to choose up to 16 different PID setpoints.
   - The setpoints are selected according to the following table:

Index:

P2201[0] : 1st. Drive data set (DDS)
P2201[1] : 2nd. Drive data set (DDS)
P2201[2] : 3rd. Drive data set (DDS)

Example:

Binary coded selection :

		DIN4	DIN3	DIN2	DIN1
0 %	PID - FF0	0	0	0	0
P1001	PID - FF1	0	0	0	**1**
P1002	PID - FF2	0	0	**1**	0
P1003	PID - FF3	0	0	**1**	**1**
P1004	PID - FF4	0	**1**	0	0
P1005	PID - FF5	0	**1**	0	**1**
P1006	PID - FF6	0	**1**	**1**	0
P1007	PID - FF7	0	**1**	**1**	**1**
P1008	PID - FF8	**1**	0	0	0
P1009	PID - FF9	**1**	0	0	**1**
P1010	PID - FF10	**1**	0	**1**	0
P1011	PID - FF11	**1**	0	**1**	**1**
P1012	PID - FF12	**1**	**1**	0	0
P1013	PID - FF13	**1**	**1**	0	**1**
P1014	PID - FF14	**1**	**1**	**1**	0
P1015	PID - FF15	**1**	**1**	**1**	**1**

Direct selection of PID-FF1 P2201 via DIN 1:

P0701 = 15
or
P0701 = 99, P2220 = 722.0, P2216 = 1

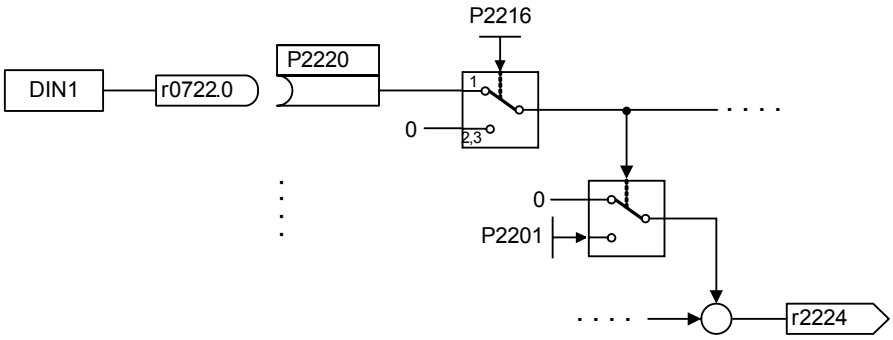

Dependency:
P2200 = 1 required in user access level 2 to enable setpoint source.

Note:
You may mix different types of frequencies; however, remember that they will be summed if selected together.

P2201 = 100 % corresponds to 4000 hex

P2202[3]	**Fixed PID setpoint 2**			**Min:** -200.00	Level
	CStat: CUT	**Datatype:** Float	**Unit:** %	**Def:** 10.00	**2**
	P-Group: TECH	**Active:** Immediately	**QuickComm.:** No	**Max:** 200.00	

Defines Fixed PID Setpoint 2

Index:
P2202[0] : 1st. Drive data set (DDS)
P2202[1] : 2nd. Drive data set (DDS)
P2202[2] : 3rd. Drive data set (DDS)

Details:
See P2201 (Fixed PID Setpoint 1).

P2203[3]	**Fixed PID setpoint 3**			**Min:** -200.00	Level
	CStat: CUT	**Datatype:** Float	**Unit:** %	**Def:** 20.00	**2**
	P-Group: TECH	**Active:** Immediately	**QuickComm.:** No	**Max:** 200.00	

Defines Fixed PID Setpoint 3

Index:
P2203[0] : 1st. Drive data set (DDS)
P2203[1] : 2nd. Drive data set (DDS)
P2203[2] : 3rd. Drive data set (DDS)

Details:
See P2201 fixed PID setpoint 1 (FF-PID 1).

P2204[3]	**Fixed PID setpoint 4**			**Min:** -200.00	Level
	CStat: CUT	**Datatype:** Float	**Unit:** %	**Def:** 30.00	**2**
	P-Group: TECH	**Active:** Immediately	**QuickComm.:** No	**Max:** 200.00	

Defines Fixed PID Setpoint 4

Index:
P2204[0] : 1st. Drive data set (DDS)
P2204[1] : 2nd. Drive data set (DDS)
P2204[2] : 3rd. Drive data set (DDS)

Details:
See P2201 (Fixed PID Setpoint 1).

P2205[3]	**Fixed PID setpoint 5**			**Min:** -200.00	Level
	CStat: CUT	**Datatype:** Float	**Unit:** %	**Def:** 40.00	**2**
	P-Group: TECH	**Active:** Immediately	**QuickComm.:** No	**Max:** 200.00	

Defines Fixed PID Setpoint 5

Index:
P2205[0] : 1st. Drive data set (DDS)
P2205[1] : 2nd. Drive data set (DDS)
P2205[2] : 3rd. Drive data set (DDS)

Details:
See P2201 (Fixed PID Setpoint 1).

P2206[3]	**Fixed PID setpoint 6**			**Min:** -200.00	Level
	CStat: CUT	**Datatype:** Float	**Unit:** %	**Def:** 50.00	**2**
	P-Group: TECH	**Active:** Immediately	**QuickComm.:** No	**Max:** 200.00	

Defines Fixed PID Setpoint 6

Index:

P2206[0] : 1st. Drive data set (DDS)
P2206[1] : 2nd. Drive data set (DDS)
P2206[2] : 3rd. Drive data set (DDS)

Details:

See P2201 (Fixed PID Setpoint 1).

P2207[3]	**Fixed PID setpoint 7**			**Min:** -200.00	Level
	CStat: CUT	**Datatype:** Float	**Unit:** %	**Def:** 60.00	**2**
	P-Group: TECH	**Active:** Immediately	**QuickComm.:** No	**Max:** 200.00	

Defines Fixed PID Setpoint 7

Index:

P2207[0] : 1st. Drive data set (DDS)
P2207[1] : 2nd. Drive data set (DDS)
P2207[2] : 3rd. Drive data set (DDS)

Details:

See P2201 (Fixed PID Setpoint 1).

P2208[3]	**Fixed PID setpoint 8**			**Min:** -200.00	Level
	CStat: CUT	**Datatype:** Float	**Unit:** %	**Def:** 70.00	**2**
	P-Group: TECH	**Active:** Immediately	**QuickComm.:** No	**Max:** 200.00	

Defines Fixed PID Setpoint 8

Index:

P2208[0] : 1st. Drive data set (DDS)
P2208[1] : 2nd. Drive data set (DDS)
P2208[2] : 3rd. Drive data set (DDS)

Details:

See P2201 (Fixed PID Setpoint 1).

P2209[3]	**Fixed PID setpoint 9**			**Min:** -200.00	Level
	CStat: CUT	**Datatype:** Float	**Unit:** %	**Def:** 80.00	**2**
	P-Group: TECH	**Active:** Immediately	**QuickComm.:** No	**Max:** 200.00	

Defines Fixed PID Setpoint 9

Index:

P2209[0] : 1st. Drive data set (DDS)
P2209[1] : 2nd. Drive data set (DDS)
P2209[2] : 3rd. Drive data set (DDS)

Details:

See P2201 (Fixed PID Setpoint 1).

P2210[3]	**Fixed PID setpoint 10**			**Min:** -200.00	Level
	CStat: CUT	**Datatype:** Float	**Unit:** %	**Def:** 90.00	**2**
	P-Group: TECH	**Active:** Immediately	**QuickComm.:** No	**Max:** 200.00	

Defines Fixed PID Setpoint 10

Index:

P2210[0] : 1st. Drive data set (DDS)
P2210[1] : 2nd. Drive data set (DDS)
P2210[2] : 3rd. Drive data set (DDS)

Details:

See P2201 (Fixed PID Setpoint 1).

P2211[3]	**Fixed PID setpoint 11**			**Min:** -200.00	Level
	CStat: CUT	**Datatype:** Float	**Unit:** %	**Def:** 100.00	**2**
	P-Group: TECH	**Active:** Immediately	**QuickComm.:** No	**Max:** 200.00	

Defines Fixed PID Setpoint 11

Index:

P2211[0] : 1st. Drive data set (DDS)
P2211[1] : 2nd. Drive data set (DDS)
P2211[2] : 3rd. Drive data set (DDS)

Details:

See P2201 (Fixed PID Setpoint 1).

P2212[3]	Fixed PID setpoint 12			Min: -200.00	Level
	CStat: CUT	Datatype: Float	Unit: %	Def: 110.00	2
	P-Group: TECH	Active: Immediately	QuickComm.: No	Max: 200.00	

Defines Fixed PID Setpoint 12

Index:

P2212[0] : 1st. Drive data set (DDS)
P2212[1] : 2nd. Drive data set (DDS)
P2212[2] : 3rd. Drive data set (DDS)

Details:

See P2201 (Fixed PID Setpoint 1).

P2213[3]	Fixed PID setpoint 13			Min: -200.00	Level
	CStat: CUT	Datatype: Float	Unit: %	Def: 120.00	2
	P-Group: TECH	Active: Immediately	QuickComm.: No	Max: 200.00	

Defines Fixed PID Setpoint 13

Index:

P2213[0] : 1st. Drive data set (DDS)
P2213[1] : 2nd. Drive data set (DDS)
P2213[2] : 3rd. Drive data set (DDS)

Details:

See P2201 (Fixed PID Setpoint 1).

P2214[3]	Fixed PID setpoint 14			Min: -200.00	Level
	CStat: CUT	Datatype: Float	Unit: %	Def: 130.00	2
	P-Group: TECH	Active: Immediately	QuickComm.: No	Max: 200.00	

Defines Fixed PID Setpoint 14

Index:

P2214[0] : 1st. Drive data set (DDS)
P2214[1] : 2nd. Drive data set (DDS)
P2214[2] : 3rd. Drive data set (DDS)

Details:

See P2201 (Fixed PID Setpoint 1).

P2215[3]	Fixed PID setpoint 15			Min: -200.00	Level
	CStat: CUT	Datatype: Float	Unit: %	Def: 130.00	2
	P-Group: TECH	Active: Immediately	QuickComm.: No	Max: 200.00	

Defines Fixed PID Setpoint 15

Index:

P2215[0] : 1st. Drive data set (DDS)
P2215[1] : 2nd. Drive data set (DDS)
P2215[2] : 3rd. Drive data set (DDS)

Details:

See P2201 (Fixed PID Setpoint 1).

P2216[3]	Fixed PID setpoint mode - Bit 0			Min: 1	Level
	CStat: CT	Datatype: U16	Unit: -	Def: 1	3
	P-Group: TECH	Active: first confirm	QuickComm.: No	Max: 3	

Fixed frequencies for PID setpoint can be selected in three different modes. Parameter P2216 defines the mode of selection Bit 0.

Possible Settings:

1 Direct selection
2 Direct selection + ON command
3 Binary coded selection + ON command

Index:

P2216[0] : 1st. Command data set (CDS)
P2216[1] : 2nd. Command data set (CDS)
P2216[2] : 3rd. Command data set (CDS)

P2217[3]	Fixed PID setpoint mode - Bit 1			Min: 1	Level
	CStat: CT	Datatype: U16	Unit: -	Def: 1	3
	P-Group: TECH	Active: first confirm	QuickComm.: No	Max: 3	

BCD or direct selection Bit 1 for PID setpoint.

Possible Settings:

1 Direct selection
2 Direct selection + ON command
3 Binary coded selection + ON command

Index:

P2217[0] : 1st. Command data set (CDS)
P2217[1] : 2nd. Command data set (CDS)
P2217[2] : 3rd. Command data set (CDS)

P2218[3]	**Fixed PID setpoint mode - Bit 2**			**Min:** 1	Level
	CStat: CT	**Datatype:** U16	**Unit:** -	**Def:** 1	**3**
	P-Group: TECH	**Active:** first confirm	**QuickComm.:** No	**Max:** 3	

BCD or direct selection Bit 2 for PID setpoint.

Possible Settings:

1 Direct selection
2 Direct selection + ON command
3 Binary coded selection + ON command

Index:

P2218[0] : 1st. Command data set (CDS)
P2218[1] : 2nd. Command data set (CDS)
P2218[2] : 3rd. Command data set (CDS)

P2219[3]	**Fixed PID setpoint mode - Bit 3**			**Min:** 1	Level
	CStat: CT	**Datatype:** U16	**Unit:** -	**Def:** 1	**3**
	P-Group: TECH	**Active:** first confirm	**QuickComm.:** No	**Max:** 3	

BCD or direct selection Bit 3 for PID setpoint.

Possible Settings:

1 Direct selection
2 Direct selection + ON command
3 Binary coded selection + ON command

Index:

P2219[0] : 1st. Command data set (CDS)
P2219[1] : 2nd. Command data set (CDS)
P2219[2] : 3rd. Command data set (CDS)

P2220[3]	**BI: Fixed PID setp. select Bit 0**			**Min:** 0:0	Level
	CStat: CT	**Datatype:** U32	**Unit:** -	**Def:** 0:0	**3**
	P-Group: COMMANDS	**Active:** first confirm	**QuickComm.:** No	**Max:** 4000:0	

Defines command source of fixed PID setpoint selection Bit 0

Index:

P2220[0] : 1st. Command data set (CDS)
P2220[1] : 2nd. Command data set (CDS)
P2220[2] : 3rd. Command data set (CDS)

Common Settings:

722.0 = Digital input 1 (requires P0701 to be set to 99, BICO)
722.1 = Digital input 2 (requires P0702 to be set to 99, BICO)
722.2 = Digital input 3 (requires P0703 to be set to 99, BICO)
722.3 = Digital input 4 (requires P0704 to be set to 99, BICO)
722.4 = Digital input 5 (requires P0705 to be set to 99, BICO)
722.5 = Digital input 6 (requires P0706 to be set to 99, BICO)
722.6 = Digital input 7 (via analog input 1, requires P0707 to be set to 99)
722.7 = Digital input 8 (via analog input 2, requires P0708 to be set to 99)

P2221[3]	**BI: Fixed PID setp. select Bit 1**			**Min:** 0:0	Level
	CStat: CT	**Datatype:** U32	**Unit:** -	**Def:** 0:0	**3**
	P-Group: COMMANDS	**Active:** first confirm	**QuickComm.:** No	**Max:** 4000:0	

Defines command source of fixed PID setpoint selection Bit 1.

Index:

P2221[0] : 1st. Command data set (CDS)
P2221[1] : 2nd. Command data set (CDS)
P2221[2] : 3rd. Command data set (CDS)

Common Settings:

722.0 = Digital input 1 (requires P0701 to be set to 99, BICO)
722.1 = Digital input 2 (requires P0702 to be set to 99, BICO)
722.2 = Digital input 3 (requires P0703 to be set to 99, BICO)
722.3 = Digital input 4 (requires P0704 to be set to 99, BICO)
722.4 = Digital input 5 (requires P0705 to be set to 99, BICO)
722.5 = Digital input 6 (requires P0706 to be set to 99, BICO)

P2222[3]	**BI: Fixed PID setp. select Bit 2**			**Min:** 0:0	Level
	CStat: CT	**Datatype:** U32	**Unit:** -	**Def:** 0:0	**3**
	P-Group: COMMANDS	**Active:** first confirm	**QuickComm.:** No	**Max:** 4000:0	

Defines command source of fixed PID setpoint selection Bit 2

Index:

P2222[0] : 1st. Command data set (CDS)
P2222[1] : 2nd. Command data set (CDS)
P2222[2] : 3rd. Command data set (CDS)

Common Settings:

722.0 = Digital input 1 (requires P0701 to be set to 99, BICO)
722.1 = Digital input 2 (requires P0702 to be set to 99, BICO)
722.2 = Digital input 3 (requires P0703 to be set to 99, BICO)
722.3 = Digital input 4 (requires P0704 to be set to 99, BICO)
722.4 = Digital input 5 (requires P0705 to be set to 99, BICO)
722.5 = Digital input 6 (requires P0706 to be set to 99, BICO)

P2223[3]	**BI: Fixed PID setp. select Bit 3**			**Min:** 0:0	Level
	CStat: CT	**Datatype:** U32	**Unit:** -	**Def:** 722:3	**3**
	P-Group: COMMANDS	**Active:** first confirm	**QuickComm.:** No	**Max:** 4000:0	

Defines command source of fixed PID setpoint selection Bit 3

Index:

P2223[0] : 1st. Command data set (CDS)
P2223[1] : 2nd. Command data set (CDS)
P2223[2] : 3rd. Command data set (CDS)

Common Settings:

722.0 = Digital input 1 (requires P0701 to be set to 99, BICO)
722.1 = Digital input 2 (requires P0702 to be set to 99, BICO)
722.2 = Digital input 3 (requires P0703 to be set to 99, BICO)
722.3 = Digital input 4 (requires P0704 to be set to 99, BICO)
722.4 = Digital input 5 (requires P0705 to be set to 99, BICO)
722.5 = Digital input 6 (requires P0706 to be set to 99, BICO)

r2224	**CO: Act. fixed PID setpoint**			**Min:** -	Level
		Datatype: Float	**Unit:** %	**Def:** -	**2**
	P-Group: TECH			**Max:** -	

Displays total output of PID fixed setpoint selection.

Note:

r2224 = 100 % corresponds to 4000 hex

P2225[3]	**Fixed PID setpoint mode - Bit 4**			**Min:** 1	Level
	CStat: CT	**Datatype:** U16	**Unit:** -	**Def:** 1	**3**
	P-Group: TECH	**Active:** first confirm	**QuickComm.:** No	**Max:** 2	

Direct selection or direct selection + ON Bit 4 for PID setpoint.

Possible Settings:

1 Direct selection
2 Direct selection + ON command

Index:

P2225[0] : 1st. Command data set (CDS)
P2225[1] : 2nd. Command data set (CDS)
P2225[2] : 3rd. Command data set (CDS)

P2226[3]	**BI: Fixed PID setp. select Bit 4**			**Min:** 0:0	Level
	CStat: CT	**Datatype:** U32	**Unit:** -	**Def:** 722:4	**3**
	P-Group: COMMANDS	**Active:** first confirm	**QuickComm.:** No	**Max:** 4000:0	

Defines command source of fixed PID setpoint selection Bit 4

Index:

P2226[0] : 1st. Command data set (CDS)
P2226[1] : 2nd. Command data set (CDS)
P2226[2] : 3rd. Command data set (CDS)

Common Settings:

722.0 = Digital input 1 (requires P0701 to be set to 99, BICO)
722.1 = Digital input 2 (requires P0702 to be set to 99, BICO)
722.2 = Digital input 3 (requires P0703 to be set to 99, BICO)
722.3 = Digital input 4 (requires P0704 to be set to 99, BICO)
722.4 = Digital input 5 (requires P0705 to be set to 99, BICO)
722.5 = Digital input 6 (requires P0706 to be set to 99, BICO)

P2227[3]	Fixed PID setpoint mode - Bit 5			Min: 1	Level
	CStat: CT	Datatype: U16	Unit: -	Def: 1	3
	P-Group: TECH	Active: first confirm	QuickComm.: No	Max: 2	

Direct selection / direct selection + ON Bit 5 for PID setpoint.

Possible Settings:

1 Direct selection
2 Direct selection + ON command

Index:

P2227[0] : 1st. Command data set (CDS)
P2227[1] : 2nd. Command data set (CDS)
P2227[2] : 3rd. Command data set (CDS)

P2228[3]	BI: Fixed PID setp. select Bit 5			Min: 0:0	Level
	CStat: CT	Datatype: U32	Unit: -	Def: 722:5	3
	P-Group: COMMANDS	Active: first confirm	QuickComm.: No	Max: 4000:0	

Defines command source of fixed PID setpoint selection Bit 5

Index:

P2228[0] : 1st. Command data set (CDS)
P2228[1] : 2nd. Command data set (CDS)
P2228[2] : 3rd. Command data set (CDS)

Common Settings:

722.0 = Digital input 1 (requires P0701 to be set to 99, BICO)
722.1 = Digital input 2 (requires P0702 to be set to 99, BICO)
722.2 = Digital input 3 (requires P0703 to be set to 99, BICO)
722.3 = Digital input 4 (requires P0704 to be set to 99, BICO)
722.4 = Digital input 5 (requires P0705 to be set to 99, BICO)
722.5 = Digital input 6 (requires P0706 to be set to 99, BICO)

P2231[3]	Setpoint memory of PID-MOP			Min: 0	Level
	CStat: CUT	Datatype: U16	Unit: -	Def: 0	2
	P-Group: TECH	Active: Immediately	QuickComm.: No	Max: 1	

Setpoint memory

Possible Settings:

0 PID-MOP setpoint will not be stored
1 PID-MOP setpoint will be stored (P2240 is updated)

Index:

P2231[0] : 1st. Drive data set (DDS)
P2231[1] : 2nd. Drive data set (DDS)
P2231[2] : 3rd. Drive data set (DDS)

Dependency:

If 0 selected, setpoint returns to value set in P2240 (setpoint of PID-MOP) after an OFF command.

If 1 is selected, active setpoint is "remembered" and P2240 updated with current value.

Details:

See P2240 (setpoint of PID-MOP)

P2232	Inhibit neg. PID-MOP setpoints			Min: 0	Level
	CStat: CT	Datatype: U16	Unit: -	Def: 1	2
	P-Group: TECH	Active: first confirm	QuickComm.: No	Max: 1	

This parameter suppresses negative setpoints of the PID-MOP output r2250.

Possible Settings:

0 Neg. PID-MOP setpoint is allowed
1 Neg. PID-MOP setpoint inhibited

Note:

Setting 0 enables a change of motor direction using the motor potentiometer setpoint (increase/decrease frequency either by using digital inputs or motor potentiometer up/down buttons.

P2235[3]	**BI: Enable PID-MOP (UP-cmd)**			**Min:** 0:0	Level
	CStat: CT	**Datatype:** U32	**Unit:** -	**Def:** 19:13	**3**
	P-Group: COMMANDS	**Active:** first confirm	**QuickComm.:** No	**Max:** 4000:0	

Defines source of UP command.

Index:

P2235[0] : 1st. Command data set (CDS)
P2235[1] : 2nd. Command data set (CDS)
P2235[2] : 3rd. Command data set (CDS)

Common Settings:

722.0 = Digital input 1 (requires P0701 to be set to 99, BICO)
722.1 = Digital input 2 (requires P0702 to be set to 99, BICO)
722.2 = Digital input 3 (requires P0703 to be set to 99, BICO)
722.3 = Digital input 4 (requires P0704 to be set to 99, BICO)
722.4 = Digital input 5 (requires P0705 to be set to 99, BICO)
722.5 = Digital input 6 (requires P0706 to be set to 99, BICO)
19.D = Keypad UP button

Dependency:

To change setpoint:
1. Use UP / DOWN key on BOP or
2. Set P0702/P0703 = 13/14 (function of digital inputs 2 and 3)

P2236[3]	**BI: Enable PID-MOP (DOWN-cmd)**			**Min:** 0:0	Level
	CStat: CT	**Datatype:** U32	**Unit:** -	**Def:** 19:14	**3**
	P-Group: COMMANDS	**Active:** first confirm	**QuickComm.:** No	**Max:** 4000:0	

Defines source of DOWN command.

Index:

P2236[0] : 1st. Command data set (CDS)
P2236[1] : 2nd. Command data set (CDS)
P2236[2] : 3rd. Command data set (CDS)

Common Settings:

722.0 = Digital input 1 (requires P0701 to be set to 99, BICO)
722.1 = Digital input 2 (requires P0702 to be set to 99, BICO)
722.2 = Digital input 3 (requires P0703 to be set to 99, BICO)
722.3 = Digital input 4 (requires P0704 to be set to 99, BICO)
722.4 = Digital input 5 (requires P0705 to be set to 99, BICO)
722.5 = Digital input 6 (requires P0706 to be set to 99, BICO)
722.6 = Digital input 7 (via analog input 1, requires P0707 to be set to 99)
722.7 = Digital input 8 (via analog input 2, requires P0708 to be set to 99)
19.E = Keypad DOWN button

Dependency:

To change setpoint:
1. Use UP / DOWN key on BOP or
2. Set P0702/P0703 = 13/14 (function of digital inputs 2 and 3)

P2240[3]	**Setpoint of PID-MOP**			**Min:** -200.00	Level
	CStat: CUT	**Datatype:** Float	**Unit:** %	**Def:** 10.00	**2**
	P-Group: TECH	**Active:** Immediately	**QuickComm.:** No	**Max:** 200.00	

Setpoint of the motor potentiometer.

Allows user to set a digital PID setpoint in [%].

Index:

P2240[0] : 1st. Drive data set (DDS)
P2240[1] : 2nd. Drive data set (DDS)
P2240[2] : 3rd. Drive data set (DDS)

Note:

P2240 = 100 % corresponds to 4000 hex

r2250	CO: Output setpoint of PID-MOP			Min: -	Level
		Datatype: Float	Unit: %	Def: -	2
	P-Group: TECH			Max: -	

Displays output setpoint of motor potentiometer in [%].

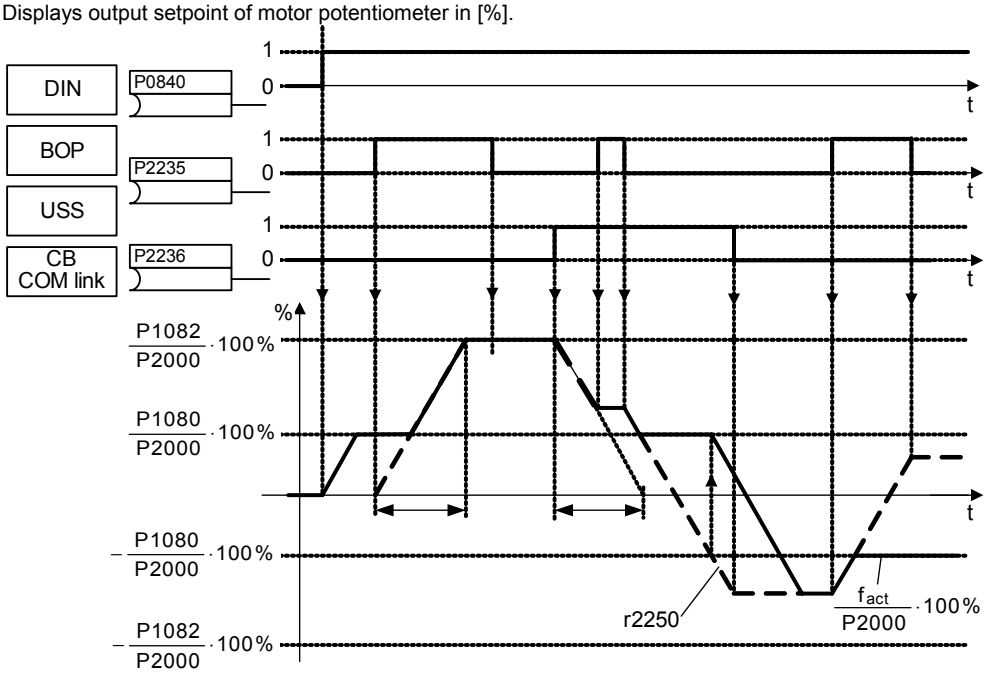

Note:

r2250 = 100 % corresponds to 4000 hex

P2251	PID mode			Min: 0	Level
	CStat: CT	Datatype: U16	Unit: -	Def: 0	3
	P-Group: TECH	Active: Immediately	QuickComm.: No	Max: 1	

Configuration of PID controller.

Possible Settings:

0 PID as setpoint
1 PID as trim

Common Settings:

In addition to the open-loop/closed-loop control of a three-phase motor (standard applications for a drive inverter), MICROMASTER has a technological controller that can be used to control (closed-loop) process quantities such as pressure, filling level or control a winder. These applications and the closed-loop control structures required to implement these are shown in the following diagram.

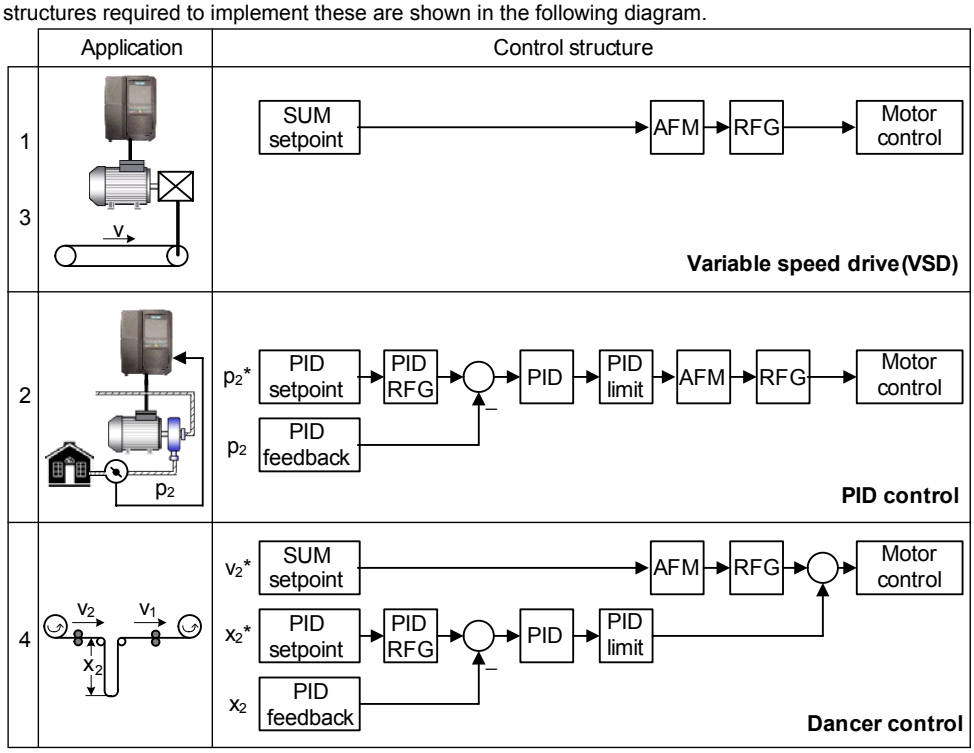

These structures are selected using parameters P2200 and P2251 (refer to the following table).

		Setpoint via SUM	Setpoint via PID controller	RFG	PID-RFG
1	**P2200 = 0:0 [2]** **P2251 = 0**	VSD	–	ON: active OFF1/3: active	ON: - OFF1/3: -
2	**P2200 = 1:0 [2]** **P2251 = 0**	–	PID control	ON: - OFF1/3: active	ON: active OFF1/3: -
3	**P2200 = 0:0 [1]** **P2251 = 1**	VSD	–	ON: active OFF1/3: active	ON: - OFF1/3: -
4	**P2200 = 1:0 [1]** **P2251 = 1**	Dancer control		ON: active OFF1/3: active	ON: active OFF1/3: active

1) will take change with drive running
2) change only taken when drive stopped

Closed-loop dancer roll control is selected with P2251 = P2200 = 1. Important parameters and the structure are shown in the following diagrams.

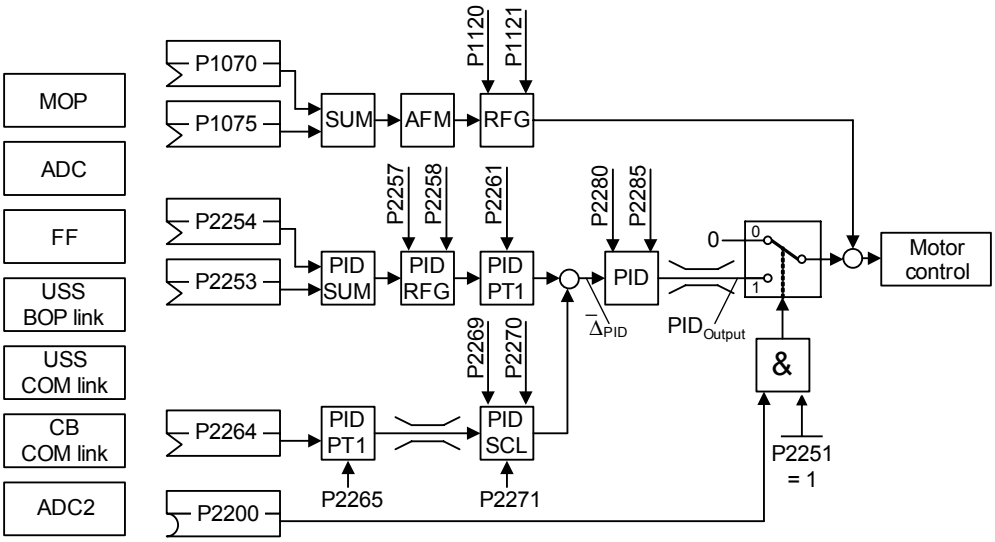

Parameter	Parameter text	Setting	Meaning
P1070	CI: Main setpoint	1024	Fixed setpoint (FF)
		1050	MOP
		755.0	Analog input 1
		2015.1	USS on BOP link
		2019.1	USS on COM link
		2050.1	CB on COM link
P2200	BI: Enable PID controller	0	PID controller de-activated
		1.0	PID controller always active
		722.x	Digital input x
		BICO	BICO parameter
P2251	PID mode	1	PID as trim
P2253	CI: PID setpoint	1024	Fixed setpoint (FF)
		1050	MOP
		755.0	Analog input 1
		2015.1	USS on BOP link
		2019.1	USS on COM link
		2050.1	CB on COM link
P2264	CI: PID feedback	755.0	Analog input 1
		755.1	Analog input 2

Dependency:

Active when PID loop is enabled (see P2200).

P2253[3]	**CI: PID setpoint**			**Min:** 0:0	Level
	CStat: CUT	**Datatype:** U32	**Unit:** -	**Def:** 0:0	**2**
	P-Group: TECH	**Active:** first confirm	**QuickComm.:** No	**Max:** 4000:0	

Defines setpoint source for PID setpoint input.

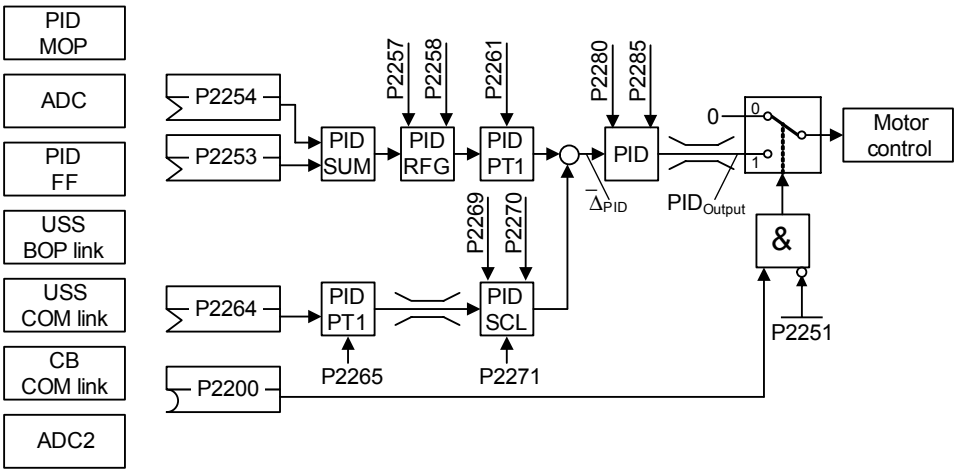

Index:

P2253[0] : 1st. Command data set (CDS)
P2253[1] : 2nd. Command data set (CDS)
P2253[2] : 3rd. Command data set (CDS)

Common Settings:

Parameter	Parameter text	Setting	Meaning
P2200	BI: Enable PID controller	0	PID controller de-activated
		1.0	PID controller always active
		722.x	Digital input x
		BICO	BICO parameter
P2251	PID mode	0	PID as setpoint
P2253	CI: PID setpoint	2224	Fixed PID setpoint (PID-FF)
		2250	PID-MOP
		755.0	Analog input 1
		2015.1	USS on BOP link
		2019.1	USS on COM link
		2050.1	CB on COM link
P2264	CI: PID feedback	755.0	Analog input 1
		755.1	Analog input 2

P2254[3]	**CI: PID trim source**			**Min:** 0:0	Level
	CStat: CUT	**Datatype:** U32	**Unit:** -	**Def:** 0:0	**3**
	P-Group: TECH	**Active:** first confirm	**QuickComm.:** No	**Max:** 4000:0	

Selects trim source for PID setpoint. This signal is multiplied by the trim gain and added to the PID setpoint.

Index:

P2254[0] : 1st. Command data set (CDS)
P2254[1] : 2nd. Command data set (CDS)
P2254[2] : 3rd. Command data set (CDS)

Common Settings:

See parameter P2253

P2255	**PID setpoint gain factor**			**Min:** 0.00	Level
	CStat: CUT	**Datatype:** Float	**Unit:** -	**Def:** 100.00	**3**
	P-Group: TECH	**Active:** Immediately	**QuickComm.:** No	**Max:** 100.00	

Gain factor for PID setpoint. The PID setpoint input is multiplied by this gain factor to produce a suitable ratio between setpoint and trim.

P2256	**PID trim gain factor**			**Min:** 0.00	Level
	CStat: CUT	**Datatype:** Float	**Unit:** -	**Def:** 100.00	**3**
	P-Group: TECH	**Active:** Immediately	**QuickComm.:** No	**Max:** 100.00	

Gain factor for PID trim. This gain factor scales the trim signal, which is added to the main PID setpoint.

P2257	**Ramp-up time for PID setpoint**			**Min:** 0.00	Level
	CStat: CUT	**Datatype:** Float	**Unit:** s	**Def:** 1.00	**2**
	P-Group: TECH	**Active:** Immediately	**QuickComm.:** No	**Max:** 650.00	

Sets the ramp-up time for the PID setpoint.

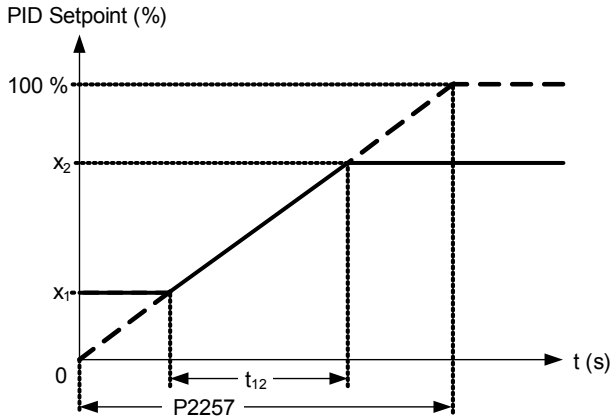

$$t_{12} = \frac{|x_2 - x_1|}{100\%} \cdot P2257$$

Dependency:

P2200 = 1 (PID control is enabled) disables normal ramp-up time (P1120).

PID ramp time effective only on PID setpoint and only active
- when PID setpoint is changed or
- when RUN command is given.

Notice:

Setting the ramp-up time too short may cause the inverter to trip, on overcurrent for example.

P2258	**Ramp-down time for PID setpoint**			**Min:** 0.00	Level
	CStat: CUT	**Datatype:** Float	**Unit:** s	**Def:** 1.00	**2**
	P-Group: TECH	**Active:** Immediately	**QuickComm.:** No	**Max:** 650.00	

Sets ramp-down time for PID setpoint.

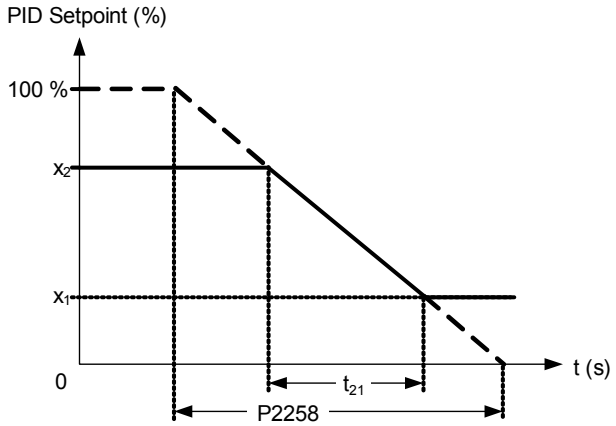

$$t_{21} = \frac{|x_1 - x_2|}{100\%} \cdot P2258$$

Dependency:
- P2200 = 1 (PID control is enabled) disables normal ramp-up time (P1120).
- PID setpoint ramp effective only on PID setpoint changes.
- P1121 (ramp-down time) and P1135 (OFF3 ramp-down time) define the ramp times used after OFF1 and OFF3 respectively.

Notice:

Setting the ramp-down time too short can cause the inverter to trip on overvoltage (F0002) / overcurrent (F0001).

r2260	**CO: PID setpoint after PID-RFG**			**Min:** -	Level
		Datatype: Float	**Unit:** %	**Def:** -	**2**
	P-Group: TECH			**Max:** -	

Displays total active PID setpoint after PID-RFG in [%].

Note:

r2260 = 100 % corresponds to 4000 hex

P2261	PID setpoint filter timeconstant			Min: 0.00	Level 3
	CStat: CUT	Datatype: Float	Unit: s	Def: 0.00	
	P-Group: TECH	Active: Immediately	QuickComm.: No	Max: 60.00	

Sets a time constant for smoothing the PID setpoint.

Note:

0 = no smoothing

r2262	CO: Filtered PID setp. after RFG			Min: -	Level 3
		Datatype: Float	Unit: %	Def: -	
	P-Group: TECH			Max: -	

Displays the filtered PID setpoint after the PID ramp-function generator (PID_HLG) as percentage. Parameter r2262 is obtained from the filtered parameter r2260 that is filtered using the PT1 filter with time constant P2261.

Note:

r2262 = 100 % corresponds to 4000 hex

P2263	PID controller type			Min: 0	Level 3
	CStat: CT	Datatype: U16	Unit: -	Def: 0	
	P-Group: TECH	Active: Immediately	QuickComm.: No	Max: 1	

Sets the PID controller type.

Possible Settings:

0 D component on feedback signal
1 D component on error signal

P2264[3]	CI: PID feedback			Min: 0:0	Level 2
	CStat: CUT	Datatype: U32	Unit: -	Def: 755:0	
	P-Group: TECH	Active: first confirm	QuickComm.: No	Max: 4000:0	

Selects the source of the PID feedback signal.

Index:

P2264[0] : 1st. Command data set (CDS)
P2264[1] : 2nd. Command data set (CDS)
P2264[2] : 3rd. Command data set (CDS)

Common Settings:

Parameter	Parameter text	Setting	Meaning
P2200	BI: Enable PID controller	0	PID controller de-activated
		1.0	PID controller always active
		722.x	Digital input x
		BICO	BICO parameter
P2251	PID mode	0	PID as setpoint
P2253	CI: PID setpoint	2224	Fixed PID setpoint (PID-FF)
		2250	PID-MOP
		755.0	Analog input 1
		2015.1	USS on BOP link
		2019.1	USS on COM link
		2050.1	CB on COM link
P2264	CI: PID feedback	755.0	Analog input 1
		755.1	Analog input 2

Note:

When analog input is selected, offset and gain can be implemented using parameters P0756 to P0760 (ADC scaling).

P2265	PID feedback filter timeconstant			Min: 0.00	Level 2
	CStat: CUT	Datatype: Float	Unit: s	Def: 0.00	
	P-Group: TECH	Active: Immediately	QuickComm.: No	Max: 60.00	

Defines time constant for PID feedback filter.

r2266	CO: PID filtered feedback			Min: -	Level 2
		Datatype: Float	Unit: %	Def: -	
	P-Group: TECH			Max: -	

Displays PID feedback signal in [%].

Note:

r2266 = 100 % corresponds to 4000 hex

P2267	**Max. value for PID feedback**			**Min:** -200.00	Level
	CStat: CUT	**Datatype:** Float	**Unit:** %	**Def:** 100.00	**3**
	P-Group: TECH	**Active:** Immediately	**QuickComm.:** No	**Max:** 200.00	

Sets the upper limit for the value of the feedback signal in [%].

Note:

- P2267 = 100 % corresponds to 4000 hex
- When PID is enabled (P2200 = 1) and the signal rises above this value, the inverter will trip with F0222 .

P2268	**Min. value for PID feedback**			**Min:** -200.00	Level
	CStat: CUT	**Datatype:** Float	**Unit:** %	**Def:** 0.00	**3**
	P-Group: TECH	**Active:** Immediately	**QuickComm.:** No	**Max:** 200.00	

Sets lower limit for value of feedback signal in [%].

Note:

- P2268 = 100 % corresponds to 4000 hex
- When PID is enabled (P2200 = 1) and the signal rises below this value, the inverter will trip with F0221.

P2269	**Gain applied to PID feedback**			**Min:** 0.00	Level
	CStat: CUT	**Datatype:** Float	**Unit:** -	**Def:** 100.00	**3**
	P-Group: TECH	**Active:** Immediately	**QuickComm.:** No	**Max:** 500.00	

Allows the user to scale the PID feedback as a percentage value [%].

A gain of 100.0 % means that feedback signal has not changed from its default value.

P2270	**PID feedback function selector**			**Min:** 0	Level
	CStat: CUT	**Datatype:** U16	**Unit:** -	**Def:** 0	**3**
	P-Group: TECH	**Active:** Immediately	**QuickComm.:** No	**Max:** 3	

Applies mathematical functions to the PID feedback signal, allowing multiplication of the result by P2269 (gain applied to PID feedback).

Possible Settings:

0 Disabled
1 Square root (root(x))
2 Square (x*x)
3 Cube (x*x*x)

P2271	**PID transducer type**			**Min:** 0	Level
	CStat: CUT	**Datatype:** U16	**Unit:** -	**Def:** 0	**2**
	P-Group: TECH	**Active:** Immediately	**QuickComm.:** No	**Max:** 1	

Allows the user to select the transducer type for the PID feedback signal.

Possible Settings:

0 Disabled
1 Inversion of PID feedback signal

Notice:

It is essential that you select the correct tranducer type.

If you are unsure whether 0 or 1 is applicable, you can determine the correct type as follows:

1. Disable the PID function (P2200 = 0).
2. Increase the motor frequency while measuring the feedback signal.
3. If the feedback signal increases with an increase in motor frequency, the PID transducer type should be 0.
4. If the feedback signal decreases with an increase in motor frequency the PID transducer type should be set to 1.

r2272	**CO: PID scaled feedback**			**Min:** -	Level
		Datatype: Float	**Unit:** %	**Def:** -	**2**
	P-Group: TECH			**Max:** -	

Displays PID scaled feedback signal in [%].

Note:

r2272 = 100 % corresponds to 4000 hex

r2273	**CO: PID error**			**Min:** -	Level
		Datatype: Float	**Unit:** %	**Def:** -	**2**
	P-Group: TECH			**Max:** -	

Displays PID error (difference) signal between setpoint and feedback signals in [%].

Note:

r2273 = 100 % corresponds to 4000 hex

P2274	**PID derivative time**			**Min:** 0.000	Level
	CStat: CUT	**Datatype:** Float	**Unit:** s	**Def:** 0.000	**2**
	P-Group: TECH	**Active:** Immediately	**QuickComm.:** No	**Max:** 60.000	

Sets PID derivative time.

P2274 = 0:
The derivative term does not have any effect (it applies a gain of 1).

P2280	**PID proportional gain**			**Min:** 0.000	Level
	CStat: CUT	**Datatype:** Float	**Unit:** -	**Def:** 3.000	**2**
	P-Group: TECH	**Active:** Immediately	**QuickComm.:** No	**Max:** 65.000	

Allows user to set proportional gain for PID controller.

The PID controller is implemented using the standard model.

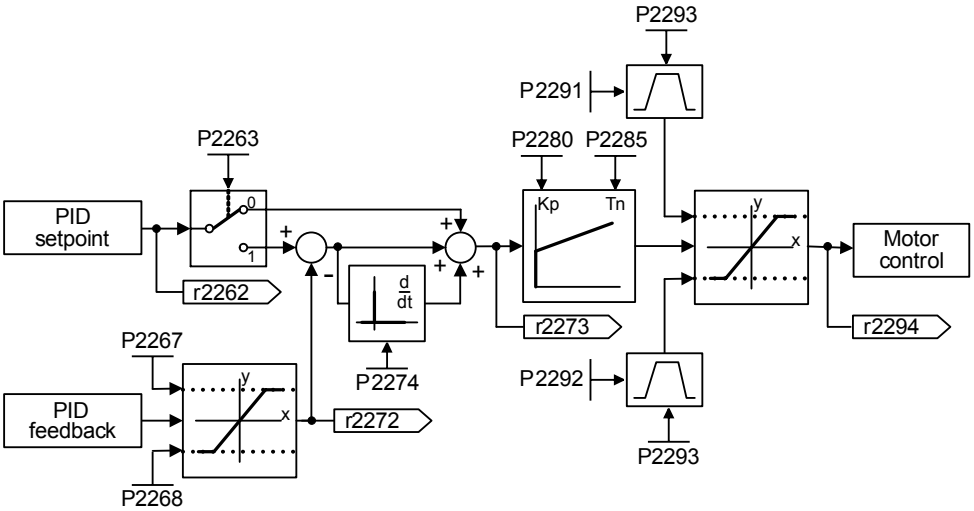

For best results, enable both P and I terms.

Dependency:

P2280 = 0 (P term of PID = 0):
I term acts on the square of the error signal.

P2285 = 0 (I term of PID = 0):
PID controller acts as a P or PD controller respectively.

Note:

- If the system is prone to sudden step changes in the feedback signal, P term should normally be set to a small value (0.5) with a faster I term for optimum performance.

- The D term (P2274) multiplies the difference between the present and previous feedback signal thus accelerating the controller reaction to an error that appears suddenly.
- The D term should be used carefully, since it can cause the controller output to fluctuate as every change in the feedback signal is amplified by the controller derivative action.

P2285	**PID integral time**			**Min:** 0.000	Level
	CStat: CUT	**Datatype:** Float	**Unit:** s	**Def:** 0.000	**2**
	P-Group: TECH	**Active:** Immediately	**QuickComm.:** No	**Max:** 60.000	

Sets integral time constant for PID controller.

Details:

See P2280 (PID proportional gain).

P2291	**PID output upper limit**			**Min:** -200.00	Level
	CStat: CUT	**Datatype:** Float	**Unit:** %	**Def:** 100.00	**2**
	P-Group: TECH	**Active:** Immediately	**QuickComm.:** No	**Max:** 200.00	

Sets upper limit for PID controller output in [%].

Dependency:

If F max (P1082) is greater than P2000 (reference frequency), either P2000 or P2291 (PID output upper limit) must be changed to achieve F max.

Note:

P2291 = 100 % corresponds to 4000 hex (as defined by P2000 (reference frequency)).

P2292	**PID output lower limit**			**Min:** -200.00	Level
	CStat: CUT	**Datatype:** Float	**Unit:** %	**Def:** 0.00	**2**
	P-Group: TECH	**Active:** Immediately	**QuickComm.:** No	**Max:** 200.00	

Sets lower limit for the PID controller output in [%].

Dependency:

A negative value allows bipolar operation of PID controller.

Note:

P2292 = 100 % corresponds to 4000 hex

P2293	**Ramp-up /-down time of PID limit**			**Min:** 0.00	Level
	CStat: CUT	**Datatype:** Float	**Unit:** s	**Def:** 1.00	**3**
	P-Group: TECH	**Active:** Immediately	**QuickComm.:** No	**Max:** 100.00	

Sets maximum ramp rate on output of PID.

When PI is enabled, the output limits are ramped up from 0 to the limits set in P2291 (PID output upper limit) and P2292 (PID output lower limit). Limits prevent large step changes appearing on the output of the PID when the inverter is started. Once the limits have been reached, the PID controller output is instantaneous.

These ramp times are used whenever a RUN command is issued.

Note:

If an OFF1 or OFF 3 are issued, the inverter output frequency ramps down as set in P1121 (ramp-down time) or P1135 (OFF3 ramp-down time).

r2294	**CO: Act. PID output**			**Min:** -	Level
		Datatype: Float	**Unit:** %	**Def:** -	**2**
	P-Group: TECH			**Max:** -	

Displays PID output in [%]

Note:

r2294 = 100 % corresponds to 4000 hex

P2295	**Gain applied to PID output**			**Min:** -100.00	Level
	CStat: CUT	**Datatype:** Float	**Unit:** -	**Def:** 100.00	**3**
	P-Group: TECH	**Active:** Immediately	**QuickComm.:** No	**Max:** 100.00	

Allows the user to scale the PID output as a percentage value [%].

A gain of 100.0 % means that output signal has not changed from its default value.

P2350	**PID autotune enable**			**Min:** 0	Level
	CStat: CUT	**Datatype:** U16	**Unit:** -	**Def:** 0	**2**
	P-Group: TECH	**Active:** Immediately	**QuickComm.:** No	**Max:** 4	

Enables autotune function of PID controller.

Possible Settings:

0 PID autotuning disabled
1 PID autotuning via Ziegler Nichols (ZN) standard
2 PID autotuning as 1 plus some overshoot (O/S)
3 PID autotuning as 2 little or no overshoot (O/S)
4 PID autotuning PI only, quarter damped response

Dependency:

Active when PID loop is enabled (see P2200).

Note:

P2350 = 1
This is the standard Ziegler Nichols (ZN) tuning which should be a quarter damped response to a step.

P2350 = 2
This tuning will give some overshoot (O/S) but should be faster than option 1

P2350 = 3
This tuning should give little or no overshoot but will not be as fast as option 2.

P2350 = 4
This tuning only changes values of P and I and should be a quarter damped response.

The option to be selected depends on the application but braodly speaking option 1 will give an all round good respsonse, whereas if a faster response is desired option 2 should be selected. If no overshoot is desired then option 3 is the choice. For cases where no D term is wanted then option 4 can be selected. The tuning procedure is the same for all options. It is just the calculation of P,I and D values that is different.

After autotune this parameter is set to zero (autotune completed).

P2354	**PID tuning timeout length**			**Min:** 60	Level
	CStat: CUT	**Datatype:** U16	**Unit:** s	**Def:** 240	**3**
	P-Group: TECH	**Active:** Immediately	**QuickComm.:** No	**Max:** 65000	

This parameter determines the time that the auto tuning code will wait before aborting a tuning run if no oscillation has been obtained.

P2355	**PID tuning offset**			**Min:** 0.00	Level
	CStat: CUT	**Datatype:** Float	**Unit:** %	**Def:** 5.00	**3**
	P-Group: TECH	**Active:** Immediately	**QuickComm.:** No	**Max:** 20.00	

Sets applied offset and deviation for PID autotuning.

Note:

This can be varied depending on plant conditions e.g. a very long system time constant might require a larger value.

3.38 Positioning down ramp

P2480[3]	**Position mode**			**Min:** 1	Level
	CStat: CT	**Datatype:** U16	**Unit:** -	**Def:** 1	**3**
	P-Group: CONTROL	**Active:** first confirm	**QuickComm.:** No	**Max:** 1	

Sets the mode for positioning mode.

Possible Settings:

1 Open loop positioning

Index:

P2480[0] : 1st. Drive data set (DDS)
P2480[1] : 2nd. Drive data set (DDS)
P2480[2] : 3rd. Drive data set (DDS)

P2481[3]	**Gearbox ratio input**			**Min:** 0.01	Level
	CStat: CUT	**Datatype:** Float	**Unit:** -	**Def:** 1.00	**3**
	P-Group: CONTROL	**Active:** first confirm	**QuickComm.:** No	**Max:** 9999.99	

Defines the ratio between number of motor shaft revolutions to equal one revolution of the gearbox output shaft.

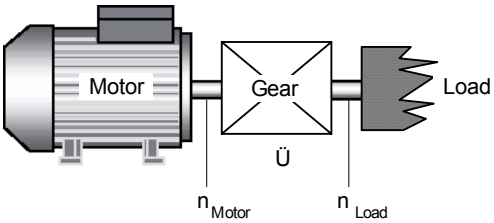

$$Ü = \frac{\text{Motor revolutions}}{\text{Load revolutions}} = \frac{P2481}{P2482}$$

Index:

P2481[0] : 1st. Drive data set (DDS)
P2481[1] : 2nd. Drive data set (DDS)
P2481[2] : 3rd. Drive data set (DDS)

P2482[3]	**Gearbox ratio output**			**Min:** 0.01	Level
	CStat: CUT	**Datatype:** Float	**Unit:** -	**Def:** 1.00	**3**
	P-Group: CONTROL	**Active:** first confirm	**QuickComm.:** No	**Max:** 9999.99	

Defines the ratio between number of motor shaft revolutions to equal one revolution of the gearbox output shaft.

Index:

P2482[0] : 1st. Drive data set (DDS)
P2482[1] : 2nd. Drive data set (DDS)
P2482[2] : 3rd. Drive data set (DDS)

P2484[3]	**No. of shaft turns = 1 Unit**			**Min:** 0.01	Level
	CStat: CUT	**Datatype:** Float	**Unit:** -	**Def:** 1.00	**3**
	P-Group: CONTROL	**Active:** first confirm	**QuickComm.:** No	**Max:** 9999.99	

Sets the number of rotations of the motor shaft required to represent 1 unit of user selected units.

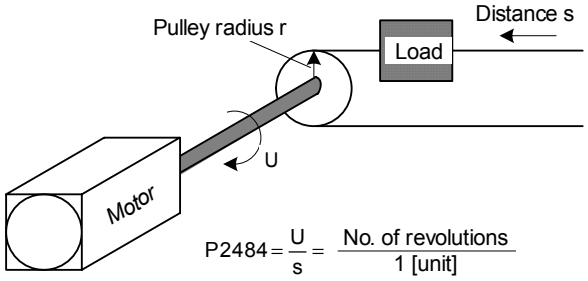

The following equation determines the number of motor shaft revolutions to stop:

$$\text{Revolutions}_{\text{Motor}} = P2488 \cdot P2484 \cdot \frac{P2481}{P2482}$$

Index:

P2484[0] : 1st. Drive data set (DDS)
P2484[1] : 2nd. Drive data set (DDS)
P2484[2] : 3rd. Drive data set (DDS)

P2488[3]	**Distance / No. of revolutions**			**Min:** 0.01	Level
	CStat: CUT	**Datatype:** Float	**Unit:** -	**Def:** 1.00	**3**
	P-Group: CONTROL	**Active:** first confirm	**QuickComm.:** No	**Max:** 9999.99	

Sets the required distance or number of revolutions (see P2484).

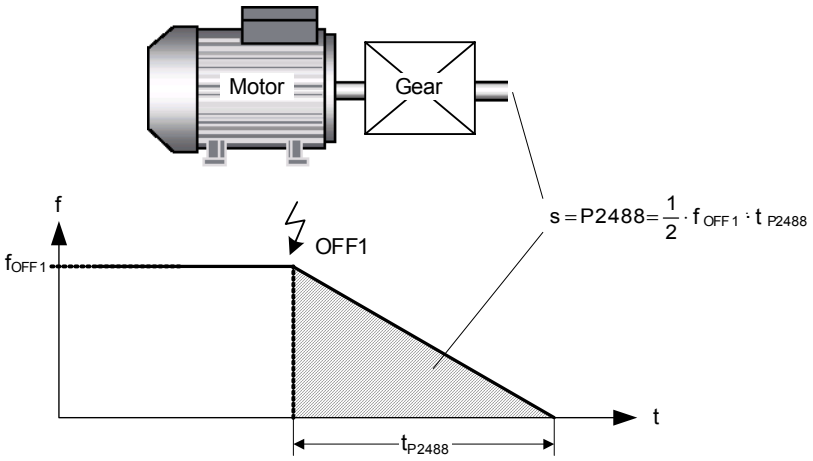

Index:

P2488[0] : 1st. Drive data set (DDS)
P2488[1] : 2nd. Drive data set (DDS)
P2488[2] : 3rd. Drive data set (DDS)

r2489	**Act. number of shaft revolutions**			**Min:** -	Level
		Datatype: Float	**Unit:** -	**Def:** -	**3**
	P-Group: CONTROL			**Max:** -	

Displayes the actual number of shaft revolutions since trigger of positioning.

Note:

Positioning ramp down is an open loop control method. So, there might be a difference between the position setpoint and the calculated actual position shown in r2489. That means, it could happen that the setpoint position is already reached, although r2489 displays a different actual position .

3.39 Free function blocks (FFB)

P2800	Enable FFBs				Min: 0	Level
	CStat: CUT	Datatype: U16	Unit: -		Def: 0	3
	P-Group: TECH	Active: first confirm	QuickComm.: No		Max: 1	

Free function blocks (FFB) are enabled in two steps.

1. Parameter P2800 enables all free function blocks , normally (P2800 = 1).
2. Parameters P2801 and P2802 respectively, enable each free function block individually (P2801[x] > 0 oder P2802[x] > 0).

Possible Settings:

0 Disabled
1 Enabled

Dependency:

All active function blocks will be calculated in every 132 ms.

P2801[17]	Activate FFBs				Min: 0	Level
	CStat: CUT	Datatype: U16	Unit: -		Def: 0	3
	P-Group: TECH	Active: first confirm	QuickComm.: No		Max: 3	

Free function blocks (FFB) are enabled in two steps.

1. Parameter P2800 enables all free function blocks , normally (P2800 = 1)
2. Parameters P2801 and P2802 respectively, enable each free function block individually (P2801[x] > 0 oder P2802[x] > 0)

In addition, Parameters P2801 and P2802 determine the chronological order of each function block. The following table shows that the priority increases from left to right and from bottom to top.

Priority 2: low ← high

	P2802 [13] CMP 2	P2802 [12] CMP 1	P2802 [11] DIV 2	P2802 [10] DIV 1	P2802 [9] MUL 2	P2802 [8] MUL 1	P2802 [7] SUB 2	P2802 [6] SUB 1	P2802 [5] ADD 2	P2802 [4] ADD 1	P2802 [3] Timer 4	P2802 [2] Timer 3	P2802 [1] Timer 2	P2802 [0] Timer 1	P2801 [16] RS-FF 3	P2801 [15] RS-FF 2	P2801 [14] RS-FF 1	P2801 [13] D-FF 2	P2801 [12] D-FF 1	P2801 [11] NOT 3	P2801 [10] NOT 2	P2801 [9] NOT 1	P2801 [8] XOR 3	P2801 [7] XOR 2	P2801 [6] XOR 1	P2801 [5] OR 3	P2801 [4] OR 2	P2801 [3] OR 1	P2801 [2] AND 3	P2801 [1] AND 2	P2801 [0] AND 1
Level 3																															
Level 2																															
Level 1																															
Inactive 0																															

Priority 1: high ↓ low

Possible Settings:

0 Not Active
1 Level 1
2 Level 2
3 Level 3

Index:

P2801[0] : Enable AND 1
P2801[1] : Enable AND 2
P2801[2] : Enable AND 3
P2801[3] : Enable OR 1
P2801[4] : Enable OR 2
P2801[5] : Enable OR 3
P2801[6] : Enable XOR 1
P2801[7] : Enable XOR 2
P2801[8] : Enable XOR 3
P2801[9] : Enable NOT 1
P2801[10] : Enable NOT 2
P2801[11] : Enable NOT 3
P2801[12] : Enable D-FF 1
P2801[13] : Enable D-FF 2
P2801[14] : Enable RS-FF 1
P2801[15] : Enable RS-FF 2
P2801[16] : Enable RS-FF 3

Example:

P2801[3] = 2, P2801[4] = 2, P2802[3] = 3, P2802[4] = 2
FFBs will be calculated in following order:
P2802[3], P2801[3] , P2801[4], P2802[4]

Dependency:

- Set P2800 to 1 to enable function blocks.
- All active function blocks will be calculated in every 132 ms.

P2802[14]	**Activate FFBs**			**Min:** 0	Level
	CStat: CUT	**Datatype:** U16	**Unit:** -	**Def:** 0	**3**
	P-Group: TECH	**Active:** first confirm	**QuickComm.:** No	**Max:** 3	

Free function blocks (FFB) are enabled in two steps.

1. Parameter P2800 enables all free function blocks , normally (P2800 = 1)
2. Parameters P2801 and P2802 respectively, enable each free function block individually (P2801[x] > 0 oder P2802[x] > 0)

In addition, Parameters P2801 and P2802 determine the chronological order of each function block. The following table shows that the priority increases from left to right and from bottom to top.

low ← Priority 2 high

Priority 1 ↓ low

Level 3																															
Level 2																															
Level 1																															
Inactive 0																															
	P2802 [13] CMP 2	P2802 [12] CMP 1	P2802 [11] DIV 2	P2802 [10] DIV 1	P2802 [9] MUL 2	P2802 [8] MUL 1	P2802 [7] SUB 2	P2802 [6] SUB 1	P2802 [5] ADD 2	P2802 [4] ADD 1	P2802 [3] Timer 4	P2802 [2] Timer 3	P2802 [1] Timer 2	P2802 [0] Timer 1	P2801 [16] RS-FF 3	P2801 [15] RS-FF 2	P2801 [14] RS-FF 1	P2801 [13] D-FF 2	P2801 [12] D-FF 1	P2801 [11] NOT 3	P2801 [10] NOT 2	P2801 [9] NOT 1	P2801 [8] XOR 3	P2801 [7] XOR 2	P2801 [6] XOR 1	P2801 [5] OR 3	P2801 [4] OR 2	P2801 [3] OR 1	P2801 [2] AND 3	P2801 [1] AND 2	P2801 [0] AND 1

Possible Settings:

0 Not Active
1 Level 1
2 Level 2
3 Level 3

Index:

P2802[0] : Enable timer 1
P2802[1] : Enable timer 2
P2802[2] : Enable timer 3
P2802[3] : Enable timer 4
P2802[4] : Enable ADD 1
P2802[5] : Enable ADD 2
P2802[6] : Enable SUB 1
P2802[7] : Enable SUB 2
P2802[8] : Enable MUL 1
P2802[9] : Enable MUL 2
P2802[10] : Enable DIV 1
P2802[11] : Enable DIV 2
P2802[12] : Enable CMP 1
P2802[13] : Enable CMP 2

Example:

P2801[3] = 2, P2801[4] = 2, P2802[3] = 3, P2802[4] = 2
FFBs will be calculated in following order:
P2802[3], P2801[3] , P2801[4], P2802[4]

Dependency:

- Set P2800 to 1 to enable function blocks.
- All active function blocks will be calculated in every 132 ms.

P2810[2]	**BI: AND 1**				**Min:** 0:0	Level
	CStat: CUT	**Datatype:** U32	**Unit:** -		**Def:** 0:0	**3**
	P-Group: TECH	**Active:** first confirm	**QuickComm.:** No		**Max:** 4000:0	

P2810[0], P2810[1] define inputs of AND 1 element, output is P2811.

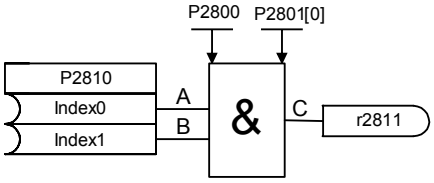

A	B	C
0	0	0
0	1	0
1	0	0
1	1	1

Index:

P2810[0] : Binector input 0 (BI 0)
P2810[1] : Binector input 1 (BI 1)

Dependency:

P2801[0] is active level for the AND element.

r2811	**BO: AND 1**			**Min:** -	Level
		Datatype: U16	**Unit:** -	**Def:** -	**3**
	P-Group: TECH			**Max:** -	

Output of AND 1 element. Displays and logic of bits defined in P2810[0], P2810[1].

Dependency:

P2801[0] is active level for the AND element.

P2812[2]	**BI: AND 2**				**Min:** 0:0	Level
	CStat: CUT	**Datatype:** U32	**Unit:** -		**Def:** 0:0	**3**
	P-Group: TECH	**Active:** first confirm	**QuickComm.:** No		**Max:** 4000:0	

P2812[0], 2812[1] define inputs of AND 2 element, output is P2813.

Index:

P2812[0] : Binector input 0 (BI 0)
P2812[1] : Binector input 1 (BI 1)

Dependency:

P2801[1] is active level for the AND element.

r2813	**BO: AND 2**			**Min:** -	Level
		Datatype: U16	**Unit:** -	**Def:** -	**3**
	P-Group: TECH			**Max:** -	

Output of AND 2 element. Displays and logic of bits defined in P2812[0], P2812[1].

Dependency:

P2801[1] is active level for the AND element.

P2814[2]	**BI: AND 3**				**Min:** 0:0	Level
	CStat: CUT	**Datatype:** U32	**Unit:** -		**Def:** 0:0	**3**
	P-Group: TECH	**Active:** first confirm	**QuickComm.:** No		**Max:** 4000:0	

P2814[0], P2814[1] define inputs of AND 3 element, output is P2815.

Index:

P2814[0] : Binector input 0 (BI 0)
P2814[1] : Binector input 1 (BI 1)

Dependency:

P2801[2] is active level for the AND element.

r2815	**BO: AND 3**			**Min:** -	Level
		Datatype: U16	**Unit:** -	**Def:** -	**3**
	P-Group: TECH			**Max:** -	

Output of AND 3 element. Displays and logic of bits defined in P2814[0], P2814[1].

Dependency:

P2801[2] is active level for the AND element.

P2816[2]	**BI: OR 1**				**Min:** 0:0	Level
	CStat: CUT	**Datatype:** U32	**Unit:** -		**Def:** 0:0	**3**
	P-Group: TECH	**Active:** first confirm	**QuickComm.:** No		**Max:** 4000:0	

P2816[0], P2816[1] define inputs of OR 1 element, output is P2817.

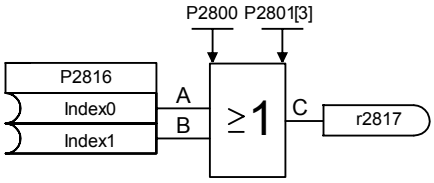

A	B	C
0	0	0
0	1	1
1	0	1
1	1	1

Index:
P2816[0] : Binector input 0 (BI 0)
P2816[1] : Binector input 1 (BI 1)
Dependency:
P2801[3] is active level for the OR element.

r2817	**BO: OR 1**			**Min:** -	Level
		Datatype: U16	**Unit:** -	**Def:** -	**3**
	P-Group: TECH			**Max:** -	

Output of OR 1 element. Displays or logic of bits defined in P2816[0], P2816[1].
Dependency:
P2801[3] is active level for the OR element.

P2818[2]	**BI: OR 2**				**Min:** 0:0	Level
	CStat: CUT	**Datatype:** U32	**Unit:** -		**Def:** 0:0	**3**
	P-Group: TECH	**Active:** first confirm	**QuickComm.:** No		**Max:** 4000:0	

P2818[0], P2818[1] define inputs of OR 2 element, output is P2819.
Index:
P2818[0] : Binector input 0 (BI 0)
P2818[1] : Binector input 1 (BI 1)
Dependency:
P2801[4] is active level for the OR element.

r2819	**BO: OR 2**			**Min:** -	Level
		Datatype: U16	**Unit:** -	**Def:** -	**3**
	P-Group: TECH			**Max:** -	

Output of OR 2 element. Displays or logic of bits defined in P2818[0], P2818[1].
Dependency:
P2801[4] is active level for the OR element.

P2820[2]	**BI: OR 3**				**Min:** 0:0	Level
	CStat: CUT	**Datatype:** U32	**Unit:** -		**Def:** 0:0	**3**
	P-Group: TECH	**Active:** first confirm	**QuickComm.:** No		**Max:** 4000:0	

P2820[0], P2820[1] define inputs of OR 3 element, output is P2821.
Index:
P2820[0] : Binector input 0 (BI 0)
P2820[1] : Binector input 1 (BI 1)
Dependency:
P2801[5] is active level for the OR element.

r2821	**BO: OR 3**			**Min:** -	Level
		Datatype: U16	**Unit:** -	**Def:** -	**3**
	P-Group: TECH			**Max:** -	

Output of OR 3 element. Displays or logic of bits defined in P2820[0], P2820[1].
Dependency:
P2801[5] is active level for the OR element.

P2822[2]	**BI: XOR 1**			**Min:** 0:0	Level
	CStat: CUT	**Datatype:** U32	**Unit:** -	**Def:** 0:0	**3**
	P-Group: TECH	**Active:** first confirm	**QuickComm.:** No	**Max:** 4000:0	

P2822[0], P2822[1] define inputs of XOR 1 element, output is P2823.

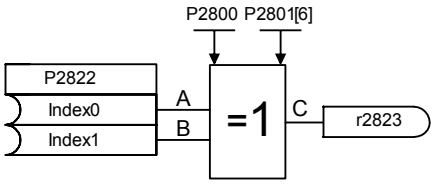

A	B	C
0	0	0
0	1	1
1	0	1
1	1	0

Index:

P2822[0] : Binector input 0 (BI 0)
P2822[1] : Binector input 1 (BI 1)

Dependency:

P2801[6] is active level for the XOR element.

r2823	**BO: XOR 1**			**Min:** -	Level
		Datatype: U16	**Unit:** -	**Def:** -	**3**
	P-Group: TECH			**Max:** -	

Output of XOR 1 element. Displays exclusive-or logic of bits defined in P2822[0], P2822[1].

Dependency:

P2801[6] is active level for the XOR element.

P2824[2]	**BI: XOR 2**			**Min:** 0:0	Level
	CStat: CUT	**Datatype:** U32	**Unit:** -	**Def:** 0:0	**3**
	P-Group: TECH	**Active:** first confirm	**QuickComm.:** No	**Max:** 4000:0	

P2824[0], P2824[1] define inputs of XOR 2 element, output is P2825.

Index:

P2824[0] : Binector input 0 (BI 0)
P2824[1] : Binector input 1 (BI 1)

Dependency:

P2801[7] is active level for the XOR element.

r2825	**BO: XOR 2**			**Min:** -	Level
		Datatype: U16	**Unit:** -	**Def:** -	**3**
	P-Group: TECH			**Max:** -	

Output of XOR 2 element. Displays exclusive-or logic of bits defined in P2824[0], P2824[1].

Dependency:

P2801[7] is active level for the XOR element.

P2826[2]	**BI: XOR 3**			**Min:** 0:0	Level
	CStat: CUT	**Datatype:** U32	**Unit:** -	**Def:** 0:0	**3**
	P-Group: TECH	**Active:** first confirm	**QuickComm.:** No	**Max:** 4000:0	

P2826[0], P2826[1] define inputs of XOR 3 element, output is P2827.

Index:

P2826[0] : Binector input 0 (BI 0)
P2826[1] : Binector input 1 (BI 1)

Dependency:

P2801[8] is active level for the XOR element.

r2827	**BO: XOR 3**			**Min:** -	Level
		Datatype: U16	**Unit:** -	**Def:** -	**3**
	P-Group: TECH			**Max:** -	

Output of XOR 3 element. Displays exclusive-or logic of bits defined in P2826[0], P2826[1].

Dependency:

P2801[8] is active level for the XOR element.

P2828	**BI: NOT 1**				**Min:** 0:0	Level
	CStat: CUT	**Datatype:** U32	**Unit:** -		**Def:** 0:0	**3**
	P-Group: TECH	**Active:** first confirm	**QuickComm.:** No		**Max:** 4000:0	

P2828 defines input of NOT 1 element, output is P2829.

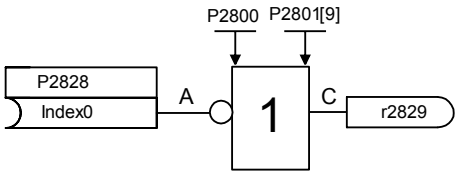

A	C
0	1
1	0

Dependency:
P2801[9] is active level for the NOT element.

r2829	**BO: NOT 1**			**Min:** -	Level
		Datatype: U16	**Unit:** -	**Def:** -	**3**
	P-Group: TECH			**Max:** -	

Output of NOT 1 element. Displays not logic of bit defined in P2828.
Dependency:
P2801[9] is active level for the NOT element.

P2830	**BI: NOT 2**				**Min:** 0:0	Level
	CStat: CUT	**Datatype:** U32	**Unit:** -		**Def:** 0:0	**3**
	P-Group: TECH	**Active:** first confirm	**QuickComm.:** No		**Max:** 4000:0	

P2830 defines input of NOT 2 element, output is P2831.
Dependency:
P2801[10] is active level for the NOT element.

r2831	**BO: NOT 2**			**Min:** -	Level
		Datatype: U16	**Unit:** -	**Def:** -	**3**
	P-Group: TECH			**Max:** -	

Output of NOT 2 element. Displays not logic of bit defined in P2830.
Dependency:
P2801[10] is active level for the NOT element.

P2832	**BI: NOT 3**				**Min:** 0:0	Level
	CStat: CUT	**Datatype:** U32	**Unit:** -		**Def:** 0:0	**3**
	P-Group: TECH	**Active:** first confirm	**QuickComm.:** No		**Max:** 4000:0	

P2832 defines input of NOT 3 element, output is P2833.
Dependency:
P2801[11] is active level for the NOT element.

r2833	**BO: NOT 3**			**Min:** -	Level
		Datatype: U16	**Unit:** -	**Def:** -	**3**
	P-Group: TECH			**Max:** -	

Output of NOT 3 element. Displays not logic of bit defined in P2832.
Dependency:
P2801[11] is active level for the NOT element.

P2834[4]	**BI: D-FF 1**				**Min:** 0:0	Level
	CStat: CUT	**Datatype:** U32	**Unit:** -		**Def:** 0:0	**3**
	P-Group: TECH	**Active:** first confirm	**QuickComm.:** No		**Max:** 4000:0	

P2834[0], P2834[1], P2834[2], P2834[3] define inputs of D-FlipFlop 1, outputs are P2835, P2836.

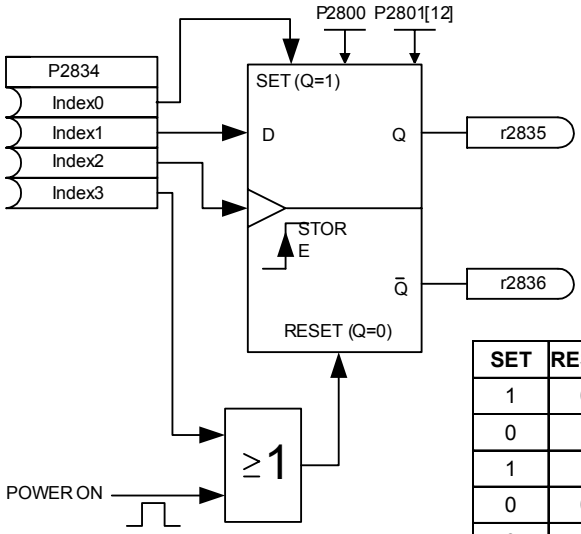

SET	RESET	D	STORE	Q	$\overline{Q}$
1	0	x	x	1	0
0	1	x	x	0	1
1	1	x	x	Q_{n-1}	$\overline{Q}_{n-1}$
0	0	1	↑	1	0
0	0	0	↑	0	1
POWER-ON				0	1

Index:

P2834[0] : Binector input: Set
P2834[1] : Binector input: D input
P2834[2] : Binector input: Store pulse
P2834[3] : Binector input: Reset

Dependency:

P2801[12] is active level for the D-FlipFlop.

r2835	**BO: Q D-FF 1**			**Min:** -	Level
		Datatype: U16	**Unit:** -	**Def:** -	**3**
	P-Group: TECH			**Max:** -	

Displays output of D-FlipFlop 1, inputs are defined in P2834[0], P2834[1], P2834[2], P2834[3]

Dependency:

P2801[12] is active level for the D-FlipFlop.

r2836	**BO: NOT-Q D-FF 1**			**Min:** -	Level
		Datatype: U16	**Unit:** -	**Def:** -	**3**
	P-Group: TECH			**Max:** -	

Displays Not-output of D-FlipFlop 1, inputs are defined in P2834[0], P2834[1], P2834[2], P2834[3]

Dependency:

P2801[12] is active level for the D-FlipFlop.

P2837[4]	**BI: D-FF 2**				**Min:** 0:0	Level
	CStat: CUT	**Datatype:** U32	**Unit:** -		**Def:** 0:0	**3**
	P-Group: TECH	**Active:** first confirm	**QuickComm.:** No		**Max:** 4000:0	

P2837[0], P2837[1], P2837[2], P2837[3] define inputs of D-FlipFlop 2, outputs are P2838, 2839.

Index:

P2837[0] : Binector input: Set
P2837[1] : Binector input: D input
P2837[2] : Binector input: Store pulse
P2837[3] : Binector input: Reset

Dependency:

P2801[13] is active level for the D-FlipFlop.

r2838	**BO: Q D-FF 2**			**Min:** -	Level **3**
		Datatype: U16	**Unit:** -	**Def:** -	
	P-Group: TECH			**Max:** -	

Displays output of D-FlipFlop 2, inputs are defined in P2837[0], P2837[1], P2837[2], P2837[3]

Dependency:

P2801[13] is active level for the D-FlipFlop.

r2839	**BO: NOT-Q D-FF 2**			**Min:** -	Level **3**
		Datatype: U16	**Unit:** -	**Def:** -	
	P-Group: TECH			**Max:** -	

Displays Not-output of D-FlipFlop 2, inputs are defined in P2837[0], P2837[1], P2837[2], P2837[3]

Dependency:

P2801[13] is active level for the D-FlipFlop.

P2840[2]	**BI: RS-FF 1**			**Min:** 0:0	Level **3**
	CStat: CUT	**Datatype:** U32	**Unit:** -	**Def:** 0:0	
	P-Group: TECH	**Active:** first confirm	**QuickComm.:** No	**Max:** 4000:0	

P2840[0], P2840[1] define inputs of RS-FlipFlop 1, outputs are P2841, P2842.

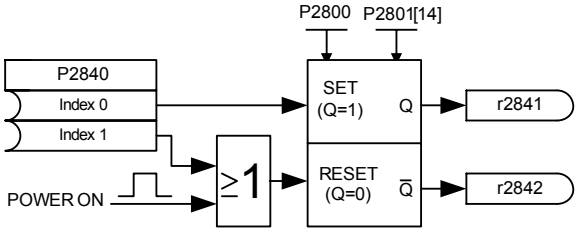

SET	RESET	Q	$\overline{Q}$
0	0	Q_{n-1}	$\overline{Q}_{n-1}$
0	1	0	1
1	0	1	0
1	1	Q_{n-1}	$\overline{Q}_{n-1}$
POWER-ON		0	1

Index:

P2840[0] : Binector input: Set
P2840[1] : Binector input: Reset

Dependency:

P2801[14] is active level for the RS-FlipFlop.

r2841	**BO: Q RS-FF 1**			**Min:** -	Level **3**
		Datatype: U16	**Unit:** -	**Def:** -	
	P-Group: TECH			**Max:** -	

Displays output of RS-FlipFlop 1, inputs are defined in P2840[0], P2840[1]

Dependency:

P2801[14] is active level for the RS-FlipFlop.

r2842	**BO: NOT-Q RS-FF 1**			**Min:** -	Level **3**
		Datatype: U16	**Unit:** -	**Def:** -	
	P-Group: TECH			**Max:** -	

Displays Not-output of RS-FlipFlop 1, inputs are defined in P2840[0], P2840[1]

Dependency:

P2801[14] is active level for the RS-FlipFlop.

P2843[2]	**BI: RS-FF 2**			**Min:** 0:0	Level **3**
	CStat: CUT	**Datatype:** U32	**Unit:** -	**Def:** 0:0	
	P-Group: TECH	**Active:** first confirm	**QuickComm.:** No	**Max:** 4000:0	

P2843[0], P2843[1] define inputs of RS-FlipFlop 2, outputs are P2844, P2845.

Index:

P2843[0] : Binector input: Set
P2843[1] : Binector input: Reset

Dependency:

P2801[15] is active level for the RS-FlipFlop.

r2844	**BO: Q RS-FF 2**			**Min:** -	Level **3**
		Datatype: U16	**Unit:** -	**Def:** -	
	P-Group: TECH			**Max:** -	

Displays output of RS-FlipFlop 2, inputs are defined in P2843[0], P2843[1]

Dependency:

P2801[15] is active level for the RS-FlipFlop.

r2845	**BO: NOT-Q RS-FF 2**			**Min:**	-	Level
		Datatype: U16	**Unit:** -	**Def:**	-	**3**
	P-Group: TECH			**Max:**	-	

Displays Not-output of RS-FlipFlop 2, inputs are defined in P2843[0], P2843[1]

Dependency:

P2801[15] is active level for the RS-FlipFlop.

P2846[2]	**BI: RS-FF 3**			**Min:**	0:0	Level
	CStat: CUT	**Datatype:** U32	**Unit:** -	**Def:**	0:0	**3**
	P-Group: TECH	**Active:** first confirm	**QuickComm.:** No	**Max:**	4000:0	

P2846[0], P2846[1] define inputs of RS-FlipFlop 3, outputs are P2847, P2848.

Index:

P2846[0] : Binector input: Set
P2846[1] : Binector input: Reset

Dependency:

P2801[16] is active level for the RS-FlipFlop.

r2847	**BO: Q RS-FF 3**			**Min:**	-	Level
		Datatype: U16	**Unit:** -	**Def:**	-	**3**
	P-Group: TECH			**Max:**	-	

Displays output of RS-FlipFlop 3, inputs are defined in P2846[0], P2846[1]

Dependency:

P2801[16] is active level for the RS-FlipFlop.

r2848	**BO: NOT-Q RS-FF 3**			**Min:**	-	Level
		Datatype: U16	**Unit:** -	**Def:**	-	**3**
	P-Group: TECH			**Max:**	-	

Displays Not-output of RS-FlipFlop 3, inputs are defined in P2846[0], P2846[1]

Dependency:

P2801[16] is active level for the RS-FlipFlop.

P2849	**BI: Timer 1**			**Min:** 0:0	Level
	CStat: CUT	**Datatype:** U32	**Unit:** -	**Def:** 0:0	**3**
	P-Group: TECH	**Active:** first confirm	**QuickComm.:** No	**Max:** 4000:0	

Define input signal of timer 1. P2849, P2850, P2851 are the inputs of the timer, outputs are P2852, P2853.

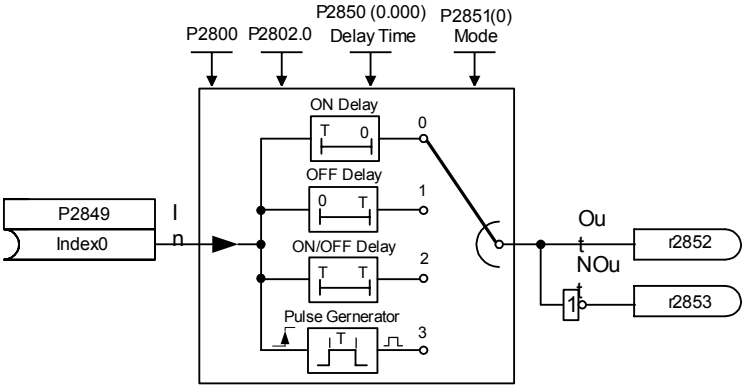

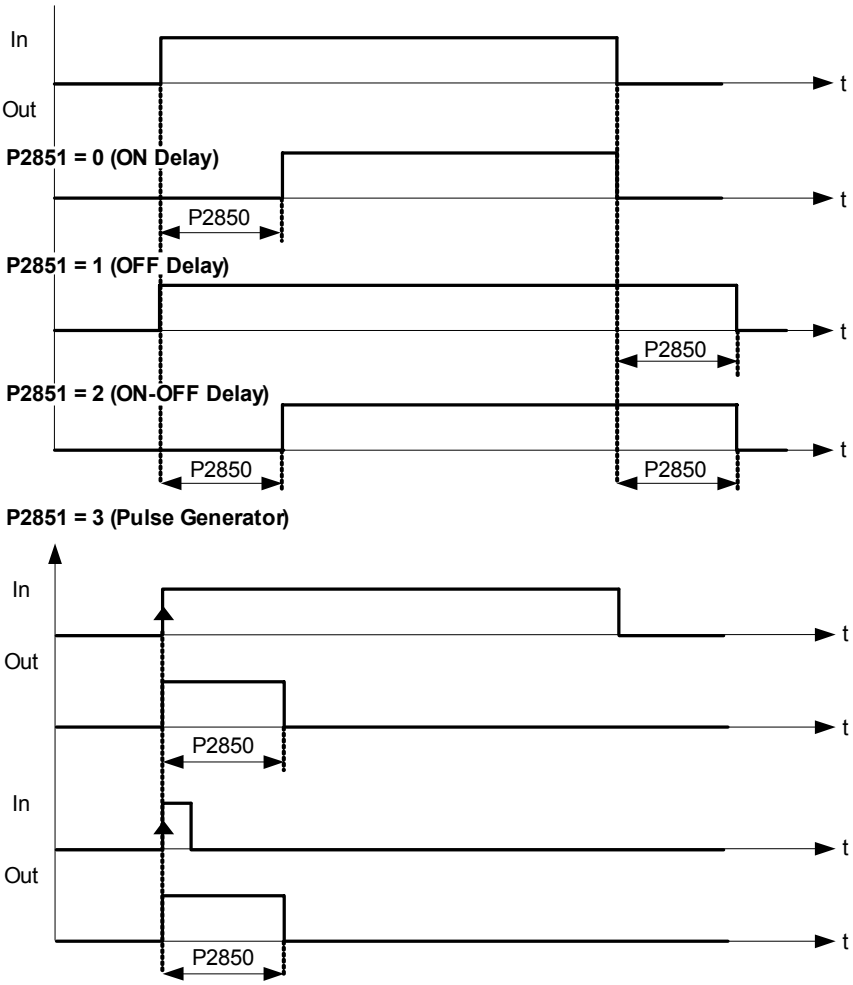

Dependency:

P2802[0] is active level for the timer.

P2850	**Delay time of timer 1**			**Min:** 0.0	Level
	CStat: CUT	**Datatype:** Float	**Unit:** -	**Def:** 0.0	**3**
	P-Group: TECH	**Active:** first confirm	**QuickComm.:** No	**Max:** 9999.9	

Defines delay time of timer 1. P2849, P2850, P2851 are the inputs of the timer, outputs are P2852, P2853.

Dependency:

P2802[0] is active level for the timer.

P2851	Mode timer 1			Min: 0	Level
	CStat: CUT	Datatype: U16	Unit: -	Def: 0	3
	P-Group: TECH	Active: first confirm	QuickComm.: No	Max: 13	

Selects mode of timer 1. P2849, P2850, P2851 are the inputs of the timer, outputs are P2852, P2853.

Possible Settings:

0 ON delay (seconds)
1 OFF delay (seconds)
2 ON/OFF delay (seconds)
3 Pulse generator (seconds)
10 ON delay (minutes)
11 OFF delay (minutes)
12 ON/OFF delay (minutes)
13 Pulse generator (minutes)

Dependency:

P2802[0] is active level for the timer.

r2852	BO: Timer 1			Min: -	Level
		Datatype: U16	Unit: -	Def: -	3
	P-Group: TECH			Max: -	

Displays output of timer 1. P2849, P2850, P2851 are the inputs of the timer, outputs are P2852, P2853.

Dependency:

P2802[0] is active level for the timer.

r2853	BO: Nout timer 1			Min: -	Level
		Datatype: U16	Unit: -	Def: -	3
	P-Group: TECH			Max: -	

Displays Not-output of timer 1. P2849, P2850, P2851 are the inputs of the timer, outputs are P2852, P2853.

Dependency:

P2802[0] is active level for the timer.

P2854	BI: Timer 2			Min: 0:0	Level
	CStat: CUT	Datatype: U32	Unit: -	Def: 0:0	3
	P-Group: TECH	Active: first confirm	QuickComm.: No	Max: 4000:0	

Define input signal of timer 2. P2854, P2855, P2856 are the inputs of the timer, outputs are P2857, P2858.

Dependency:

P2802[1] is active level for the timer.

P2855	Delay time of timer 2			Min: 0.0	Level
	CStat: CUT	Datatype: Float	Unit: -	Def: 0.0	3
	P-Group: TECH	Active: first confirm	QuickComm.: No	Max: 9999.9	

Defines delay time of timer 2. P2854, P2855, P2856 are the inputs of the timer, outputs are P2857, P2858.

Dependency:

P2802[1] is active level for the timer.

P2856	Mode timer 2			Min: 0	Level
	CStat: CUT	Datatype: U16	Unit: -	Def: 0	3
	P-Group: TECH	Active: first confirm	QuickComm.: No	Max: 13	

Selects mode of timer 2. P2854, P2855, P2856 are the inputs of the timer, outputs are P2857, P2858.

Possible Settings:

0 ON delay (seconds)
1 OFF delay (seconds)
2 ON/OFF delay (seconds)
3 Pulse generator (seconds)
10 ON delay (minutes)
11 OFF delay (minutes)
12 ON/OFF delay (minutes)
13 Pulse generator (minutes)

Dependency:

P2802[1] is active level for the timer.

r2857	BO: Timer 2			Min: -	Level
		Datatype: U16	Unit: -	Def: -	3
	P-Group: TECH			Max: -	

Displays output of timer 2. P2854, P2855, P2856 are the inputs of the timer, outputs are P2857, P2858.

Dependency:

P2802[1] is active level for the timer.

r2858	**BO: Nout timer 2**			**Min:**	-	Level **3**
		Datatype: U16	**Unit:** -	**Def:**	-	
	P-Group: TECH			**Max:**	-	

Displays Not-output of timer 2 P2854, P2855, P2856 are the inputs of the timer, outputs are P2857, P2858.

Dependency:

P2802[1] is active level for the timer.

P2859	**BI: Timer 3**			**Min:**	0:0	Level **3**
	CStat: CUT	**Datatype:** U32	**Unit:** -	**Def:**	0:0	
	P-Group: TECH	**Active:** first confirm	**QuickComm.:** No	**Max:**	4000:0	

Define input signal of timer 3. P2859, P2860, P2861 are the inputs of the timer, outputs are P2862, P2863.

Dependency:

P2802[2] is active level for the timer.

P2860	**Delay time of timer 3**			**Min:**	0.0	Level **3**
	CStat: CUT	**Datatype:** Float	**Unit:** -	**Def:**	0.0	
	P-Group: TECH	**Active:** first confirm	**QuickComm.:** No	**Max:**	9999.9	

Defines delay time of timer 3. P2859, P2860, P2861 are the inputs of the timer, outputs are P2862, P2863.

Dependency:

P2802[2] is active level for the timer.

P2861	**Mode timer 3**			**Min:**	0	Level **3**
	CStat: CUT	**Datatype:** U16	**Unit:** -	**Def:**	0	
	P-Group: TECH	**Active:** first confirm	**QuickComm.:** No	**Max:**	13	

Selects mode of timer 3. P2859, P2860, P2861 are the inputs of the timer, outputs are P2862, P2863.

Possible Settings:

0 ON delay (seconds)
1 OFF delay (seconds)
2 ON/OFF delay (seconds)
3 Pulse generator (seconds)
10 ON delay (minutes)
11 OFF delay (minutes)
12 ON/OFF delay (minutes)
13 Pulse generator (minutes)

Dependency:

P2802[2] is active level for the timer.

r2862	**BO: Timer 3**			**Min:**	-	Level **3**
		Datatype: U16	**Unit:** -	**Def:**	-	
	P-Group: TECH			**Max:**	-	

Displays output of timer 3. P2859, P2860, P2861 are the inputs of the timer, outputs are P2862, P2863.

Dependency:

P2802[2] is active level for the timer.

r2863	**BO: Nout timer 3**			**Min:**	-	Level **3**
		Datatype: U16	**Unit:** -	**Def:**	-	
	P-Group: TECH			**Max:**	-	

Displays Not-output of timer 3. P2859, P2860, P2861 are the inputs of the timer, outputs are P2862, P2863.

Dependency:

P2802[2] is active level for the timer.

P2864	**BI: Timer 4**			**Min:**	0:0	Level **3**
	CStat: CUT	**Datatype:** U32	**Unit:** -	**Def:**	0:0	
	P-Group: TECH	**Active:** first confirm	**QuickComm.:** No	**Max:**	4000:0	

Define input signal of timer 4. P2864, P2865, P2866 are the inputs of the timer, outputs are P2867, P2868.

Dependency:

P2802[3] is active level for the timer.

P2865	**Delay time of timer 4**			**Min:**	0.0	Level **3**
	CStat: CUT	**Datatype:** Float	**Unit:** -	**Def:**	0.0	
	P-Group: TECH	**Active:** first confirm	**QuickComm.:** No	**Max:**	9999.9	

Defines delay time of timer 4. P2864, P2865, P2866 are the inputs of the timer, outputs are P2867, P2868.

Dependency:

P2802[3] is active level for the timer.

P2866	**Mode timer 4**			**Min:** 0	Level
	CStat: CUT	**Datatype:** U16	**Unit:** -	**Def:** 0	**3**
	P-Group: TECH	**Active:** first confirm	**QuickComm.:** No	**Max:** 13	

Selects mode of timer 4. P2864, P2865, P2866 are the inputs of the timer, outputs are P2867, P2868.

Possible Settings:

0 ON delay (seconds)
1 OFF delay (seconds)
2 ON/OFF delay (seconds)
3 Pulse generator (seconds)
10 ON delay (minutes)
11 OFF delay (minutes)
12 ON/OFF delay (minutes)
13 Pulse generator (minutes)

Dependency:

P2802[3] is active level for the timer.

r2867	**BO: Timer 4**			**Min:** -	Level
		Datatype: U16	**Unit:** -	**Def:** -	**3**
	P-Group: TECH			**Max:** -	

Displays output of timer 4. P2864, P2865, P2866 are the inputs of the timer, outputs are P2867, P2868.

Dependency:

P2802[3] is active level for the timer.

r2868	**BO: Nout timer 4**			**Min:** -	Level
		Datatype: U16	**Unit:** -	**Def:** -	**3**
	P-Group: TECH			**Max:** -	

Displays Not-output of timer 4. P2864, P2865, P2866 are the inputs of the timer, outputs are P2867, P2868.

Dependency:

P2802[3] is active level for the timer.

P2869[2]	**CI: ADD 1**			**Min:** 0:0	Level
	CStat: CUT	**Datatype:** U32	**Unit:** -	**Def:** 755:0	**3**
	P-Group: TECH	**Active:** first confirm	**QuickComm.:** No	**Max:** 4000:0	

Define inputs of Adder 1, result is in P2870.

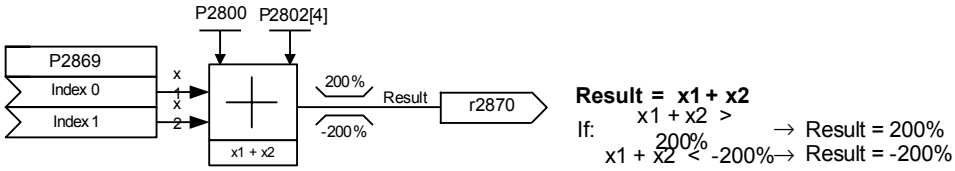

Index:

P2869[0] : Connector input 0 (CI 0)
P2869[1] : Connector input 1 (CI 1)

Dependency:

P2802[4] is the active level for the Adder.

r2870	**CO: ADD 1**			**Min:** -	Level
		Datatype: Float	**Unit:** %	**Def:** -	**3**
	P-Group: TECH			**Max:** -	

Result of Adder 1.

Dependency:

P2802[4] is active level for the Adder.

P2871[2]	**CI: ADD 2**			**Min:** 0:0	Level
	CStat: CUT	**Datatype:** U32	**Unit:** -	**Def:** 755:0	**3**
	P-Group: TECH	**Active:** first confirm	**QuickComm.:** No	**Max:** 4000:0	

Define inputs of Adder 2, result is in P2872.

Index:

P2871[0] : Connector input 0 (CI 0)
P2871[1] : Connector input 1 (CI 1)

Dependency:

P2802[5] is active level for the Adder.

r2872	**CO: ADD 2**			**Min:** -	Level
		Datatype: Float	**Unit:** %	**Def:** -	**3**
	P-Group: TECH			**Max:** -	

Result of Adder 2.

Dependency:

P2802[5] is active level for the Adder.

P2873[2]	**CI: SUB 1**			**Min:** 0:0	Level
	CStat: CUT	**Datatype:** U32	**Unit:** -	**Def:** 755:0	**3**
	P-Group: TECH	**Active:** first confirm	**QuickComm.:** No	**Max:** 4000:0	

Define inputs of Subtracter 1, result is in P2874.

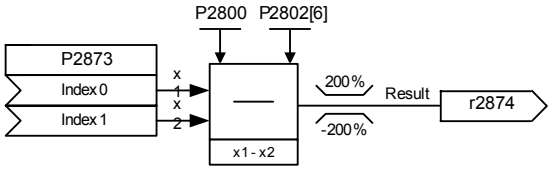

Result = x1 - x2

If: x1 - x2 > 200% → Result = 200%
x1 - x2 < -200% → Result = -200%

Index:
P2873[0] : Connector input 0 (CI 0)
P2873[1] : Connector input 1 (CI 1)

Dependency:
P2802[6] is active level for the Subtracter.

r2874	**CO: SUB 1**			**Min:** -	Level
		Datatype: Float	**Unit:** %	**Def:** -	**3**
	P-Group: TECH			**Max:** -	

Result of Subtracter 1.

Dependency:
P2802[6] is active level for the Subtracter.

P2875[2]	**CI: SUB 2**			**Min:** 0:0	Level
	CStat: CUT	**Datatype:** U32	**Unit:** -	**Def:** 755:0	**3**
	P-Group: TECH	**Active:** first confirm	**QuickComm.:** No	**Max:** 4000:0	

Define inputs of Subtracter 2, result is in P2876.

Index:
P2875[0] : Connector input 0 (CI 0)
P2875[1] : Connector input 1 (CI 1)

Dependency:
P2802[7] is active level for the Subtracter.

r2876	**CO: SUB 2**			**Min:** -	Level
		Datatype: Float	**Unit:** %	**Def:** -	**3**
	P-Group: TECH			**Max:** -	

Result of Subtracter 2.

Dependency:
P2802[7] is active level for the Subtracter.

P2877[2]	**CI: MUL 1**			**Min:** 0:0	Level
	CStat: CUT	**Datatype:** U32	**Unit:** -	**Def:** 755:0	**3**
	P-Group: TECH	**Active:** first confirm	**QuickComm.:** No	**Max:** 4000:0	

Define inputs of Multiplier 1, result is in P2878.

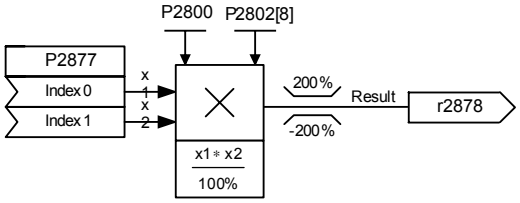

$$\textbf{Result} = \frac{x1 * x2}{100\%}$$

If: $\frac{x1 * x2}{100\%} > 200\% \rightarrow$ Result = 200%

$\frac{x1 * x2}{100\%} < -200\% \rightarrow$ Result = -200%

Index:
P2877[0] : Connector input 0 (CI 0)
P2877[1] : Connector input 1 (CI 1)

Dependency:
P2802[8] is active level for the Multiplier.

r2878	**CO: MUL 1**			**Min:** -	Level
		Datatype: Float	**Unit:** %	**Def:** -	**3**
	P-Group: TECH			**Max:** -	

Result of Multiplier 1.

Dependency:
P2802[8] is active level for the Multiplier.

P2879[2]	**CI: MUL 2**				**Min:** 0:0	Level
	CStat: CUT	**Datatype:** U32	**Unit:** -		**Def:** 755:0	**3**
	P-Group: TECH	**Active:** first confirm	**QuickComm.:** No		**Max:** 4000:0	

Define inputs of Multiplier 2, result is in P2880.

Index:

P2879[0] : Connector input 0 (CI 0)
P2879[1] : Connector input 1 (CI 1)

Dependency:

P2802[9] is active level for the Multiplier.

r2880	**CO: MUL 2**			**Min:** -	Level
		Datatype: Float	**Unit:** %	**Def:** -	**3**
	P-Group: TECH			**Max:** -	

Result of Multiplier 2.

Dependency:

P2802[9] is active level for the Multiplier.

P2881[2]	**CI: DIV 1**			**Min:** 0:0	Level
	CStat: CUT	**Datatype:** U32	**Unit:** -	**Def:** 755:0	**3**
	P-Group: TECH	**Active:** first confirm	**QuickComm.:** No	**Max:** 4000:0	

Define inputs of Divider 1, result is in P2882.

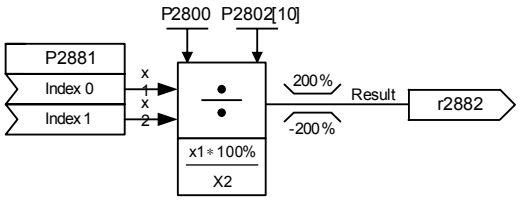

$$\textbf{Result} = \frac{x1 * 100\%}{x2}$$

If: $\frac{x1 * 100\%}{x2} > 200\% \rightarrow$ Result = 200%

$\frac{x1 * 100\%}{x2} < -200\% \rightarrow$ Result = -200%

Index:

P2881[0] : Connector input 0 (CI 0)
P2881[1] : Connector input 1 (CI 1)

Dependency:

P2802[10] is active level for the Divider.

r2882	**CO: DIV 1**			**Min:** -	Level
		Datatype: Float	**Unit:** %	**Def:** -	**3**
	P-Group: TECH			**Max:** -	

Result of Divider 1.

Dependency:

P2802[10] is active level for the Divider.

P2883[2]	**CI: DIV 2**			**Min:** 0:0	Level
	CStat: CUT	**Datatype:** U32	**Unit:** -	**Def:** 755:0	**3**
	P-Group: TECH	**Active:** first confirm	**QuickComm.:** No	**Max:** 4000:0	

Define inputs of Divider 2, result is in P2884.

Index:

P2883[0] : Connector input 0 (CI 0)
P2883[1] : Connector input 1 (CI 1)

Dependency:

P2802[11] is active level for the Divider.

r2884	**CO: DIV 2**			**Min:** -	Level
		Datatype: Float	**Unit:** %	**Def:** -	**3**
	P-Group: TECH			**Max:** -	

Result of Divider 2.

Dependency:

P2802[11] is active level for the Divider.

P2885[2]	**CI: CMP 1**			**Min:** 0:0	Level
	CStat: CUT	**Datatype:** U32	**Unit:** -	**Def:** 755:0	**3**
	P-Group: TECH	**Active:** first confirm	**QuickComm.:** No	**Max:** 4000:0	

Defines inputs of Comparator 1, output is P2886.

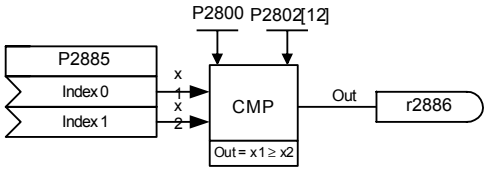

x1 ≥ x2 → Out = 1
x1 < x2 → Out = 0

Index:

P2885[0] : Connector input 0 (CI 0)
P2885[1] : Connector input 1 (CI 1)

Dependency:

P2802[12] is active level for the Comparator.

r2886	**BO: CMP 1**			**Min:** -	Level
		Datatype: U16	**Unit:** -	**Def:** -	**3**
	P-Group: TECH			**Max:** -	

Displays result bit of Comparator 1.

Dependency:

P2802[12] is active level for the Comparator.

P2887[2]	**CI: CMP 2**			**Min:** 0:0	Level
	CStat: CUT	**Datatype:** U32	**Unit:** -	**Def:** 755:0	**3**
	P-Group: TECH	**Active:** first confirm	**QuickComm.:** No	**Max:** 4000:0	

Defines inputs of Comparator 2, output is P2888.

Index:

P2887[0] : Connector input 0 (CI 0)
P2887[1] : Connector input 1 (CI 1)

Dependency:

P2802[13] is active level for the Comparator.

r2888	**BO: CMP 2**			**Min:** -	Level
		Datatype: U16	**Unit:** -	**Def:** -	**3**
	P-Group: TECH			**Max:** -	

Displays result bit of Comparator 2.

Dependency:

P2802[13] is active level for the Comparator.

P2889	**CO: Fixed setpoint 1 in [%]**			**Min:** -200.00	Level
	CStat: CUT	**Datatype:** Float	**Unit:** %	**Def:** 0.00	**3**
	P-Group: TECH	**Active:** first confirm	**QuickComm.:** No	**Max:** 200.00	

Fixed percent setting 1.

Connector Setting in %

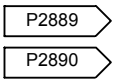

Range : -200% …200%

P2890	**CO: Fixed setpoint 2 in [%]**			**Min:** -200.00	Level
	CStat: CUT	**Datatype:** Float	**Unit:** %	**Def:** 0.00	**3**
	P-Group: TECH	**Active:** first confirm	**QuickComm.:** No	**Max:** 200.00	

Fixed percent setting 2.

3.40 Inverter parameters

P3900	End of quick commissioning			Min: 0	Level
	CStat: C	Datatype: U16	Unit: -	Def: 0	1
	P-Group: QUICK	Active: first confirm	QuickComm.: Yes	Max: 3	

Performs calculations necessary for optimized motor operation.

After completion of calculation, P3900 and P0010 (parameter groups for commissioning) are automatically reset to their original value 0.

Possible Settings:

0 No quick commissioning
1 Start quick commissioning with factory reset
2 Start quick commissioning
3 Start quick commissioning only for motor data

Dependency:

Changeable only when P0010 = 1 (quick commissioning)

Note:

P3900 = 1 :
When setting 1 is selected, only the parameter settings carried out via the commissioning menu "Quick commissioning", are retained; all other parameter changes, including the I/O settings, are lost. Motor calculations are also performed.

P3900 = 2 :
When setting 2 is selected, only those parameters, which depend on the parameters in the commissioning menu "Quick commissioning" (P0010 = 1) are calculated. The I/O settings are also reset to default and the motor calculations performed.

P3900 = 3 :
When setting 3 is selected, only the motor and controller calculations are performed. Exiting quick commissioning with this setting saves time (for example, if only motor rating plate data have been changed).

Calculates a variety of motor parameters, overwriting previous values (see parameter P0340, setting P0340 = 1).

P3950	Access of hidden parameters			Min: 0	Level
	CStat: CUT	Datatype: U16	Unit: -	Def: 0	4
	P-Group: ALWAYS	Active: first confirm	QuickComm.: No	Max: 255	

Accesses special parameters for development (expert only) and factory functionality (calibration parameter).

r3954[13]	CM version and GUI ID			Min: -	Level
		Datatype: U16	Unit: -	Def: -	4
	P-Group: -			Max: -	

Used to classify firmware (only for SIEMENS internal purposes).

Index:

r3954[0] : CM version (major release)
r3954[1] : CM version (minor release)
r3954[2] : CM version (baselevel or patch)
r3954[3] : GUI ID
r3954[4] : GUI ID
r3954[5] : GUI ID
r3954[6] : GUI ID
r3954[7] : GUI ID
r3954[8] : GUI ID
r3954[9] : GUI ID
r3954[10] : GUI ID
r3954[11] : GUI ID major release
r3954[12] : GUI ID minor release

P3980	**Commissioning command selection**			**Min:** 0	Level
	CStat: T	**Datatype:** U16	**Unit:** -	**Def:** 0	**4**
	P-Group: -	**Active:** first confirm	**QuickComm.:** No	**Max:** 67	

Toggles command and setpoint sources between freely programmable BICO parameters and fixed command/setpoint profiles for commissioning.

The command and setpoint sources can be changed independently. The tens digit selects the command source, the ones digit the setpoint source.

Possible Settings:

0	Cmd = BICO parameter	Setpoint = BICO parameter
1	Cmd = BICO parameter	Setpoint = MOP setpoint
2	Cmd = BICO parameter	Setpoint = Analog setpoint
3	Cmd = BICO parameter	Setpoint = Fixed frequency
4	Cmd = BICO parameter	Setpoint = USS on BOP link
5	Cmd = BICO parameter	Setpoint = USS on COM link
6	Cmd = BICO parameter	Setpoint = CB on COM link
7	Cmd = BICO parameter	Setpoint = Analog 2 setp
10	Cmd = BOP	Setpoint = BICO parameter
11	Cmd = BOP	Setpoint = MOP setpoint
12	Cmd = BOP	Setpoint = Analog setpoint
13	Cmd = BOP	Setpoint = Fixed frequency
15	Cmd = BOP	Setpoint = USS on COM link
16	Cmd = BOP	Setpoint = CB on COM link
17	Cmd = BOP	Setpoint = Analog 2 setp
40	Cmd = USS on BOP link	Setpoint = BICO parameter
41	Cmd = USS on BOP link	Setpoint = MOP setpoint
42	Cmd = USS on BOP link	Setpoint = Analog setpoint
43	Cmd = USS on BOP link	Setpoint = Fixed frequency
44	Cmd = USS on BOP link	Setpoint = USS on BOP link
45	Cmd = USS on BOP link	Setpoint = USS on COM link
46	Cmd = USS on BOP link	Setpoint = CB on COM link
47	Cmd = USS on BOP link	Setpoint = Analog 2 setp
50	Cmd = USS on COM link	Setpoint = BICO parameter
51	Cmd = USS on COM link	Setpoint = MOP setpoint
52	Cmd = USS on COM link	Setpoint = Analog setpoint
53	Cmd = USS on COM link	Setpoint = Fixed frequency
54	Cmd = USS on COM link	Setpoint = USS on BOP link
55	Cmd = USS on COM link	Setpoint = USS on COM link
57	Cmd = USS on COM link	Setpoint = Analog 2 setp
60	Cmd = CB on COM link	Setpoint = BICO parameter
61	Cmd = CB on COM link	Setpoint = MOP setpoint
62	Cmd = CB on COM link	Setpoint = Analog setpoint
63	Cmd = CB on COM link	Setpoint = Fixed frequency
64	Cmd = CB on COM link	Setpoint = USS on BOP link
66	Cmd = CB on COM link	Setpoint = CB on COM link
67	Cmd = CB on COM link	Setpoint = Analog 2 setp

P3981	**Reset active fault**			**Min:** 0	Level
	CStat: CT	**Datatype:** U16	**Unit:** -	**Def:** 0	**4**
	P-Group: ALARMS	**Active:** first confirm	**QuickComm.:** No	**Max:** 1	

Resets active faults when changed from 0 to 1.

Possible Settings:

0 No fault reset
1 Reset fault

Note:

Automatically reset to 0.

Details:

See r0947 (last fault code)

r3986[2]	**Number of parameters**			**Min:** -	Level
		Datatype: U16	**Unit:** -	**Def:** -	**4**
	P-Group: -			**Max:** -	

Number of parameters on the drive

Index:

r3986[0] : Read only
r3986[1] : Read & write

4 Function Diagrams

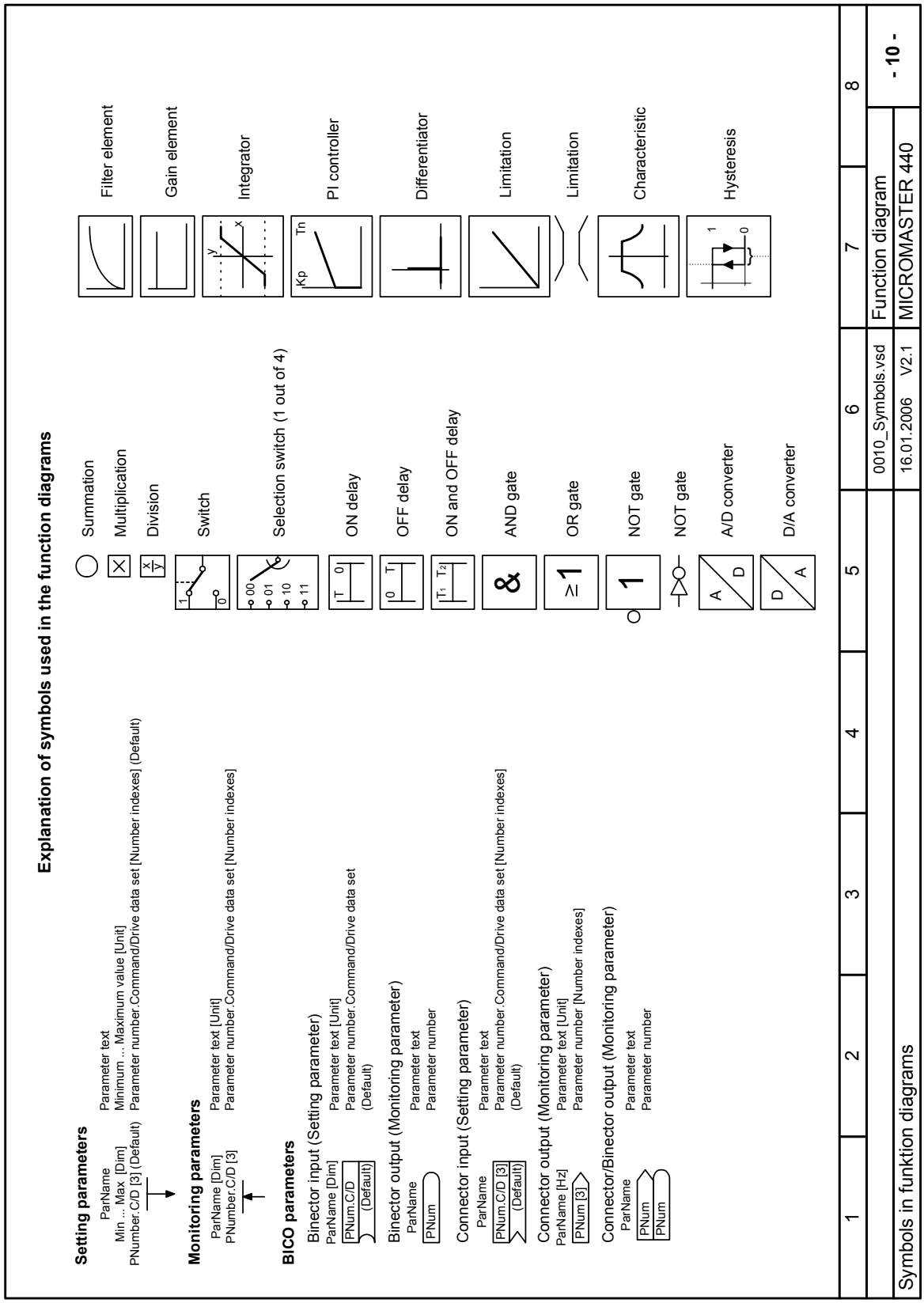

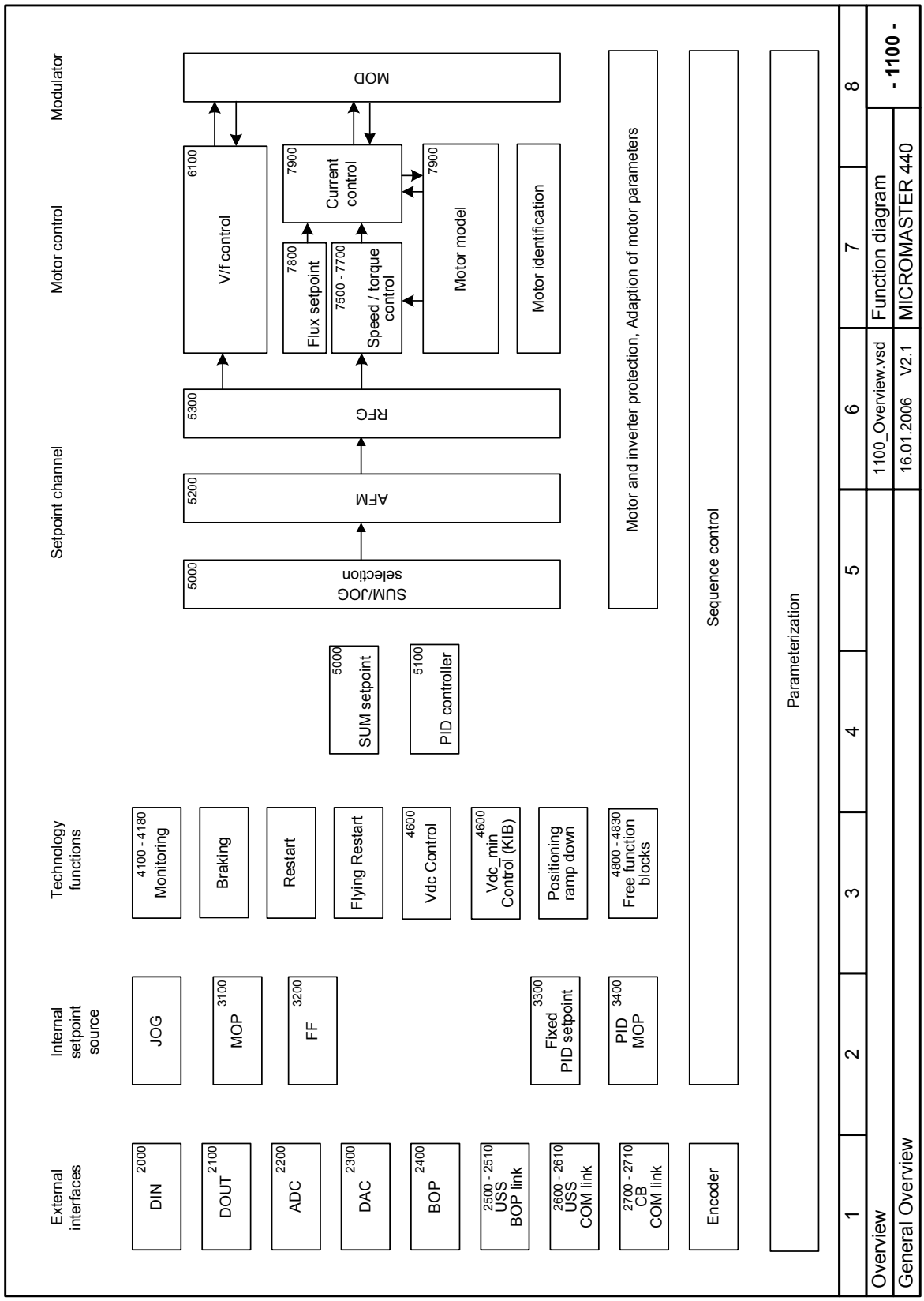
External interfaces
Internal setpoint source
Technology functions
Setpoint channel
Motor control
Modulator
2000 DIN
2100 DOUT
2200 ADC
2300 DAC
2400 BOP
2500 - 2510 USS BOP link
2600 - 2610 USS COM link
2700 - 2710 CB COM link
Encoder
JOG
3100 MOP
3200 FF
3300 Fixed PID setpoint
3400 PID MOP
4100 - 4180 Monitoring
Braking
Restart
Flying Restart
4600 Vdc Control
4600 Vdc_min Control (KIB)
Positioning ramp down
4800 - 4830 Free function blocks
Sequence control
Parameterization
5000 SUM setpoint
5100 PID controller
5000 SUM/JOG selection
5200 AFM
5300 RFG
6100 V/f control
7800 Flux setpoint
7900 Current control
7500 - 7700 Speed / torque control
7900 Motor model
Motor identification
MOD
Motor and inverter protection, Adaption of motor parameters
1
2
3
4
5
6
7
8
Overview
1100_Overview.vsd
Function diagram
- 1100 -
General Overview
16.01.2006 V2.1
MICROMASTER 440

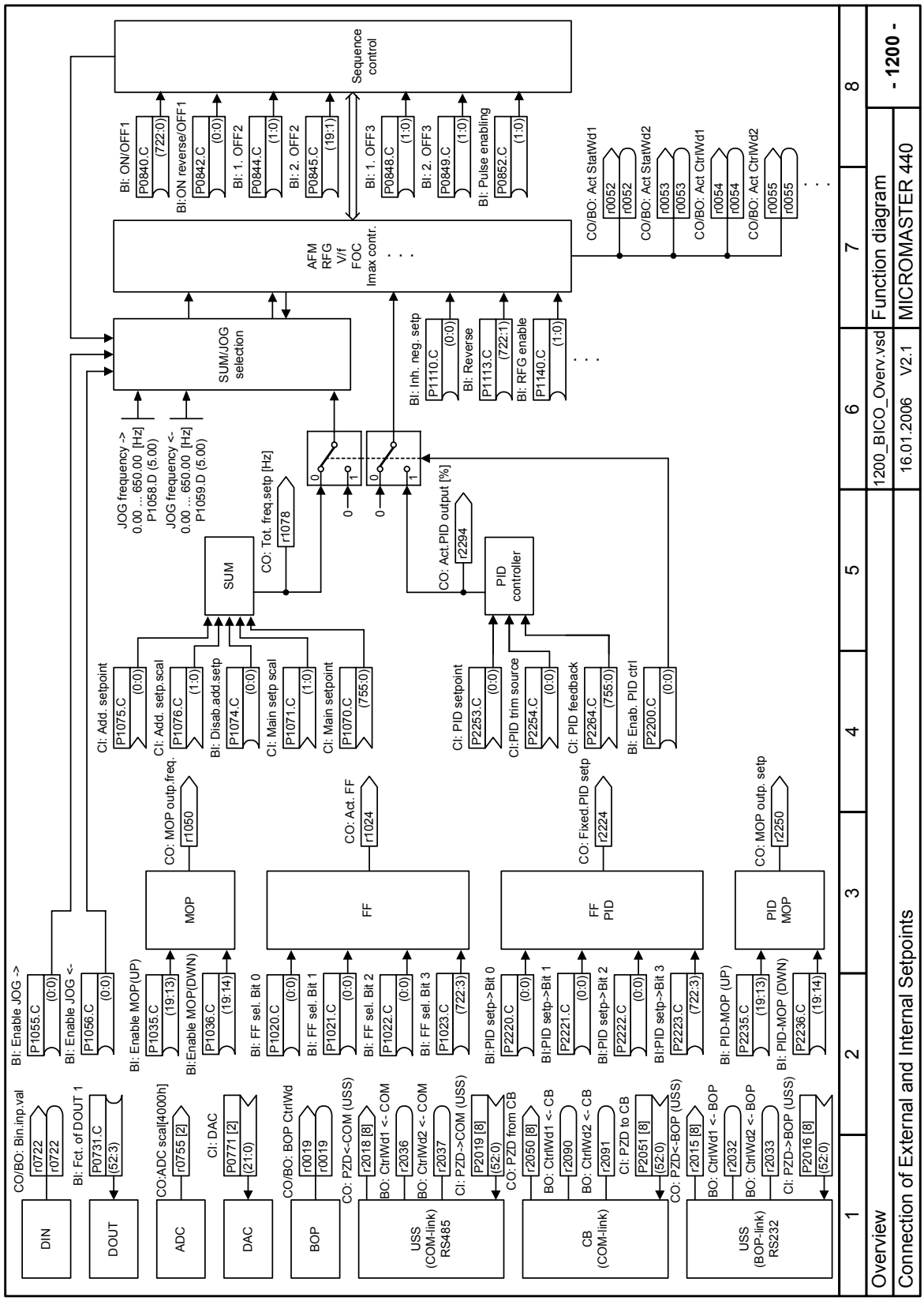
Sequence control
BI: ON/OFF1 P0840.C (722:0)
BI:ON reverse/OFF1 P0842.C (0:0)
BI: 1. OFF2 P0844.C (1:0)
BI: 2. OFF2 P0845.C (19:1)
BI: 1. OFF3 P0848.C (1:0)
BI: 2. OFF3 P0849.C (1:0)
BI: Pulse enabling P0852.C (1:0)
AFM
RFG
V/f
FOC
Imax contr.
CO/BO: Act StatWd1 r0052 r0052
CO/BO: Act StatWd2 r0053 r0053
CO/BO: Act CtrlWd1 r0054 r0054
CO/BO: Act CtrlWd2 r0055 r0055
SUM/JOG selection
BI: Inh. neg. setp P1110.C (0:0)
BI: Reverse P1113.C (722:1)
BI: RFG enable P1140.C (1:0)
JOG frequency -> 0.00 ... 650.00 [Hz] P1058.D (5.00)
JOG frequency <- 0.00 ... 650.00 [Hz] P1059.D (5.00)
SUM
CO: Tot. freq.setp [Hz] r1078
CO: Act.PID output [%] r2294
PID controller
CI: Add. setpoint P1075.C (0:0)
CI: Add. setp.scal P1076.C (1:0)
BI: Disab.add.setp P1074.C (0:0)
CI: Main setp scal P1071.C (1:0)
CI: Main setpoint P1070.C (755:0)
CI: PID setpoint P2253.C (0:0)
CI:PID trim source P2254.C (0:0)
CI: PID feedback P2264.C (755:0)
BI: Enab. PID ctrl P2200.C (0:0)
CO: MOP outp.freq. r1050
CO: Act. FF r1024
CO: Fixed.PID setp r2224
CO: MOP outp. setp r2250
MOP
FF
FF PID
PID MOP
BI: Enable JOG -> P1055.C (0:0)
BI: Enable JOG <- P1056.C (0:0)
BI: Enable MOP(UP) P1035.C (19:13)
BI:Enable MOP(DWN) P1036.C (19:14)
BI: FF sel. Bit 0 P1020.C (0:0)
BI: FF sel. Bit 1 P1021.C (0:0)
BI: FF sel. Bit 2 P1022.C (0:0)
BI: FF sel. Bit 3 P1023.C (722:3)
BI:PID setp->Bit 0 P2220.C (0:0)
BI:PID setp->Bit 1 P2221.C (0:0)
BI:PID setp->Bit 2 P2222.C (0:0)
BI:PID setp->Bit 3 P2223.C (722:3)
BI: PID-MOP (UP) P2235.C (19:13)
BI: PID-MOP (DWN) P2236.C (19:14)
CO/BO: Bin.inp.val r0722 r0722
BI: Fct. of DOUT 1 P0731.C (52:3)
CO:ADC scal[4000h] r0755 [2]
CI: DAC P0771 [2] (21:0)
CO/BO: BOP CtrlWd r0019 r0019
CO: PZD<-COM (USS) r2018 [8]
BO: CtrlWd1 <- COM r2036
BO: CtrlWd2 <- COM r2037
CI: PZD->COM (USS) P2019 [8] (52:0)
CO: PZD from CB r2050 [8]
BO: CtrlWd1 <- CB r2090
BO: CtrlWd2 <- CB r2091
CI: PZD to CB P2051 [8] (52:0)
CO: PZD<-BOP (USS) r2015 [8]
BO: CtrlWd1 <- BOP r2032
BO: CtrlWd2 <- BOP r2033
CI: PZD->BOP (USS) P2016 [8] (52:0)
DIN
DOUT
ADC
DAC
BOP
USS (COM-link) RS485
CB (COM-link)
USS (BOP-link) RS232
1 2 3 4 5 6 7 8
Overview
Connection of External and Internal Setpoints
1200_BICO_Overv.vsd
16.01.2006 V2.1
Function diagram
MICROMASTER 440
- 1200 -

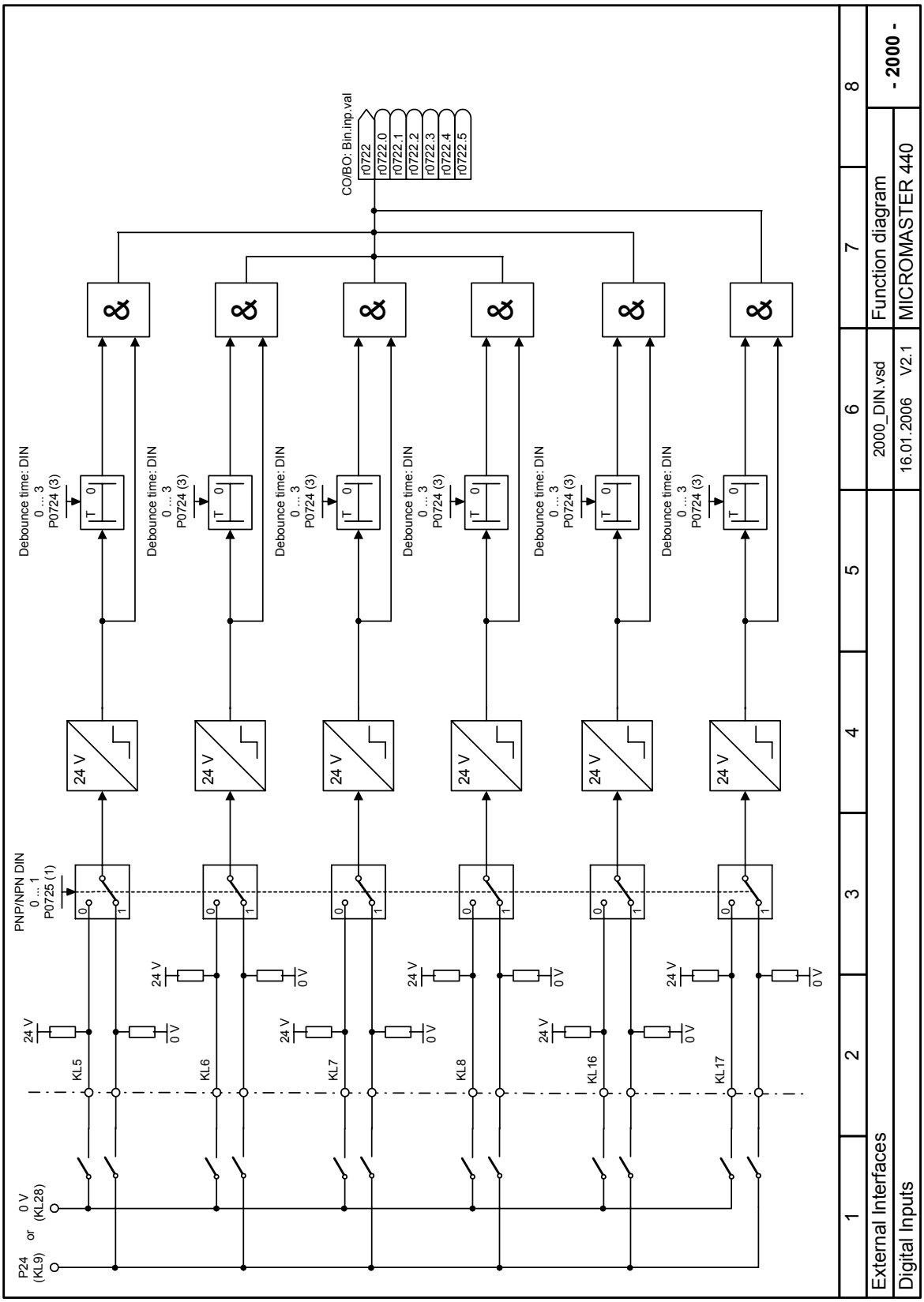
CO/BO: Bin.inp.val
r0722
r0722.0
r0722.1
r0722.2
r0722.3
r0722.4
r0722.5
Debounce time: DIN
0 ... 3
P0724 (3)
PNP/NPN DIN
0 ... 1
P0725 (1)
24 V
0 V
KL5
KL6
KL7
KL8
KL16
KL17
P24
(KL9)
or
0 V
(KL28)
1
2
3
4
5
6
7
8
External Interfaces
Digital Inputs
2000_DIN.vsd
16.01.2006
V2.1
Function diagram
MICROMASTER 440
- 2000 -

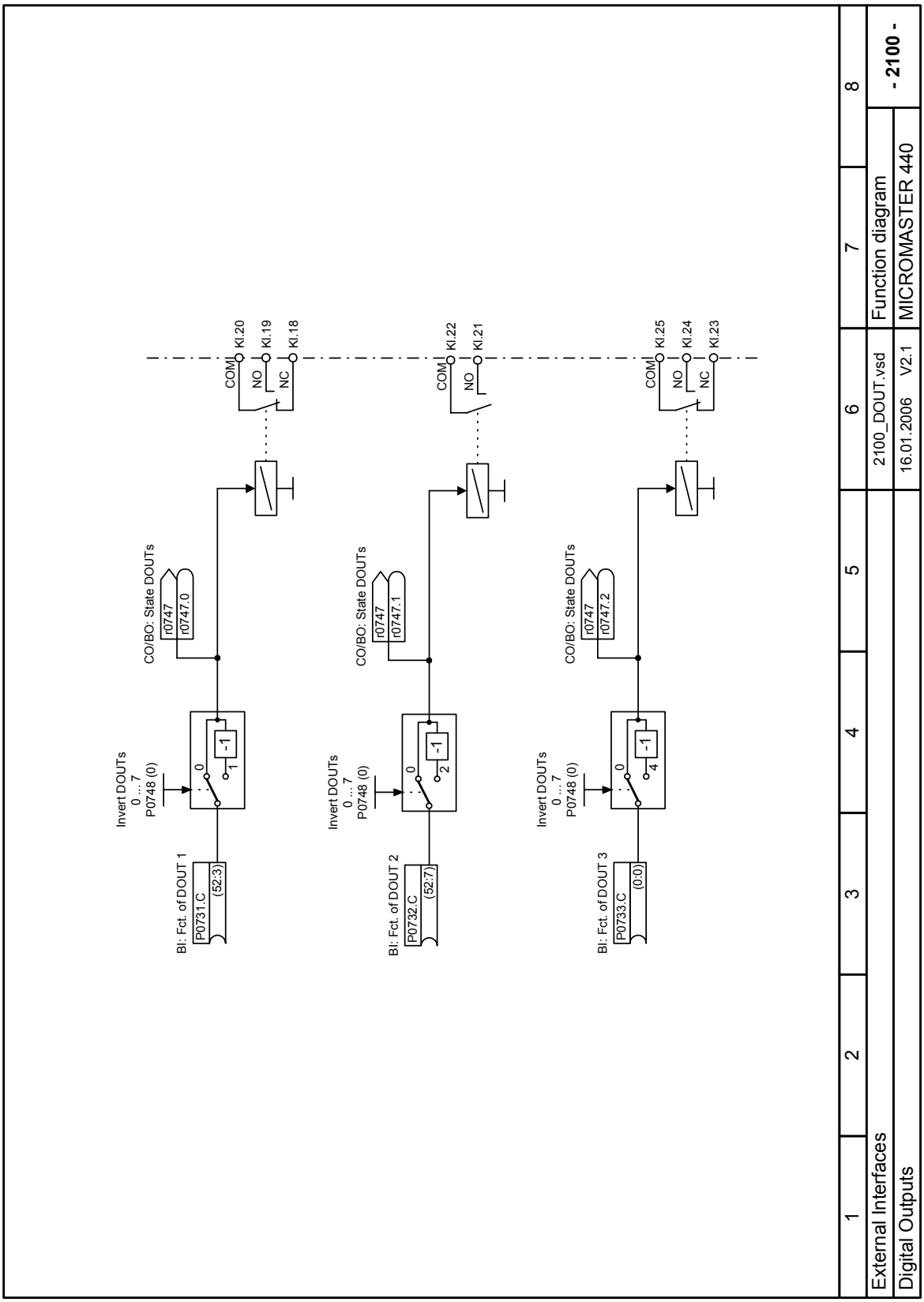
Invert DOUTs
0 ... 7
P0748 (0)
BI: Fct. of DOUT 1
P0731.C
(52:3)
CO/BO: State DOUTs
r0747
r0747.0
COM
NO
NC
KI.20
KI.19
KI.18
BI: Fct. of DOUT 2
P0732.C
(52:7)
r0747.1
KI.22
KI.21
BI: Fct. of DOUT 3
P0733.C
(0:0)
r0747.2
KI.25
KI.24
KI.23
-1
1
2
4
1 2 3 4 5 6 7 8
External Interfaces
Digital Outputs
2100_DOUT.vsd
16.01.2006 V2.1
Function diagram
MICROMASTER 440
- 2100 -

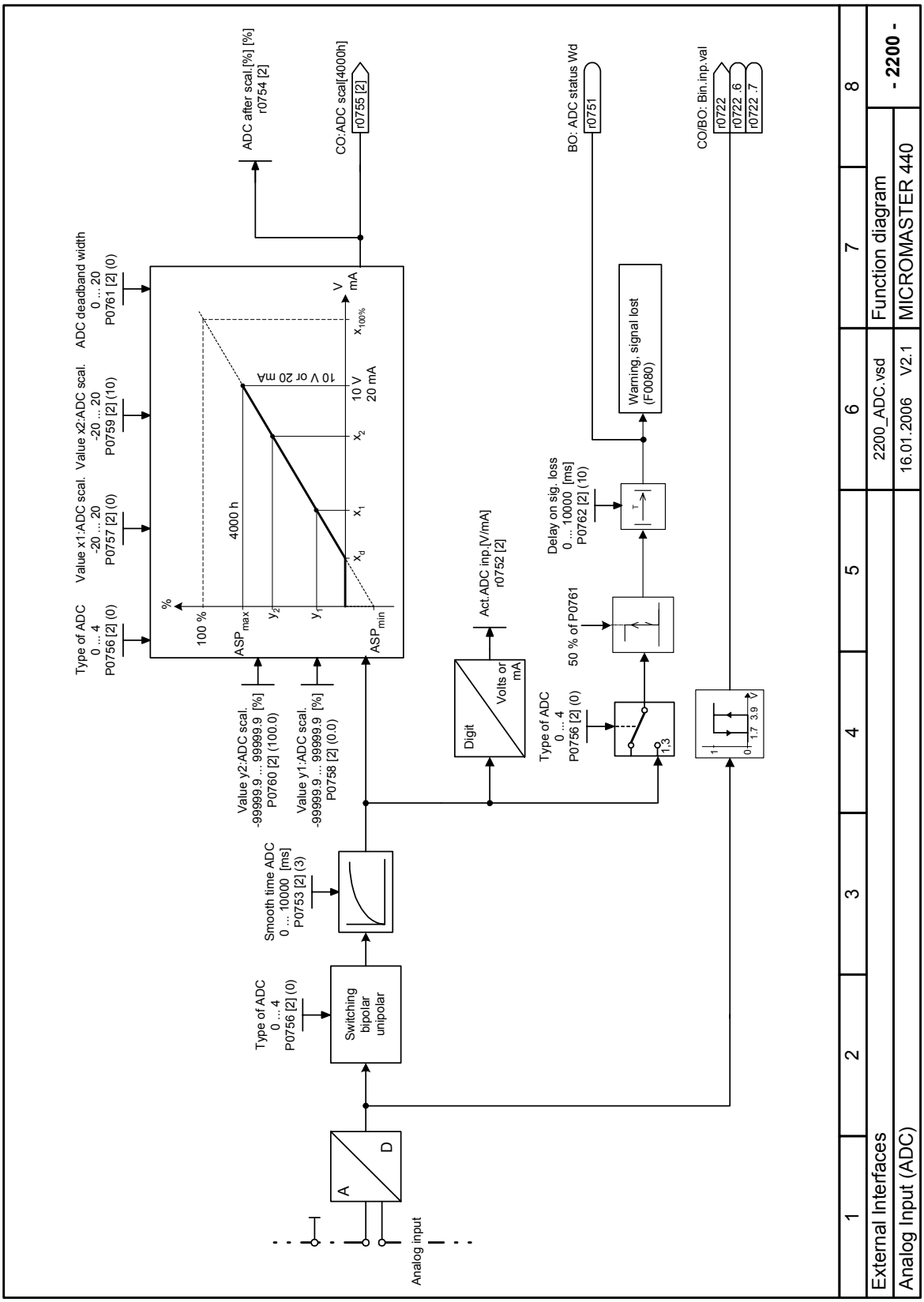
Analog input
A
D
Type of ADC
0 ... 4
P0756 [2] (0)
Switching
bipolar
unipolar
Smooth time ADC
0 ... 10000 [ms]
P0753 [2] (3)
Value y2:ADC scal.
-99999.9 ... 99999.9 [%]
P0760 [2] (100.0)
Value y1:ADC scal.
-99999.9 ... 99999.9 [%]
P0758 [2] (0.0)
Type of ADC
0 ... 4
P0756 [2] (0)
Value x1:ADC scal.
-20 ... 20
P0757 [2] (0)
Value x2:ADC scal.
-20 ... 20
P0759 [2] (10)
ADC deadband width
0 ... 20
P0761 [2] (0)
%
100 %
ASP max
y2
y1
ASP min
4000 h
xd
x1
x2
10 V or 20 mA
10 V
20 mA
x100%
V
mA
ADC after scal.[%] [%]
r0754 [2]
CO:ADC scal[4000h]
r0755 [2]
Digit
Volts or
mA
Act.ADC inp.[V/mA]
r0752 [2]
Type of ADC
0 ... 4
P0756 [2] (0)
1,3
50 % of P0761
Delay on sig. loss
0 ... 10000 [ms]
P0762 [2] (10)
Warning, signal lost
(F0080)
BO: ADC status Wd
r0751
CO/BO: Bin.inp.val
r0722
r0722 .6
r0722 .7
1
2
3
4
5
6
7
8
External Interfaces
Analog Input (ADC)
2200_ADC.vsd
16.01.2006 V2.1
Function diagram
MICROMASTER 440
- 2200 -

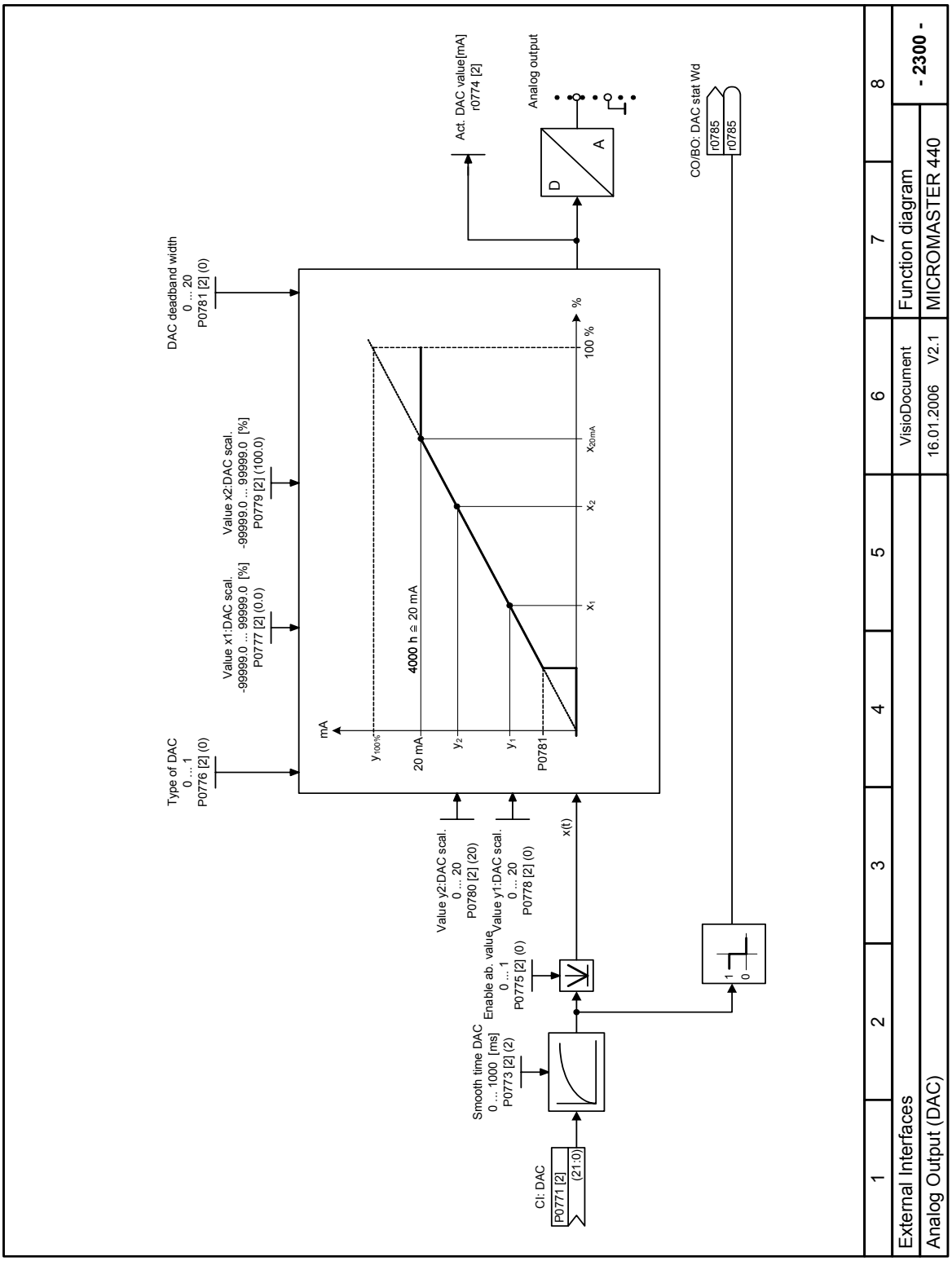
Type of DAC
0 ... 1
P0776 [2] (0)
DAC deadband width
0 ... 20
P0781 [2] (0)
Value x1:DAC scal.
-99999.0 ... 99999.0 [%]
P0777 [2] (0.0)
Value x2:DAC scal.
-99999.0 ... 99999.0 [%]
P0779 [2] (100.0)
mA
y100%
20 mA
y2
y1
P0781
4000 h ≙ 20 mA
x1
x2
x20mA
100 %
%
Act. DAC value[mA]
r0774 [2]
Analog output
D
A
CO/BO: DAC stat Wd
r0785
r0785
Value y2:DAC scal.
0 ... 20
P0780 [2] (20)
Value y1:DAC scal.
0 ... 20
P0778 [2] (0)
x(t)
Enable ab. value
0 ... 1
P0775 [2] (0)
Smooth time DAC
0 ... 1000 [ms]
P0773 [2] (2)
CI: DAC
P0771 [2]
(21:0)
1
0
1
2
3
4
5
6
7
8
External Interfaces
Analog Output (DAC)
VisioDocument
16.01.2006 V2.1
Function diagram
MICROMASTER 440
- 2300 -

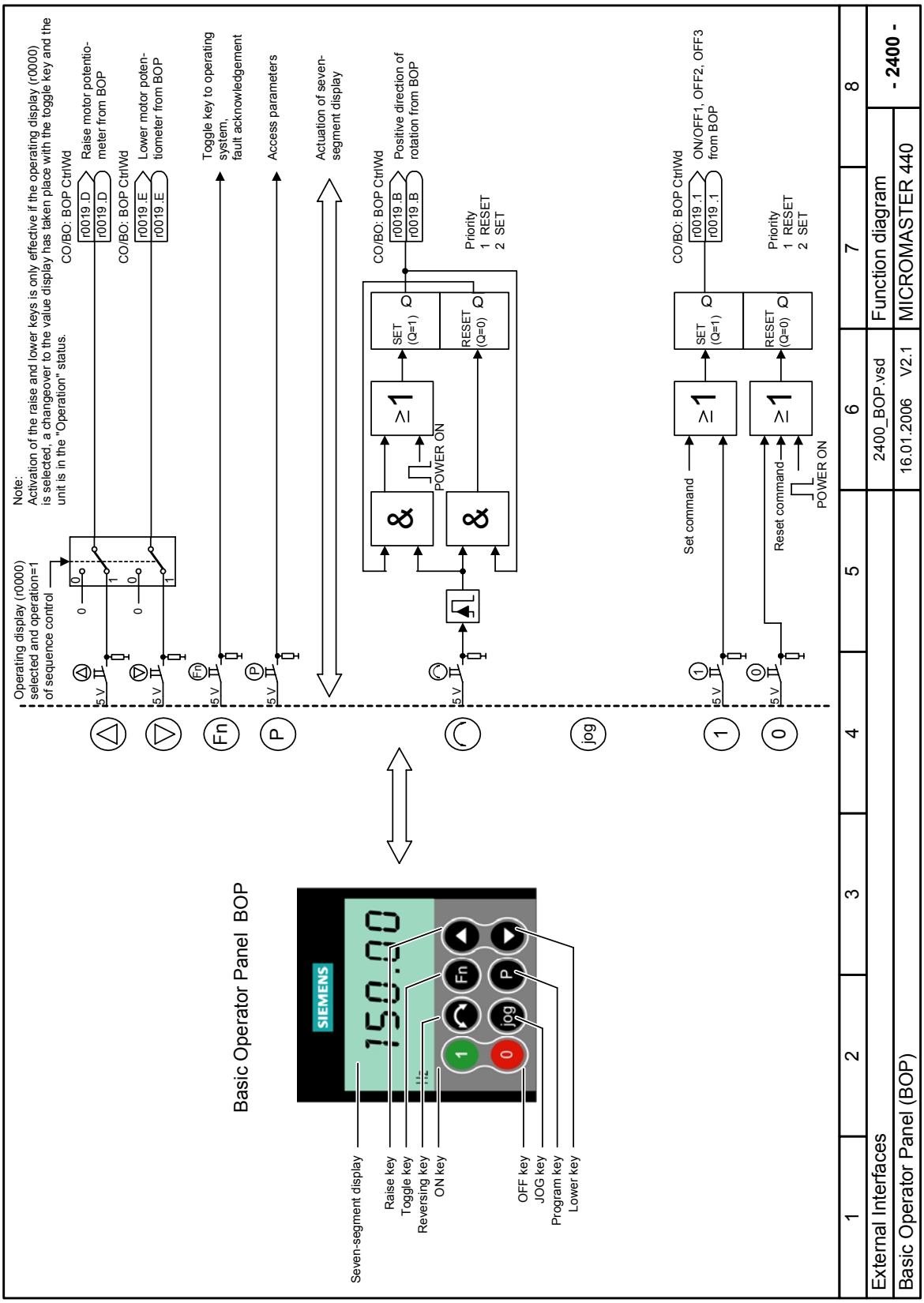
Note:
Activation of the raise and lower keys is only effective if the operating display (r0000) is selected, a changeover to the value display has taken place with the toggle key and the unit is in the "Operation" status.
Operating display (r0000) selected and operation=1 of sequence control
CO/BO: BOP CtrlWd
r0019.D
Raise motor potentio-meter from BOP
r0019.E
Lower motor poten-tiometer from BOP
Toggle key to operating system, fault acknowledgement
Access parameters
Actuation of seven-segment display
Positive direction of rotation from BOP
Priority
1 RESET
2 SET
SET (Q=1)
RESET (Q=0)
POWER ON
ON/OFF1, OFF2, OFF3 from BOP
Set command
Reset command
5 V
Basic Operator Panel BOP
SIEMENS
Seven-segment display
Raise key
Toggle key
Reversing key
ON key
OFF key
JOG key
Program key
Lower key
External Interfaces
Basic Operator Panel (BOP)
2400_BOP.vsd
16.01.2006 V2.1
Function diagram
MICROMASTER 440
- 2400 -

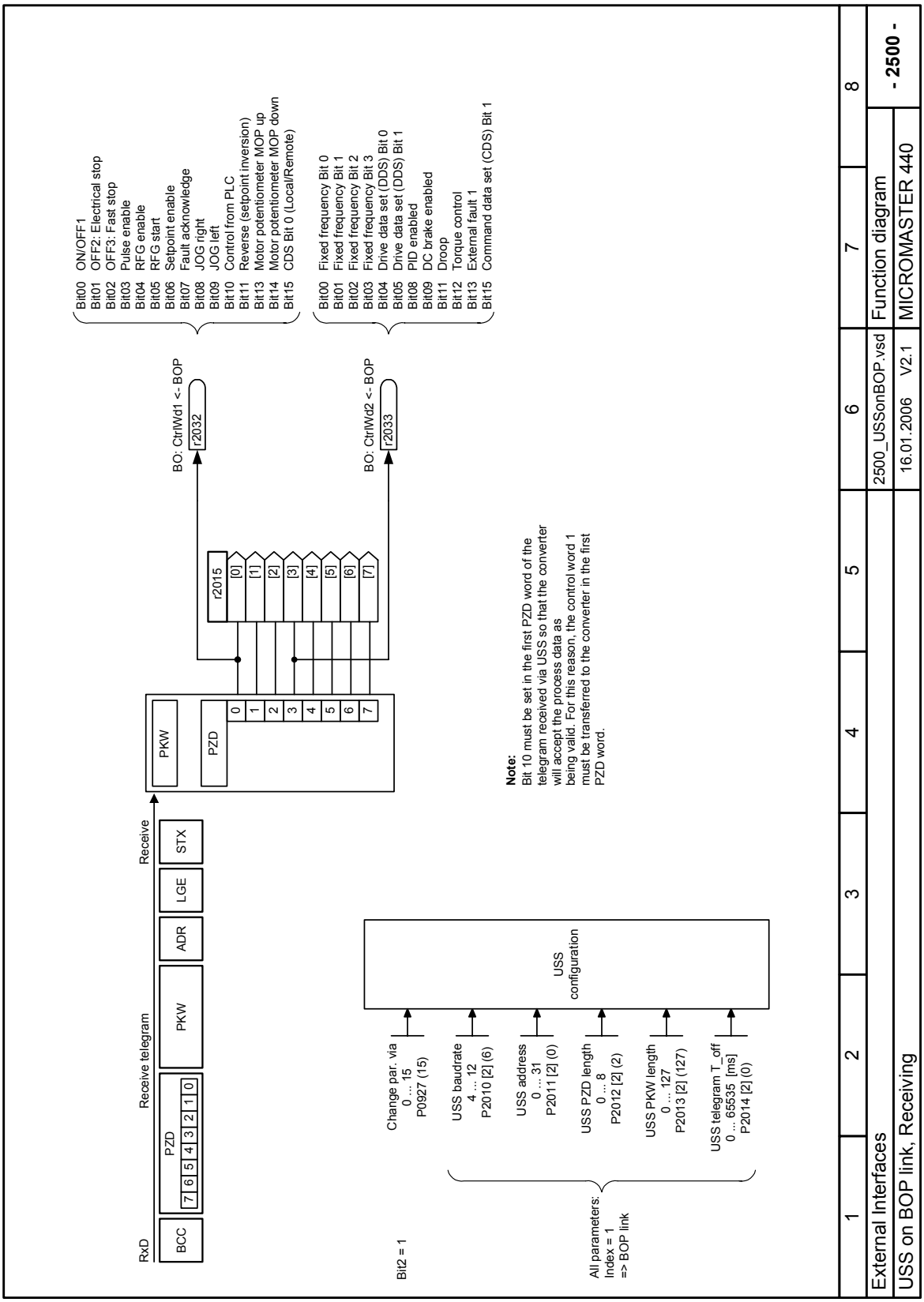
Bit00 ON/OFF1
Bit01 OFF2: Electrical stop
Bit02 OFF3: Fast stop
Bit03 Pulse enable
Bit04 RFG enable
Bit05 RFG start
Bit06 Setpoint enable
Bit07 Fault acknowledge
Bit08 JOG right
Bit09 JOG left
Bit10 Control from PLC
Bit11 Reverse (setpoint inversion)
Bit13 Motor potentiometer MOP up
Bit14 Motor potentiometer MOP down
Bit15 CDS Bit 0 (Local/Remote)
Bit00 Fixed frequency Bit 0
Bit01 Fixed frequency Bit 1
Bit02 Fixed frequency Bit 2
Bit03 Fixed frequency Bit 3
Bit04 Drive data set (DDS) Bit 0
Bit05 Drive data set (DDS) Bit 1
Bit08 PID enabled
Bit09 DC brake enabled
Bit11 Droop
Bit12 Torque control
Bit13 External fault 1
Bit15 Command data set (CDS) Bit 1
BO: CtrlWd1 <- BOP
r2032
BO: CtrlWd2 <- BOP
r2033
r2015
[0] [1] [2] [3] [4] [5] [6] [7]
PKW
PZD
0 1 2 3 4 5 6 7
Receive
STX
LGE
ADR
PKW
PZD
7 6 5 4 3 2 1 0
Receive telegram
BCC
RxD
Note:
Bit 10 must be set in the first PZD word of the telegram received via USS so that the converter will accept the process data as being valid. For this reason, the control word 1 must be transferred to the converter in the first PZD word.
USS configuration
Change par. via 0 ... 15 P0927 (15)
USS baudrate 4 ... 12 P2010 [2] (6)
USS address 0 ... 31 P2011 [2] (0)
USS PZD length 0 ... 8 P2012 [2] (2)
USS PKW length 0 ... 127 P2013 [2] (127)
USS telegram T_off 0 ... 65535 [ms] P2014 [2] (0)
Bit2 = 1
All parameters: Index = 1 => BOP link
1 2 3 4 5 6 7 8
External Interfaces
USS on BOP link, Receiving
2500_USSonBOP.vsd
16.01.2006 V2.1
Function diagram
MICROMASTER 440
- 2500 -

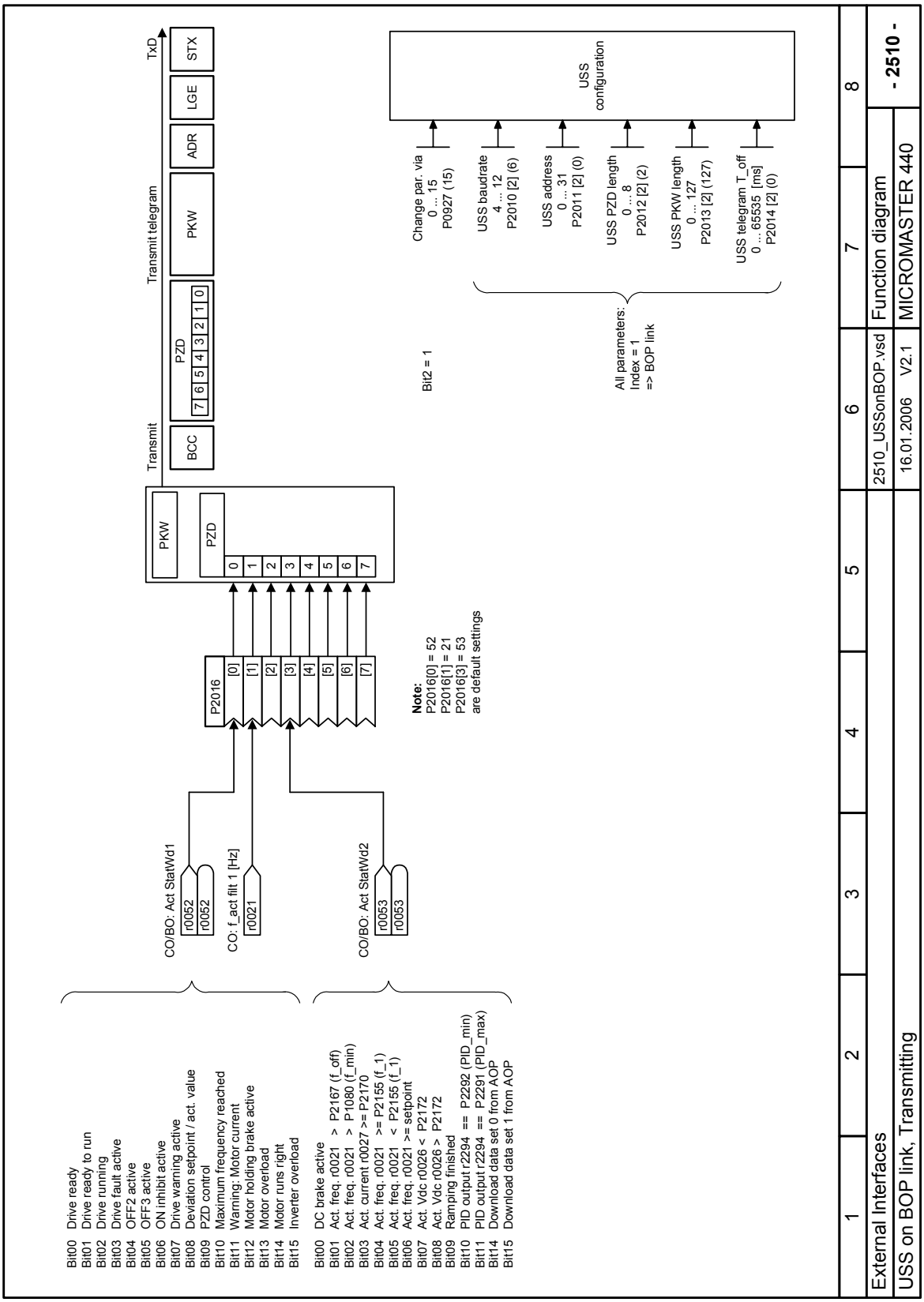
Bit00 Drive ready
Bit01 Drive ready to run
Bit02 Drive running
Bit03 Drive fault active
Bit04 OFF2 active
Bit05 OFF3 active
Bit06 ON inhibit active
Bit07 Drive warning active
Bit08 Deviation setpoint / act. value
Bit09 PZD control
Bit10 Maximum frequency reached
Bit11 Warning: Motor current
Bit12 Motor holding brake active
Bit13 Motor overload
Bit14 Motor runs right
Bit15 Inverter overload
Bit00 DC brake active
Bit01 Act. freq. r0021 > P2167 (f_off)
Bit02 Act. freq. r0021 > P1080 (f_min)
Bit03 Act. current r0027 >= P2170
Bit04 Act. freq. r0021 >= P2155 (f_1)
Bit05 Act. freq. r0021 < P2155 (f_1)
Bit06 Act. freq. r0021 >= setpoint
Bit07 Act. Vdc r0026 < P2172
Bit08 Act. Vdc r0026 > P2172
Bit09 Ramping finished
Bit10 PID output r2294 == P2292 (PID_min)
Bit11 PID output r2294 == P2291 (PID_max)
Bit14 Download data set 0 from AOP
Bit15 Download data set 1 from AOP
CO/BO: Act StatWd1
r0052
r0052
CO: f_act filt 1 [Hz]
r0021
CO/BO: Act StatWd2
r0053
r0053
P2016
[0]
[1]
[2]
[3]
[4]
[5]
[6]
[7]
PKW
PZD
0
1
2
3
4
5
6
7
Note:
P2016[0] = 52
P2016[1] = 21
P2016[3] = 53
are default settings
Transmit
Transmit telegram
TxD
BCC
PZD
7 6 5 4 3 2 1 0
PKW
ADR
LGE
STX
Bit2 = 1
Change par. via
0 ... 15
P0927 (15)
USS baudrate
4 ... 12
P2010 [2] (6)
USS address
0 ... 31
P2011 [2] (0)
USS PZD length
0 ... 8
P2012 [2] (2)
USS PKW length
0 ... 127
P2013 [2] (127)
USS telegram T_off
0 ... 65535 [ms]
P2014 [2] (0)
USS
configuration
All parameters:
Index = 1
=> BOP link
1
2
3
4
5
6
7
8
External Interfaces
2510_USSonBOP.vsd
Function diagram
- 2510 -
USS on BOP link, Transmitting
16.01.2006 V2.1
MICROMASTER 440

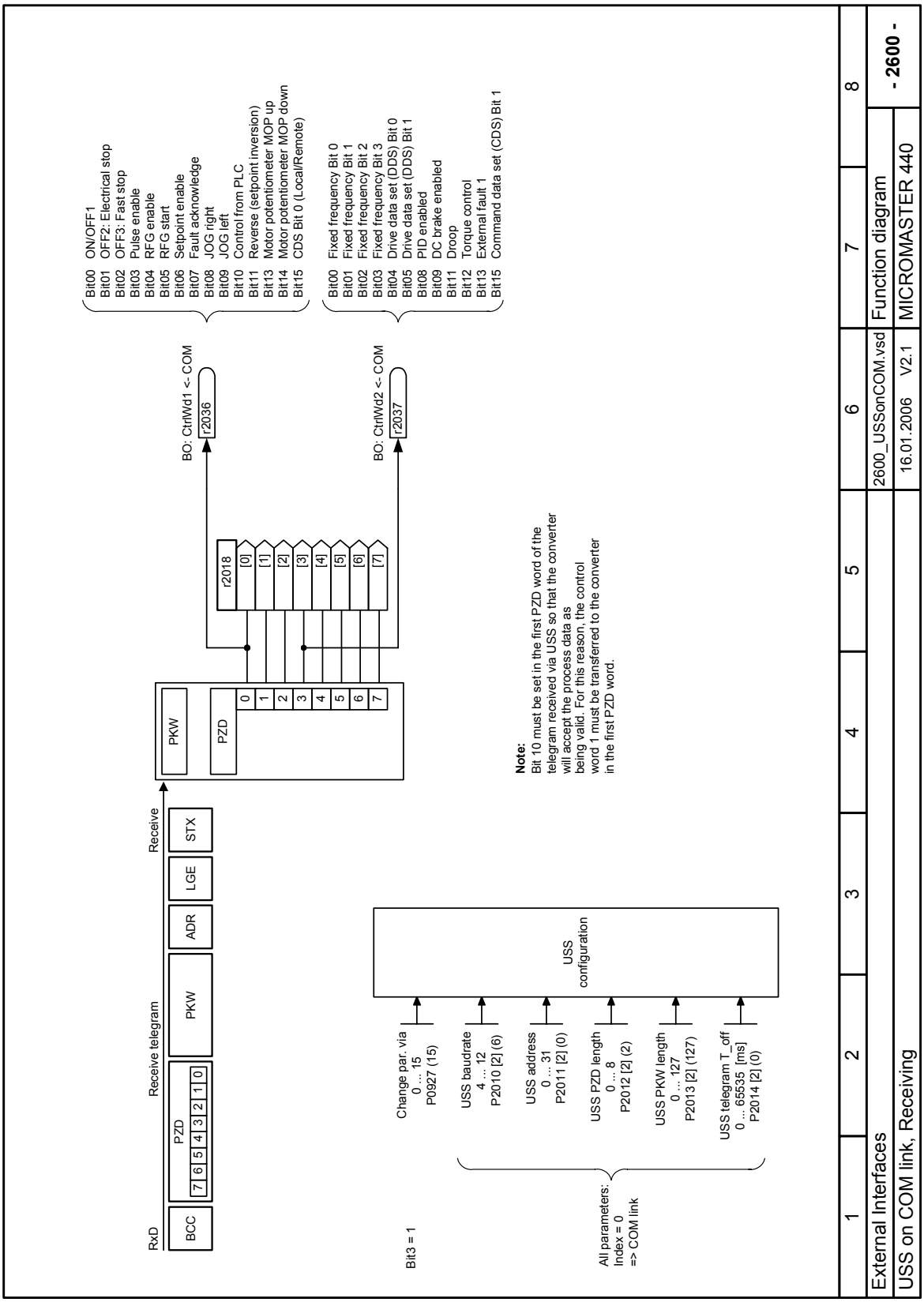
Bit00 ON/OFF1
Bit01 OFF2: Electrical stop
Bit02 OFF3: Fast stop
Bit03 Pulse enable
Bit04 RFG enable
Bit05 RFG start
Bit06 Setpoint enable
Bit07 Fault acknowledge
Bit08 JOG right
Bit09 JOG left
Bit10 Control from PLC
Bit11 Reverse (setpoint inversion)
Bit13 Motor potentiometer MOP up
Bit14 Motor potentiometer MOP down
Bit15 CDS Bit 0 (Local/Remote)
Bit00 Fixed frequency Bit 0
Bit01 Fixed frequency Bit 1
Bit02 Fixed frequency Bit 2
Bit03 Fixed frequency Bit 3
Bit04 Drive data set (DDS) Bit 0
Bit05 Drive data set (DDS) Bit 1
Bit08 PID enabled
Bit09 DC brake enabled
Bit11 Droop
Bit12 Torque control
Bit13 External fault 1
Bit15 Command data set (CDS) Bit 1
BO: CtrlWd1 <- COM
r2036
BO: CtrlWd2 <- COM
r2037
r2018
[0]
[1]
[2]
[3]
[4]
[5]
[6]
[7]
PKW
PZD
0
1
2
3
4
5
6
7
Note:
Bit 10 must be set in the first PZD word of the telegram received via USS so that the converter will accept the process data as being valid. For this reason, the control word 1 must be transferred to the converter in the first PZD word.
Receive
STX
LGE
ADR
PKW
PZD
BCC
Receive telegram
RxD
7 6 5 4 3 2 1 0
USS configuration
Change par. via 0 ... 15 P0927 (15)
USS baudrate 4 ... 12 P2010 [2] (6)
USS address 0 ... 31 P2011 [2] (0)
USS PZD length 0 ... 8 P2012 [2] (2)
USS PKW length 0 ... 127 P2013 [2] (127)
USS telegram T_off 0 ... 65535 [ms] P2014 [2] (0)
Bit3 = 1
All parameters: Index = 0 => COM link
1
2
3
4
5
6
7
8
External Interfaces
2600_USSonCOM.vsd
Function diagram
- 2600 -
USS on COM link, Receiving
16.01.2006 V2.1
MICROMASTER 440

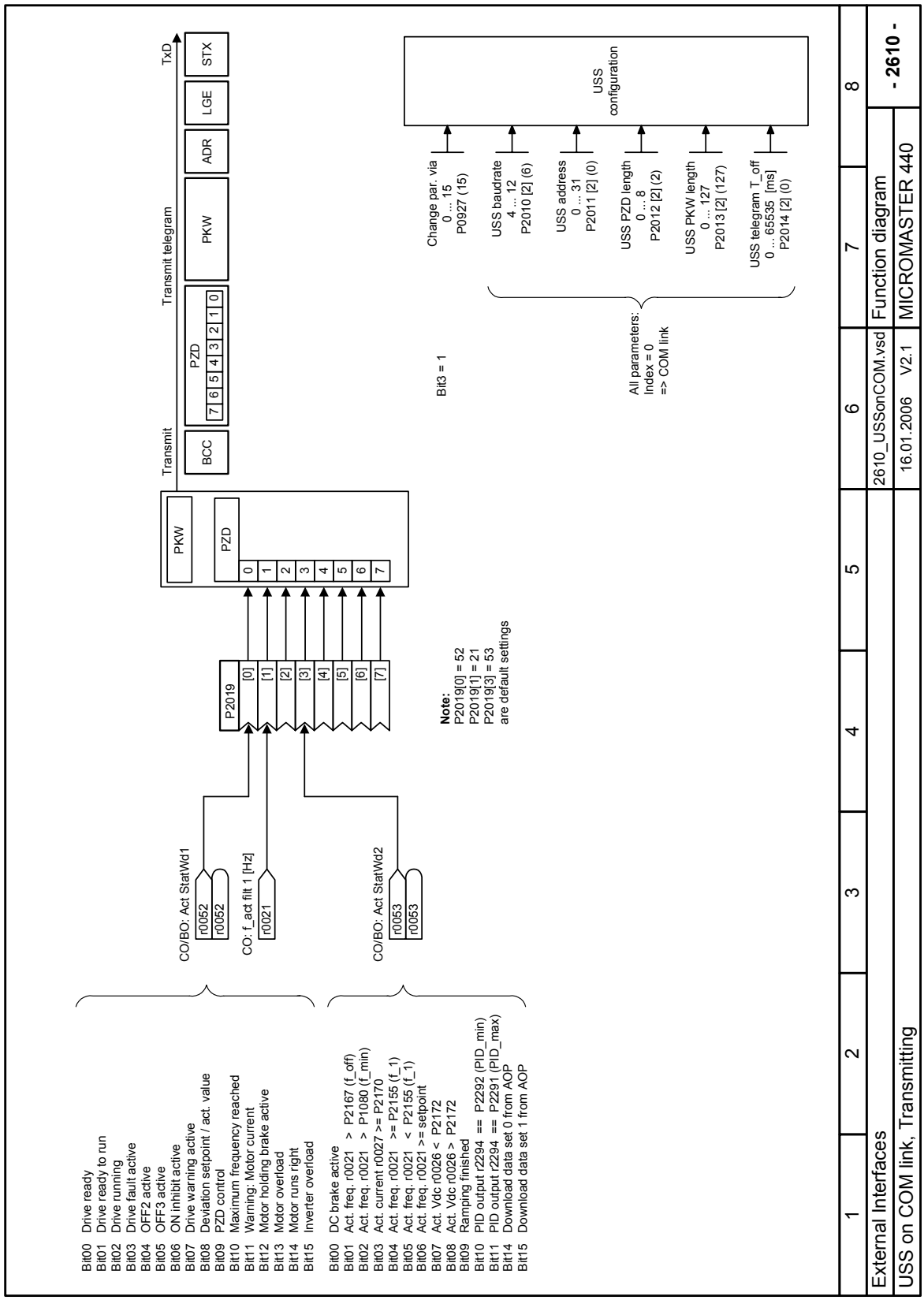
Bit00 Drive ready
Bit01 Drive ready to run
Bit02 Drive running
Bit03 Drive fault active
Bit04 OFF2 active
Bit05 OFF3 active
Bit06 ON inhibit active
Bit07 Drive warning active
Bit08 Deviation setpoint / act. value
Bit09 PZD control
Bit10 Maximum frequency reached
Bit11 Warning: Motor current
Bit12 Motor holding brake active
Bit13 Motor overload
Bit14 Motor runs right
Bit15 Inverter overload
Bit00 DC brake active
Bit01 Act. freq. r0021 > P2167 (f_off)
Bit02 Act. freq. r0021 > P1080 (f_min)
Bit03 Act. current r0027 >= P2170
Bit04 Act. freq. r0021 >= P2155 (f_1)
Bit05 Act. freq. r0021 < P2155 (f_1)
Bit06 Act. freq. r0021 >= setpoint
Bit07 Act. Vdc r0026 < P2172
Bit08 Act. Vdc r0026 > P2172
Bit09 Ramping finished
Bit10 PID output r2294 == P2292 (PID_min)
Bit11 PID output r2294 == P2291 (PID_max)
Bit14 Download data set 0 from AOP
Bit15 Download data set 1 from AOP
CO/BO: Act StatWd1
r0052
r0052
CO: f_act filt 1 [Hz]
r0021
CO/BO: Act StatWd2
r0053
r0053
P2019
[0]
[1]
[2]
[3]
[4]
[5]
[6]
[7]
Note:
P2019[0] = 52
P2019[1] = 21
P2019[3] = 53
are default settings
PKW
PZD
0
1
2
3
4
5
6
7
Transmit
Transmit telegram
BCC
PZD
7 6 5 4 3 2 1 0
PKW
ADR
LGE
STX
TxD
Bit3 = 1
Change par. via
0 ... 15
P0927 (15)
USS baudrate
4 ... 12
P2010 [2] (6)
USS address
0 ... 31
P2011 [2] (0)
USS PZD length
0 ... 8
P2012 [2] (2)
USS PKW length
0 ... 127
P2013 [2] (127)
USS telegram T_off
0 ... 65535 [ms]
P2014 [2] (0)
All parameters:
Index = 0
=> COM link
USS
configuration
1
2
3
4
5
6
7
8
External Interfaces
2610_USSonCOM.vsd
Function diagram
- 2610 -
USS on COM link, Transmitting
16.01.2006 V2.1
MICROMASTER 440

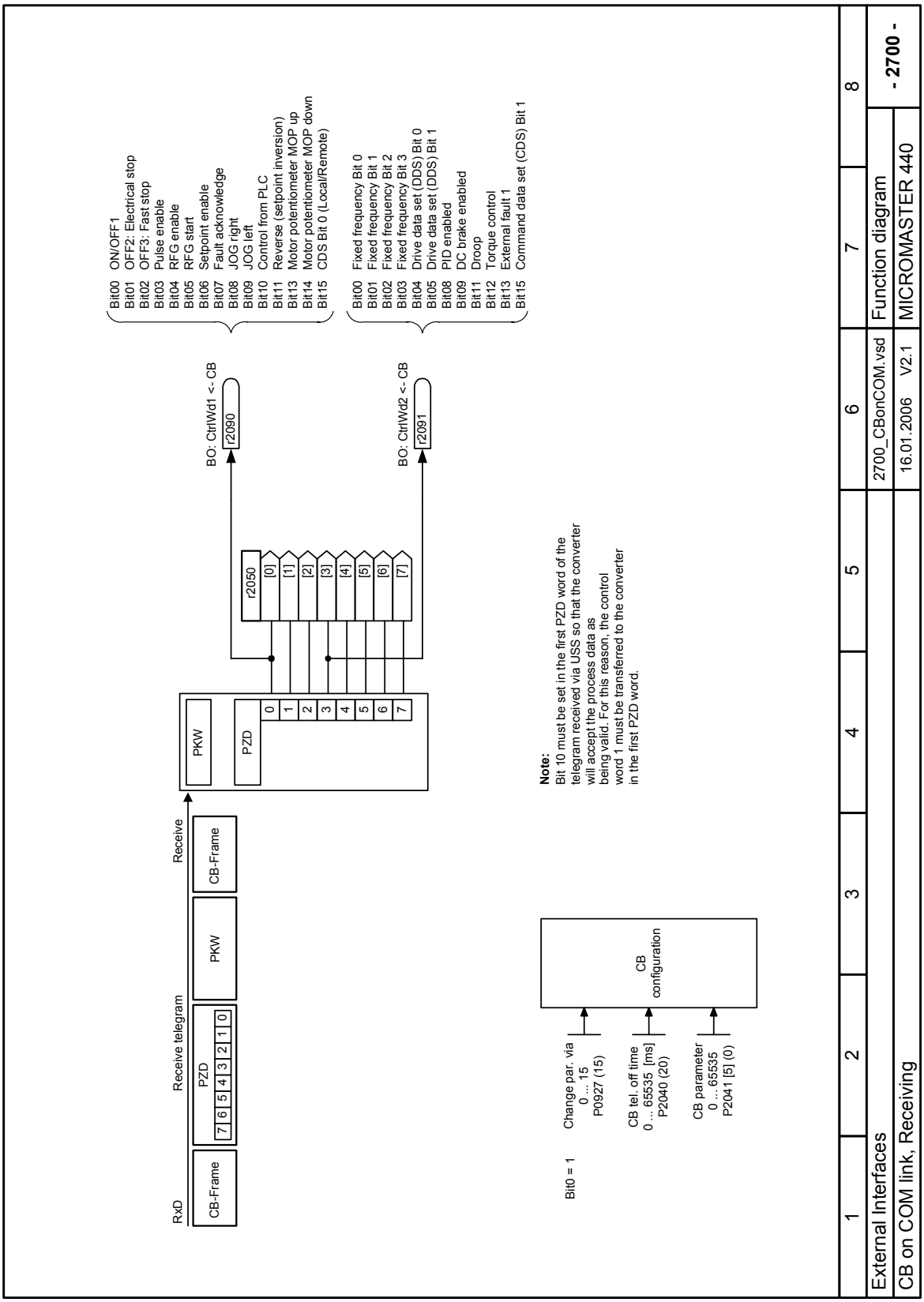
Bit00 ON/OFF1
Bit01 OFF2: Electrical stop
Bit02 OFF3: Fast stop
Bit03 Pulse enable
Bit04 RFG enable
Bit05 RFG start
Bit06 Setpoint enable
Bit07 Fault acknowledge
Bit08 JOG right
Bit09 JOG left
Bit10 Control from PLC
Bit11 Reverse (setpoint inversion)
Bit13 Motor potentiometer MOP up
Bit14 Motor potentiometer MOP down
Bit15 CDS Bit 0 (Local/Remote)
Bit00 Fixed frequency Bit 0
Bit01 Fixed frequency Bit 1
Bit02 Fixed frequency Bit 2
Bit03 Fixed frequency Bit 3
Bit04 Drive data set (DDS) Bit 0
Bit05 Drive data set (DDS) Bit 1
Bit08 PID enabled
Bit09 DC brake enabled
Bit11 Droop
Bit12 Torque control
Bit13 External fault 1
Bit15 Command data set (CDS) Bit 1
BO: CtrlWd1 <- CB
r2090
BO: CtrlWd2 <- CB
r2091
r2050
[0]
[1]
[2]
[3]
[4]
[5]
[6]
[7]
PKW
PZD
0
1
2
3
4
5
6
7
Receive
CB-Frame
PKW
CB-Frame
Receive telegram
PZD
7 6 5 4 3 2 1 0
RxD
CB-Frame
Note:
Bit 10 must be set in the first PZD word of the telegram received via USS so that the converter will accept the process data as being valid. For this reason, the control word 1 must be transferred to the converter in the first PZD word.
Bit0 = 1
Change par. via 0 ... 15 P0927 (15)
CB tel. off time 0 ... 65535 [ms] P2040 (20)
CB parameter 0 ... 65535 P2041 [5] (0)
CB configuration
1
2
3
4
5
6
7
8
External Interfaces
2700_CBonCOM.vsd
Function diagram
- 2700 -
CB on COM link, Receiving
16.01.2006 V2.1
MICROMASTER 440

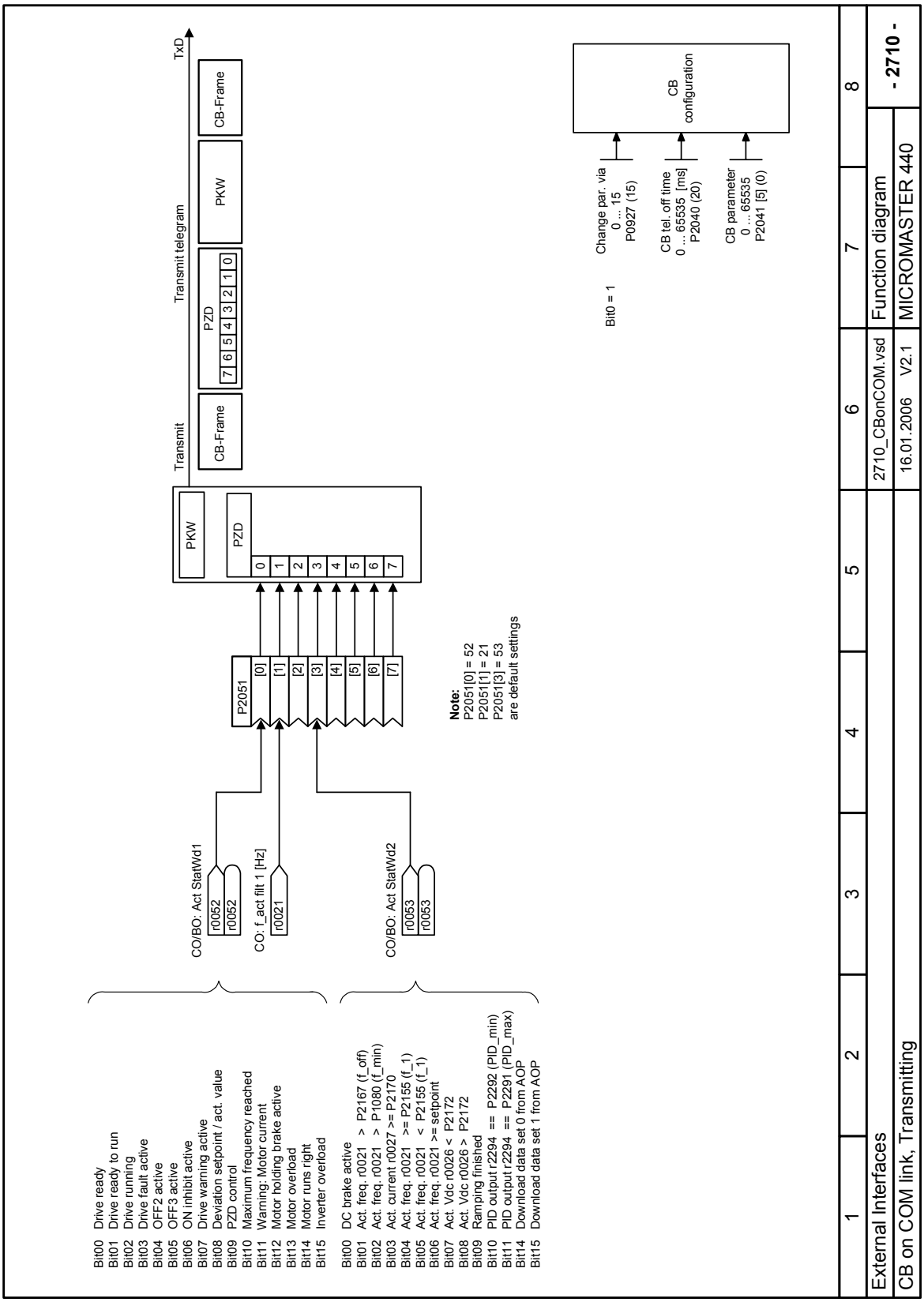
Bit00 Drive ready
Bit01 Drive ready to run
Bit02 Drive running
Bit03 Drive fault active
Bit04 OFF2 active
Bit05 OFF3 active
Bit06 ON inhibit active
Bit07 Drive warning active
Bit08 Deviation setpoint / act. value
Bit09 PZD control
Bit10 Maximum frequency reached
Bit11 Warning: Motor current
Bit12 Motor holding brake active
Bit13 Motor overload
Bit14 Motor runs right
Bit15 Inverter overload
Bit00 DC brake active
Bit01 Act. freq. r0021 > P2167 (f_off)
Bit02 Act. freq. r0021 > P1080 (f_min)
Bit03 Act. current r0027 >= P2170
Bit04 Act. freq. r0021 >= P2155 (f_1)
Bit05 Act. freq. r0021 < P2155 (f_1)
Bit06 Act. freq. r0021 >= setpoint
Bit07 Act. Vdc r0026 < P2172
Bit08 Act. Vdc r0026 > P2172
Bit09 Ramping finished
Bit10 PID output r2294 == P2292 (PID_min)
Bit11 PID output r2294 == P2291 (PID_max)
Bit14 Download data set 0 from AOP
Bit15 Download data set 1 from AOP
CO/BO: Act StatWd1
r0052
r0052
CO: f_act filt 1 [Hz]
r0021
CO/BO: Act StatWd2
r0053
r0053
P2051
[0]
[1]
[2]
[3]
[4]
[5]
[6]
[7]
PKW
PZD
0
1
2
3
4
5
6
7
Note:
P2051[0] = 52
P2051[1] = 21
P2051[3] = 53
are default settings
Transmit
Transmit telegram
TxD
CB-Frame
PZD
7 6 5 4 3 2 1 0
PKW
CB-Frame
Bit0 = 1
Change par. via
0 ... 15
P0927 (15)
CB tel. off time
0 ... 65535 [ms]
P2040 (20)
CB parameter
0 ... 65535
P2041 [5] (0)
CB
configuration
1
2
3
4
5
6
7
8
External Interfaces
2710_CBonCOM.vsd
Function diagram
- 2710 -
CB on COM link, Transmitting
16.01.2006 V2.1
MICROMASTER 440

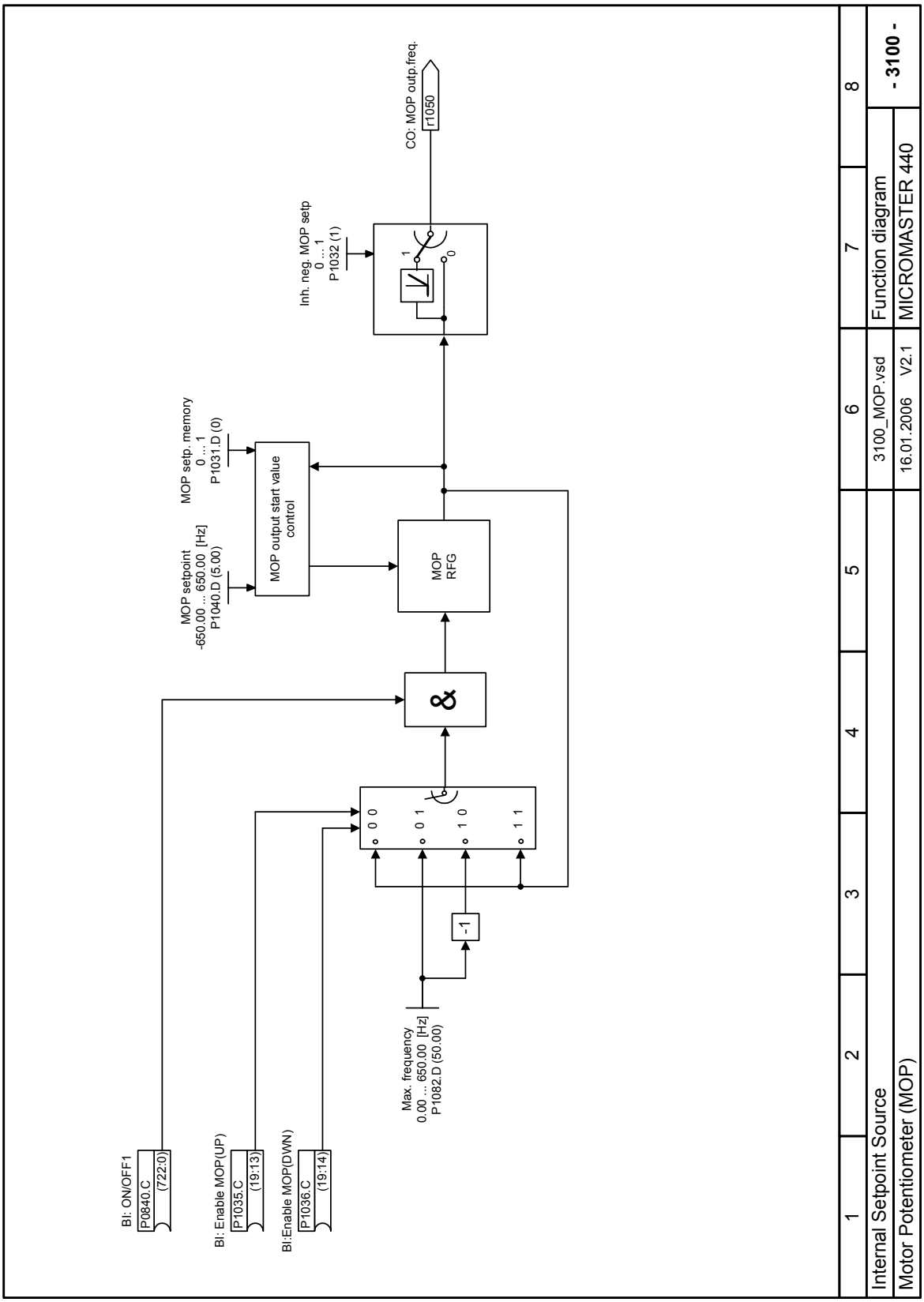
BI: ON/OFF1
P0840.C
(722:0)
BI: Enable MOP(UP)
P1035.C
(19:13)
BI:Enable MOP(DWN)
P1036.C
(19:14)
Max. frequency
0.00 ... 650.00 [Hz]
P1082.D (50.00)
-1
0 0
0 1
1 0
1 1
&
MOP setpoint
-650.00 ... 650.00 [Hz]
P1040.D (5.00)
MOP setp. memory
0 ... 1
P1031.D (0)
MOP output start value control
MOP RFG
Inh. neg. MOP setp
0 ... 1
P1032 (1)
1
0
CO: MOP outp.freq.
r1050
1
2
3
4
5
6
7
8
Internal Setpoint Source
Motor Potentiometer (MOP)
3100_MOP.vsd
16.01.2006 V2.1
Function diagram
MICROMASTER 440
- 3100 -

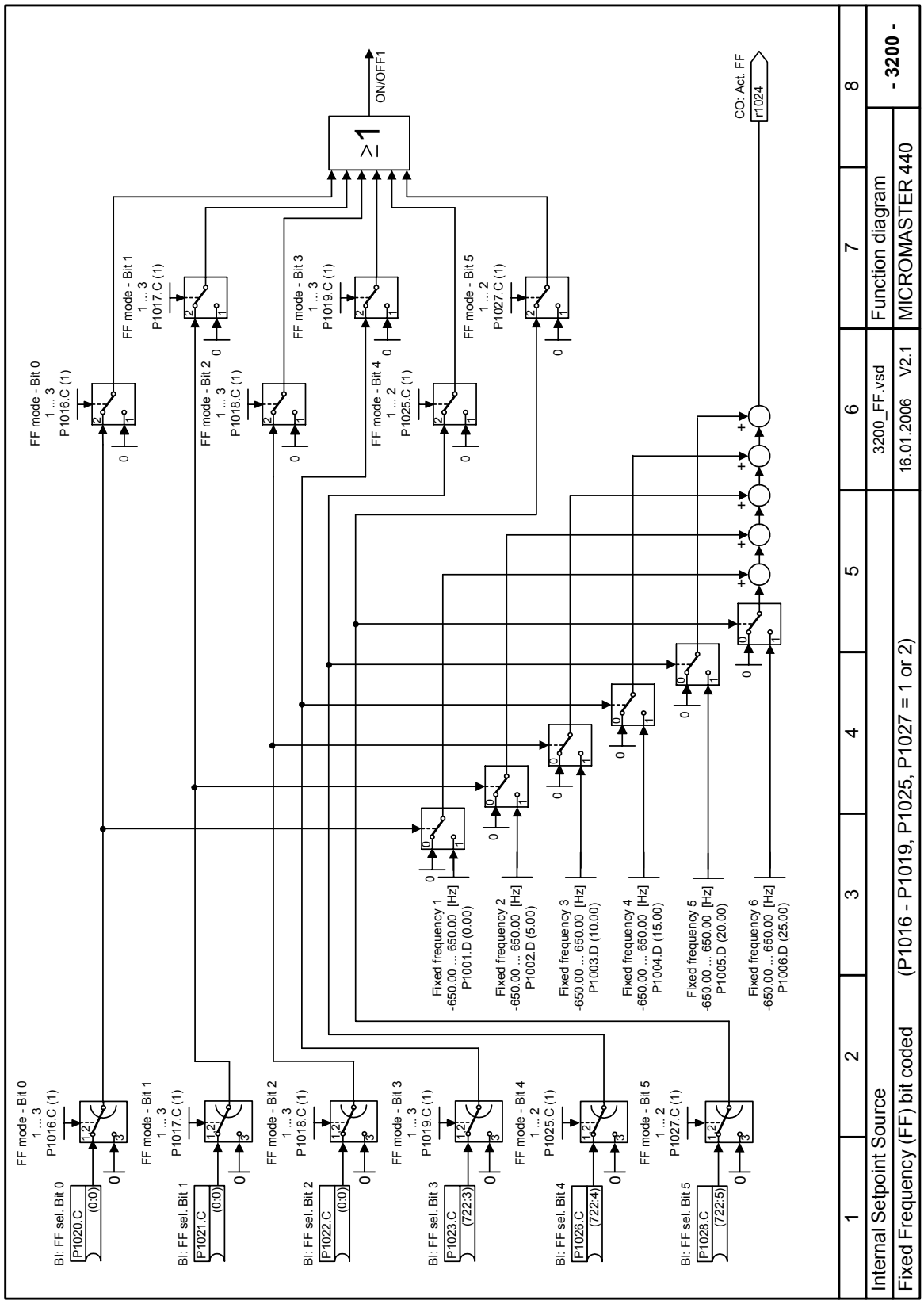
BI: FF sel. Bit 0
P1020.C
(0:0)
FF mode - Bit 0
1 ... 3
P1016.C (1)
BI: FF sel. Bit 1
P1021.C
(0:0)
FF mode - Bit 1
1 ... 3
P1017.C (1)
BI: FF sel. Bit 2
P1022.C
(0:0)
FF mode - Bit 2
1 ... 3
P1018.C (1)
BI: FF sel. Bit 3
P1023.C
(722:3)
FF mode - Bit 3
1 ... 3
P1019.C (1)
BI: FF sel. Bit 4
P1026.C
(722:4)
FF mode - Bit 4
1 ... 2
P1025.C (1)
BI: FF sel. Bit 5
P1028.C
(722:5)
FF mode - Bit 5
1 ... 2
P1027.C (1)
Fixed frequency 1
-650.00 ... 650.00 [Hz]
P1001.D (0.00)
Fixed frequency 2
-650.00 ... 650.00 [Hz]
P1002.D (5.00)
Fixed frequency 3
-650.00 ... 650.00 [Hz]
P1003.D (10.00)
Fixed frequency 4
-650.00 ... 650.00 [Hz]
P1004.D (15.00)
Fixed frequency 5
-650.00 ... 650.00 [Hz]
P1005.D (20.00)
Fixed frequency 6
-650.00 ... 650.00 [Hz]
P1006.D (25.00)
≥1
ON/OFF1
CO: Act. FF
r1024
1
2
3
4
5
6
7
8
Internal Setpoint Source
Fixed Frequency (FF) bit coded
(P1016 - P1019, P1025, P1027 = 1 or 2)
3200_FF.vsd
16.01.2006 V2.1
Function diagram
MICROMASTER 440
- 3200 -

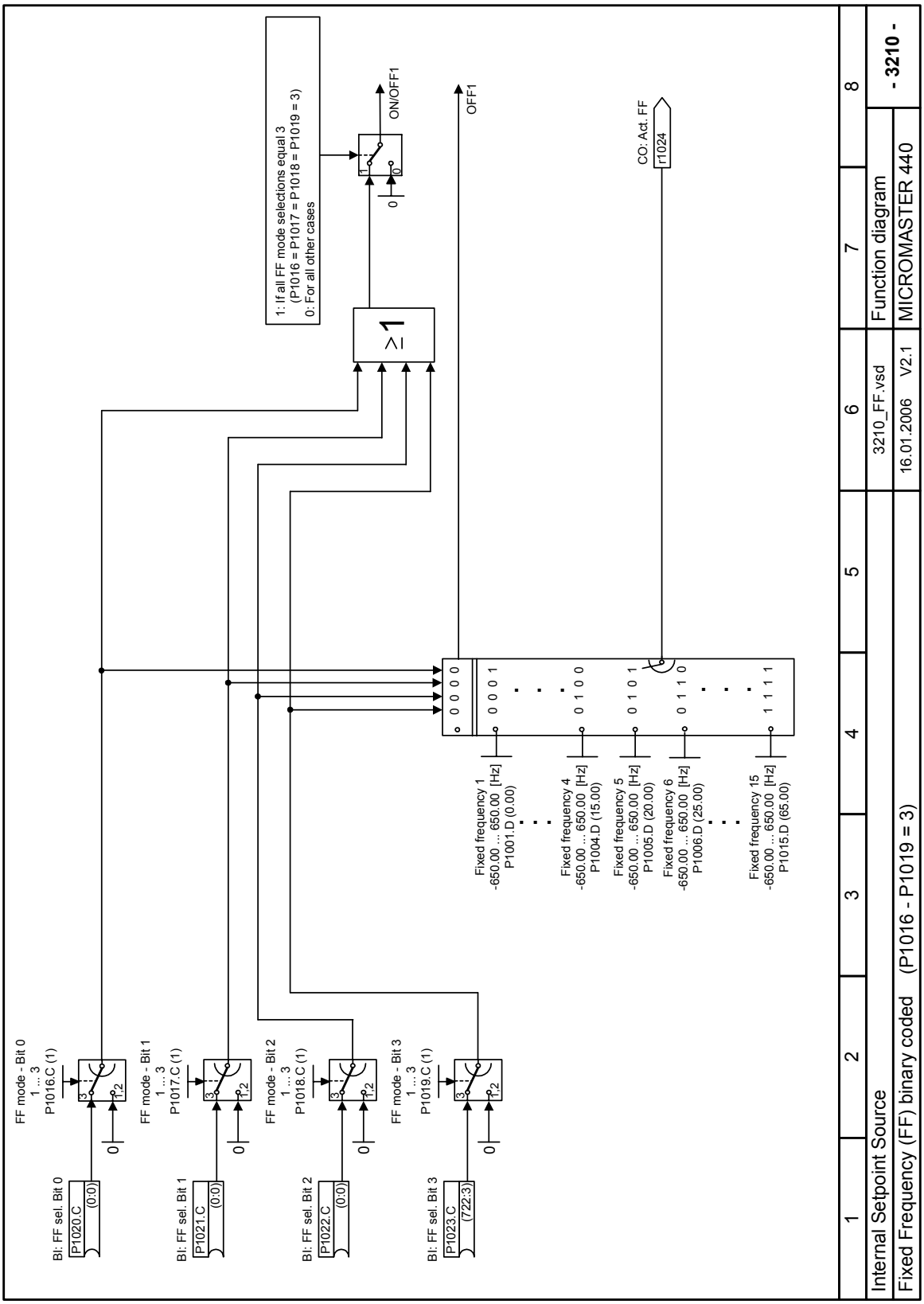
FF mode - Bit 0
1 ... 3
P1016.C (1)
FF mode - Bit 1
1 ... 3
P1017.C (1)
FF mode - Bit 2
1 ... 3
P1018.C (1)
FF mode - Bit 3
1 ... 3
P1019.C (1)
BI: FF sel. Bit 0
P1020.C
(0:0)
BI: FF sel. Bit 1
P1021.C
(0:0)
BI: FF sel. Bit 2
P1022.C
(0:0)
BI: FF sel. Bit 3
P1023.C
(722:3)
1: If all FF mode selections equal 3
(P1016 = P1017 = P1018 = P1019 = 3)
0: For all other cases
≥1
ON/OFF1
OFF1
CO: Act. FF
r1024
0 0 0 0
0 0 0 1
0 1 0 0
0 1 0 1
0 1 1 0
1 1 1 1
Fixed frequency 1
-650.00 ... 650.00 [Hz]
P1001.D (0.00)
Fixed frequency 4
-650.00 ... 650.00 [Hz]
P1004.D (15.00)
Fixed frequency 5
-650.00 ... 650.00 [Hz]
P1005.D (20.00)
Fixed frequency 6
-650.00 ... 650.00 [Hz]
P1006.D (25.00)
Fixed frequency 15
-650.00 ... 650.00 [Hz]
P1015.D (65.00)
1 2 3 4 5 6 7 8
Internal Setpoint Source
Fixed Frequency (FF) binary coded (P1016 - P1019 = 3)
3210_FF.vsd
16.01.2006 V2.1
Function diagram
MICROMASTER 440
- 3210 -

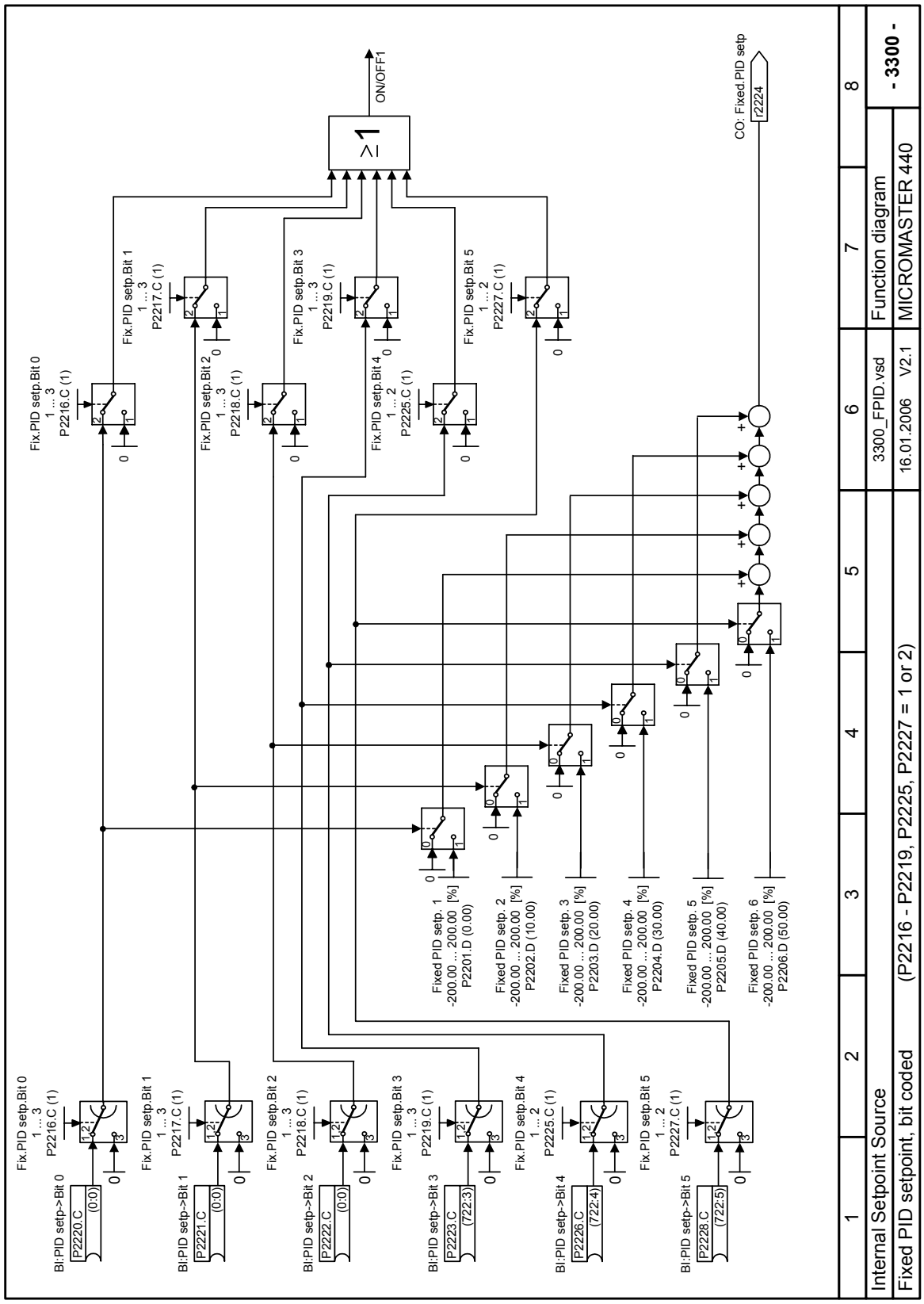
Fix.PID setp.Bit 0
1 ... 3
P2216.C (1)
Fix.PID setp.Bit 1
1 ... 3
P2217.C (1)
Fix.PID setp.Bit 2
1 ... 3
P2218.C (1)
Fix.PID setp.Bit 3
1 ... 3
P2219.C (1)
Fix.PID setp.Bit 4
1 ... 2
P2225.C (1)
Fix.PID setp.Bit 5
1 ... 2
P2227.C (1)
≥1
ON/OFF1
CO: Fixed.PID setp
r2224
Bi:PID setp->Bit 0
P2220.C
(0:0)
Bi:PID setp->Bit 1
P2221.C
(0:0)
Bi:PID setp->Bit 2
P2222.C
(0:0)
Bi:PID setp->Bit 3
P2223.C
(722:3)
Bi:PID setp->Bit 4
P2226.C
(722:4)
Bi:PID setp->Bit 5
P2228.C
(722:5)
Fixed PID setp. 1
-200.00 ... 200.00 [%]
P2201.D (0.00)
Fixed PID setp. 2
-200.00 ... 200.00 [%]
P2202.D (10.00)
Fixed PID setp. 3
-200.00 ... 200.00 [%]
P2203.D (20.00)
Fixed PID setp. 4
-200.00 ... 200.00 [%]
P2204.D (30.00)
Fixed PID setp. 5
-200.00 ... 200.00 [%]
P2205.D (40.00)
Fixed PID setp. 6
-200.00 ... 200.00 [%]
P2206.D (50.00)
1
2
3
4
5
6
7
8
Internal Setpoint Source
Fixed PID setpoint, bit coded
(P2216 - P2219, P2225, P2227 = 1 or 2)
3300_FPID.vsd
16.01.2006 V2.1
Function diagram
MICROMASTER 440
- 3300 -

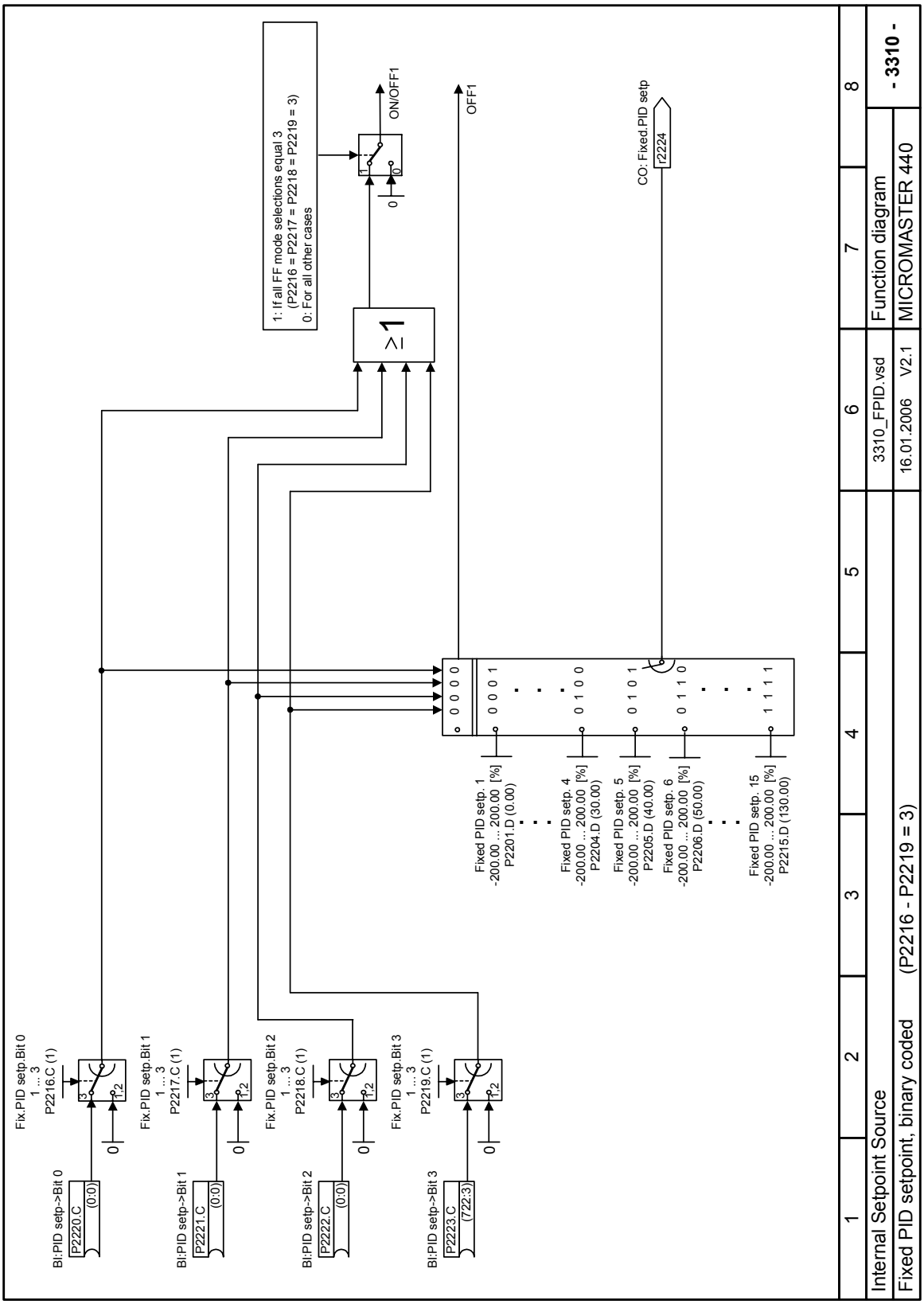
Fix.PID setp.Bit 0
1 ... 3
P2216.C (1)
Bi:PID setp->Bit 0
P2220.C
(0:0)
Fix.PID setp.Bit 1
1 ... 3
P2217.C (1)
Bi:PID setp->Bit 1
P2221.C
(0:0)
Fix.PID setp.Bit 2
1 ... 3
P2218.C (1)
Bi:PID setp->Bit 2
P2222.C
(0:0)
Fix.PID setp.Bit 3
1 ... 3
P2219.C (1)
Bi:PID setp->Bit 3
P2223.C
(722:3)
1: If all FF mode selections equal 3
(P2216 = P2217 = P2218 = P2219 = 3)
0: For all other cases
≥1
ON/OFF1
OFF1
CO: Fixed.PID setp
r2224
0 0 0 0
0 0 0 1
0 1 0 0
0 1 0 1
0 1 1 0
1 1 1 1
Fixed PID setp. 1
-200.00 ... 200.00 [%]
P2201.D (0.00)
Fixed PID setp. 4
-200.00 ... 200.00 [%]
P2204.D (30.00)
Fixed PID setp. 5
-200.00 ... 200.00 [%]
P2205.D (40.00)
Fixed PID setp. 6
-200.00 ... 200.00 [%]
P2206.D (50.00)
Fixed PID setp. 15
-200.00 ... 200.00 [%]
P2215.D (130.00)
1 2 3 4 5 6 7 8
Internal Setpoint Source
Fixed PID setpoint, binary coded (P2216 - P2219 = 3)
3310_FPID.vsd
16.01.2006 V2.1
Function diagram
MICROMASTER 440
- 3310 -

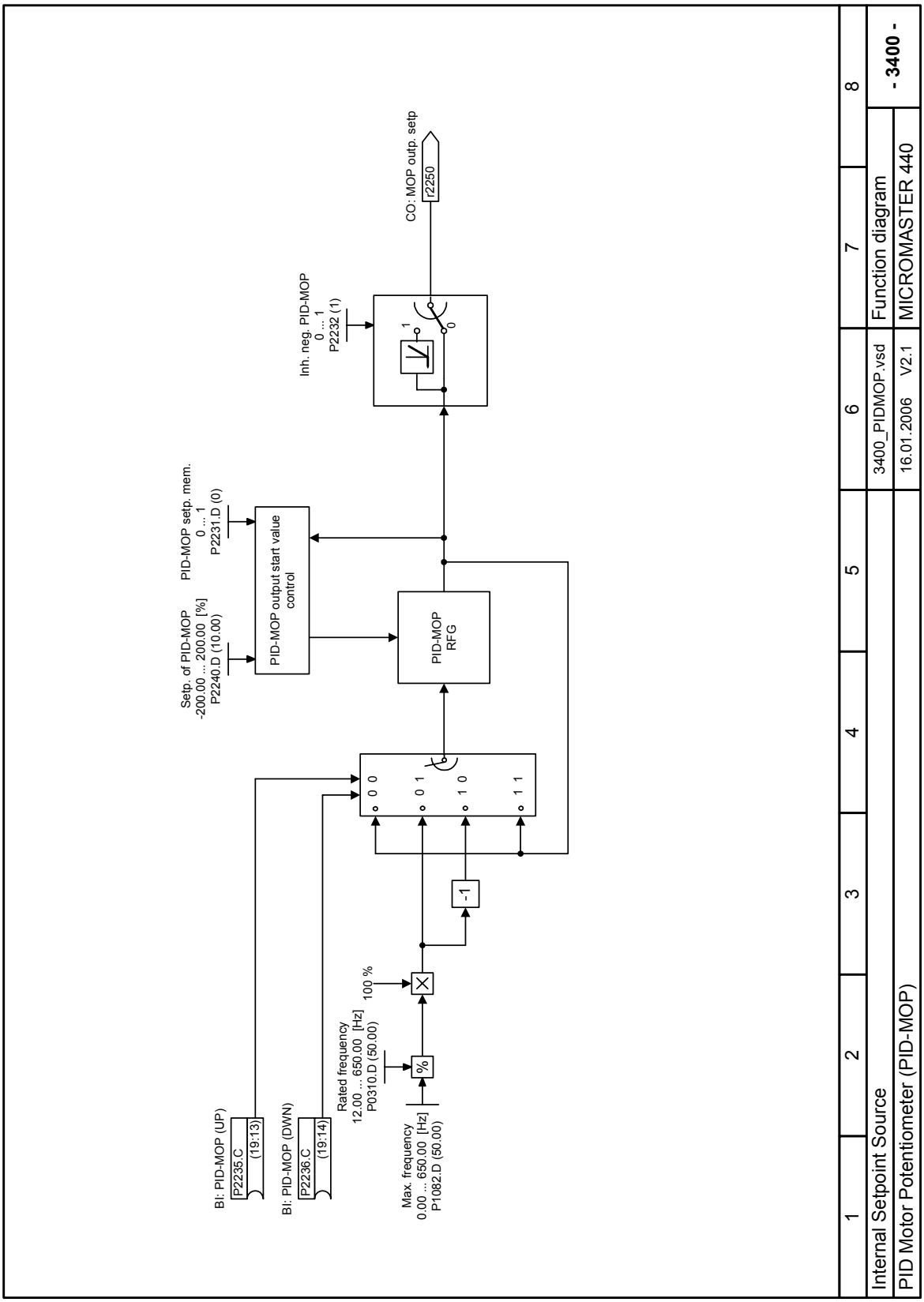
BI: PID-MOP (UP)
P2235.C
(19:13)
BI: PID-MOP (DWN)
P2236.C
(19:14)
Rated frequency
12.00 ... 650.00 [Hz]
P0310.D (50.00)
100 %
Max. frequency
0.00 ... 650.00 [Hz]
P1082.D (50.00)
%
-1
0 0
0 1
1 0
1 1
Setp. of PID-MOP
-200.00 ... 200.00 [%]
P2240.D (10.00)
PID-MOP setp. mem.
0 ... 1
P2231.D (0)
PID-MOP output start value control
PID-MOP RFG
Inh. neg. PID-MOP
0 ... 1
P2232 (1)
1
0
CO: MOP outp. setp
r2250
1
2
3
4
5
6
7
8
Internal Setpoint Source
PID Motor Potentiometer (PID-MOP)
3400_PIDMOP.vsd
16.01.2006 V2.1
Function diagram
MICROMASTER 440
- 3400 -

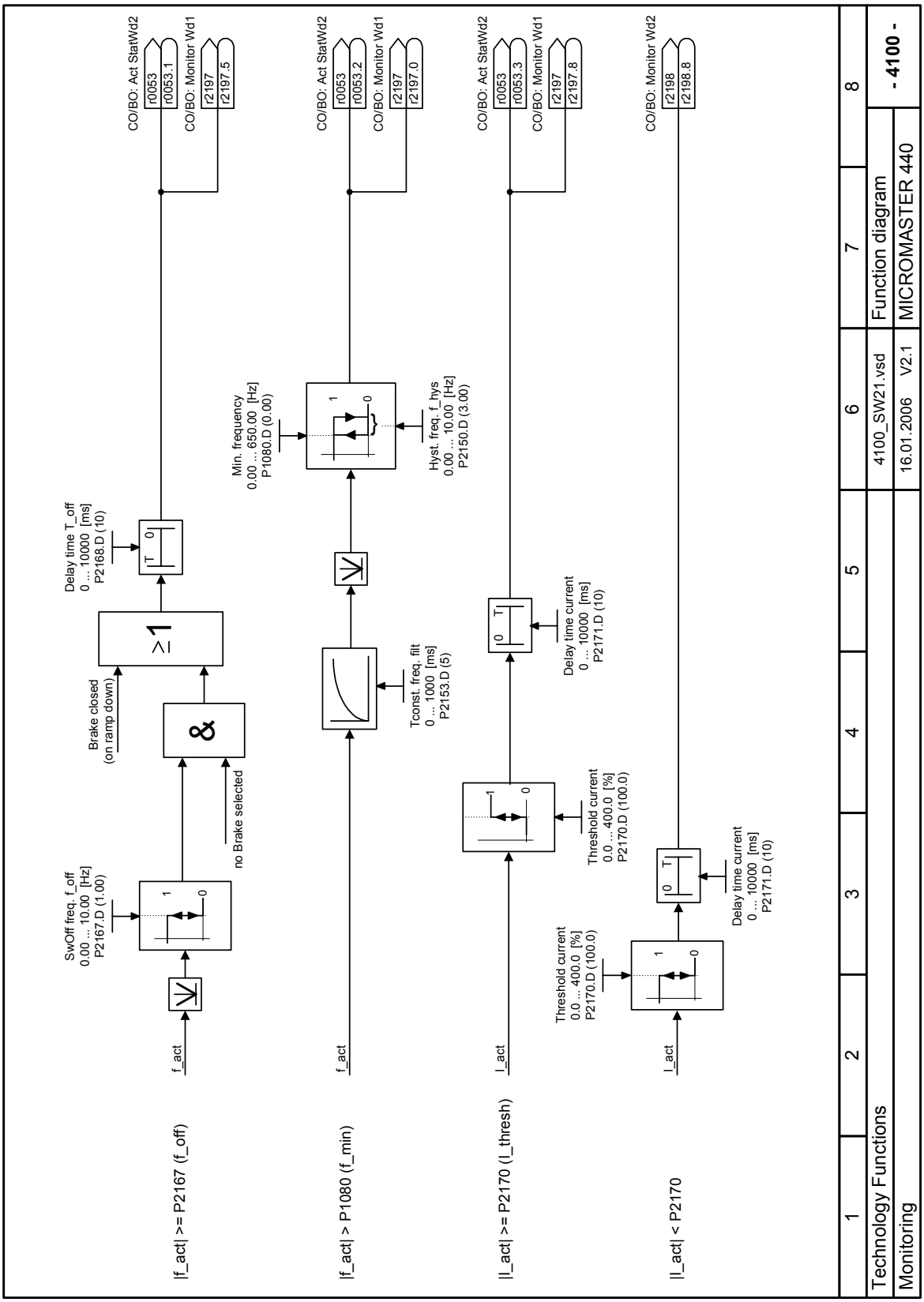
|f_act| >= P2167 (f_off)
|f_act| > P1080 (f_min)
|I_act| >= P2170 (I_thresh)
|I_act| < P2170
f_act
SwOff freq. f_off
0.00 ... 10.00 [Hz]
P2167.D (1.00)
no Brake selected
Brake closed
(on ramp down)
≥1
&
Delay time T_off
0 ... 10000 [ms]
P2168.D (10)
CO/BO: Act StatWd2
r0053
r0053.1
CO/BO: Monitor Wd1
r2197
r2197.5
Min. frequency
0.00 ... 650.00 [Hz]
P1080.D (0.00)
Tconst. freq. filt
0 ... 1000 [ms]
P2153.D (5)
Hyst. freq. f_hys
0.00 ... 10.00 [Hz]
P2150.D (3.00)
r0053.2
r2197.0
I_act
Threshold current
0.0 ... 400.0 [%]
P2170.D (100.0)
Delay time current
0 ... 10000 [ms]
P2171.D (10)
r0053.3
r2197.8
CO/BO: Monitor Wd2
r2198
r2198.8
1
2
3
4
5
6
7
8
Technology Functions
Monitoring
4100_SW21.vsd
16.01.2006 V2.1
Function diagram
MICROMASTER 440
- 4100 -

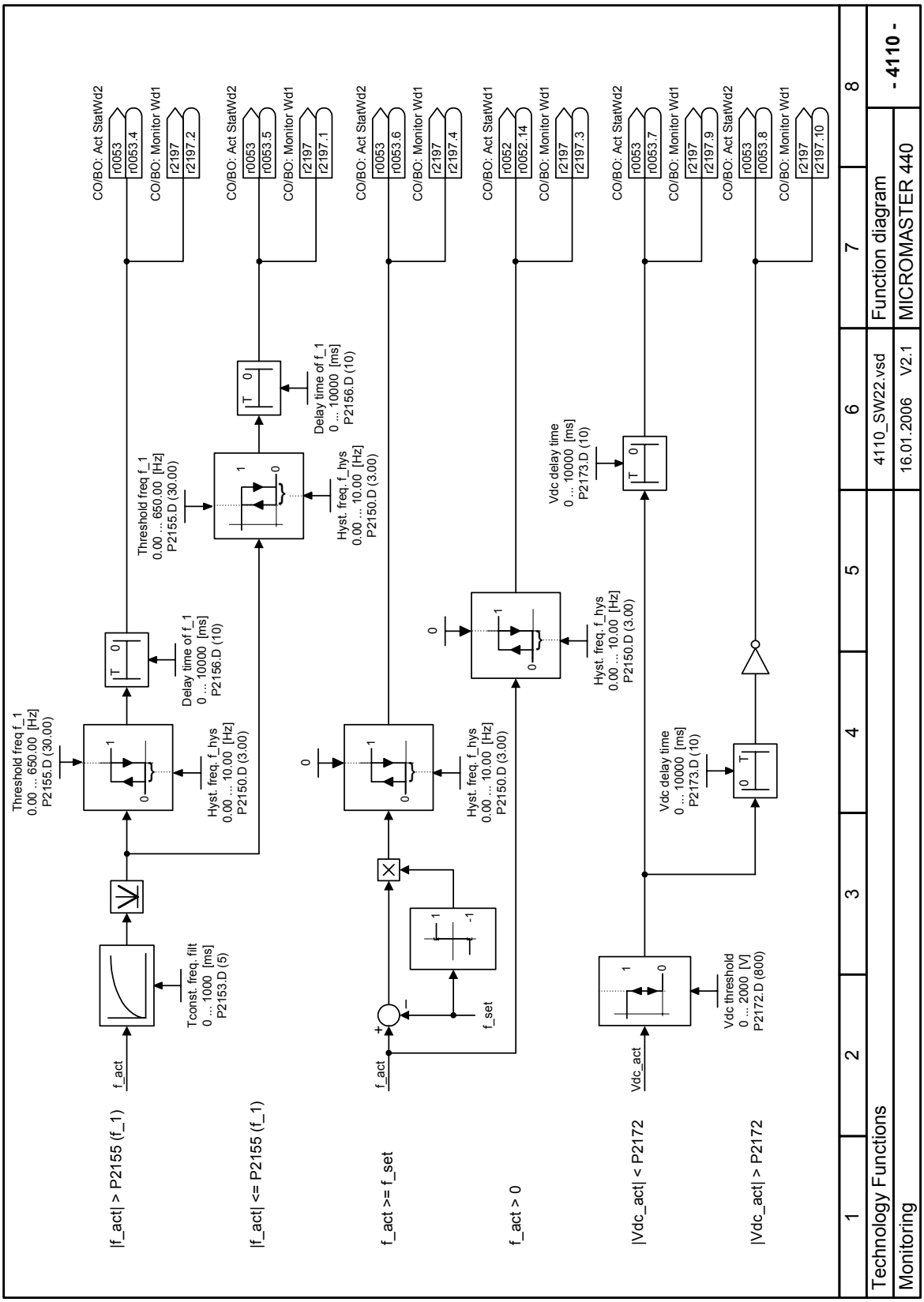
|f_act| > P2155 (f_1)
|f_act| <= P2155 (f_1)
f_act >= f_set
f_act > 0
|Vdc_act| < P2172
|Vdc_act| > P2172
f_act
Tconst. freq. filt
0 ... 1000 [ms]
P2153.D (5)
Threshold freq f_1
0.00 ... 650.00 [Hz]
P2155.D (30.00)
Hyst. freq. f_hys
0.00 ... 10.00 [Hz]
P2150.D (3.00)
Delay time of f_1
0 ... 10000 [ms]
P2156.D (10)
f_set
Vdc_act
Vdc threshold
0 ... 2000 [V]
P2172.D (800)
Vdc delay time
0 ... 10000 [ms]
P2173.D (10)
CO/BO: Act StatWd2
r0053
r0053.4
r0053.5
r0053.6
r0053.7
r0053.8
CO/BO: Monitor Wd1
r2197
r2197.2
r2197.1
r2197.4
r2197.9
r2197.10
CO/BO: Act StatWd1
r0052
r0052.14
r2197.3
1
2
3
4
5
6
7
8
Technology Functions
Monitoring
4110_SW22.vsd
16.01.2006 V2.1
Function diagram
MICROMASTER 440
- 4110 -

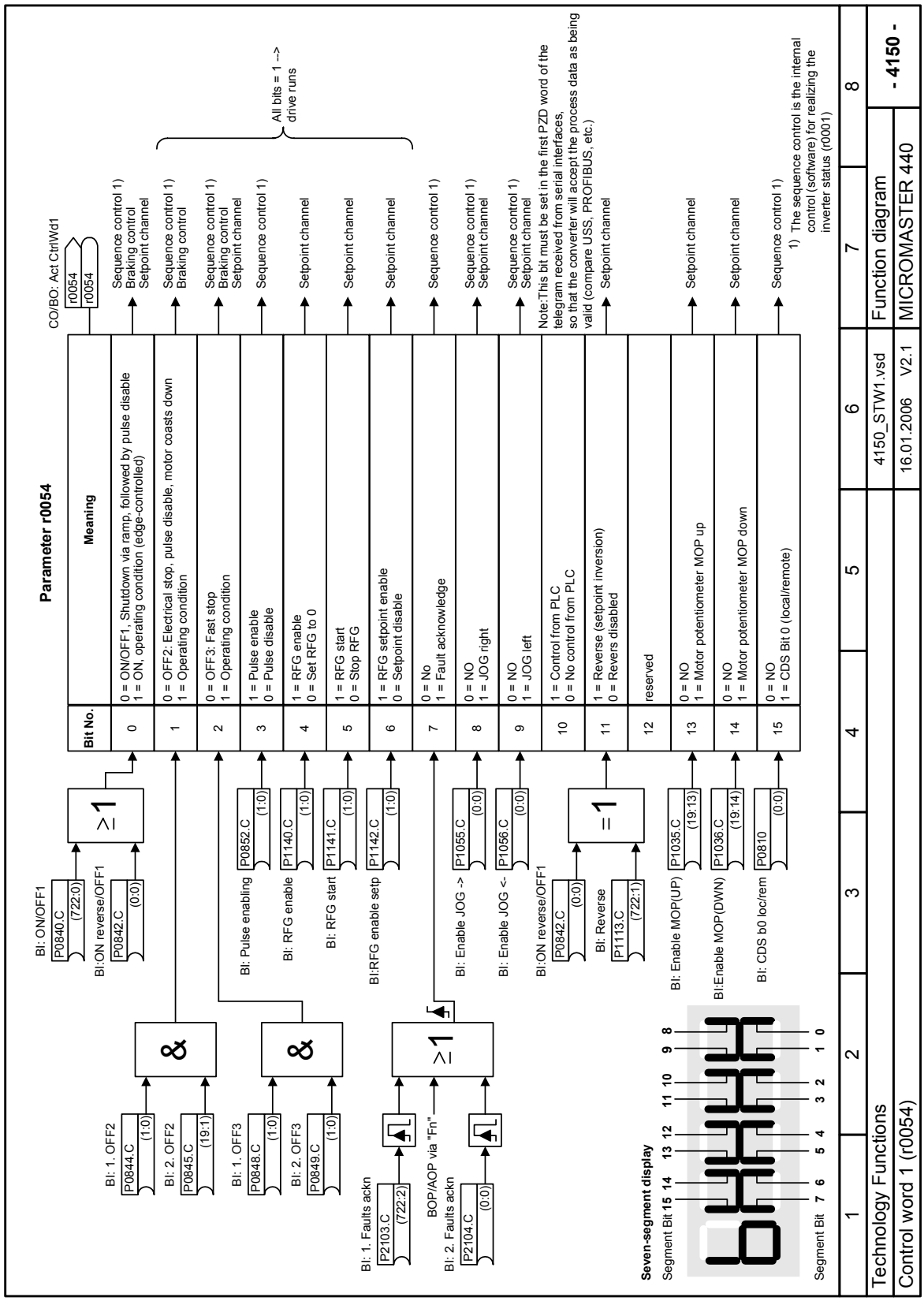
Parameter r0054
Bit No.
Meaning
0 = ON/OFF1, Shutdown via ramp, followed by pulse disable
1 = ON, operating condition (edge-controlled)
0 = OFF2: Electrical stop, pulse disable, motor coasts down
1 = Operating condition
0 = OFF3: Fast stop
1 = Operating condition
1 = Pulse enable
0 = Pulse disable
1 = RFG enable
0 = Set RFG to 0
1 = RFG start
0 = Stop RFG
1 = RFG setpoint enable
0 = Setpoint disable
0 = No
1 = Fault acknowledge
0 = NO
1 = JOG right
0 = NO
1 = JOG left
1 = Control from PLC
0 = No control from PLC
1 = Reverse (setpoint inversion)
0 = Revers disabled
reserved
0 = NO
1 = Motor potentiometer MOP up
0 = NO
1 = Motor potentiometer MOP down
0 = NO
1 = CDS Bit 0 (local/remote)
CO/BO: Act CtrlWd1
r0054
r0054
Sequence control 1)
Braking control
Setpoint channel
All bits = 1 --> drive runs
Note:This bit must be set in the first PZD word of the telegram received from serial interfaces, so that the converter will accept the process data as being valid (compare USS, PROFIBUS, etc.)
1) The sequence control is the internal control (software) for realizing the inverter status (r0001)
BI: ON/OFF1
P0840.C (722:0)
BI:ON reverse/OFF1
P0842.C (0:0)
BI: 1. OFF2
P0844.C (1:0)
BI: 2. OFF2
P0845.C (19:1)
BI: 1. OFF3
P0848.C (1:0)
BI: 2. OFF3
P0849.C (1:0)
BI: 1. Faults ackn
P2103.C (722:2)
BOP/AOP via "Fn"
BI: 2. Faults ackn
P2104.C (0:0)
BI: Pulse enabling
P0852.C (1:0)
BI: RFG enable
P1140.C (1:0)
BI: RFG start
P1141.C (1:0)
BI:RFG enable setp
P1142.C (1:0)
BI: Enable JOG ->
P1055.C (0:0)
BI: Enable JOG <-
P1056.C (0:0)
BI:ON reverse/OFF1
P0842.C (0:0)
BI: Reverse
P1113.C (722:1)
BI: Enable MOP(UP)
P1035.C (19:13)
BI:Enable MOP(DWN)
P1036.C (19:14)
BI: CDS b0 loc/rem
P0810 (0:0)
Seven-segment display
Segment Bit 15 14 13 12 11 10 9 8
Segment Bit 7 6 5 4 3 2 1 0
1 2 3 4 5 6 7 8
Technology Functions
4150_STW1.vsd
16.01.2006 V2.1
Function diagram
MICROMASTER 440
- 4150 -
Control word 1 (r0054)

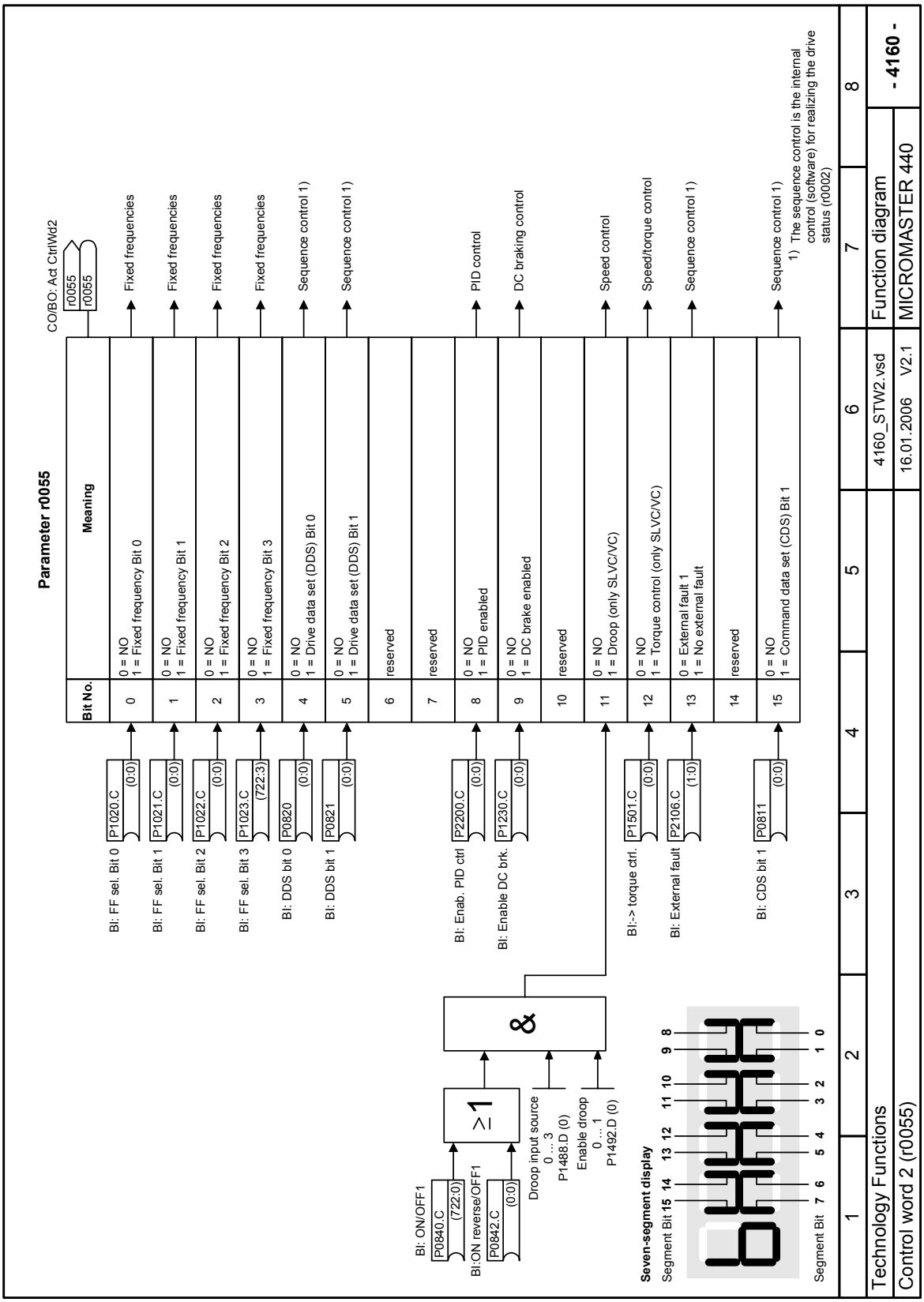
Parameter r0055
CO/BO: Act CtrlWd2
r0055
r0055
Bit No.
Meaning
0 = NO
1 = Fixed frequency Bit 0
0 = NO
1 = Fixed frequency Bit 1
0 = NO
1 = Fixed frequency Bit 2
0 = NO
1 = Fixed frequency Bit 3
0 = NO
1 = Drive data set (DDS) Bit 0
0 = NO
1 = Drive data set (DDS) Bit 1
reserved
reserved
0 = NO
1 = PID enabled
0 = NO
1 = DC brake enabled
reserved
0 = NO
1 = Droop (only SLVC/VC)
0 = NO
1 = Torque control (only SLVC/VC)
0 = External fault 1
1 = No external fault
reserved
0 = NO
1 = Command data set (CDS) Bit 1
Fixed frequencies
Fixed frequencies
Fixed frequencies
Fixed frequencies
Sequence control 1)
Sequence control 1)
PID control
DC braking control
Speed control
Speed/torque control
Sequence control 1)
Sequence control 1)
1) The sequence control is the internal control (software) for realizing the drive status (r0002)
BI: FF sel. Bit 0
P1020.C (0:0)
BI: FF sel. Bit 1
P1021.C (0:0)
BI: FF sel. Bit 2
P1022.C (0:0)
BI: FF sel. Bit 3
P1023.C (722:3)
BI: DDS bit 0
P0820 (0:0)
BI: DDS bit 1
P0821 (0:0)
BI: Enab. PID ctrl
P2200.C (0:0)
BI: Enable DC brk.
P1230.C (0:0)
BI:-> torque ctrl.
P1501.C (0:0)
BI: External fault
P2106.C (1:0)
BI: CDS bit 1
P0811 (0:0)
BI: ON/OFF1
P0840.C (722:0)
BI:ON reverse/OFF1
P0842.C (0:0)
≥1
&
Droop input source
0 ... 3
P1488.D (0)
Enable droop
0 ... 1
P1492.D (0)
Seven-segment display
Segment Bit 15 14 13 12 11 10 9 8
Segment Bit 7 6 5 4 3 2 1 0
1
2
3
4
5
6
7
8
Technology Functions
Control word 2 (r0055)
4160_STW2.vsd
16.01.2006 V2.1
Function diagram
MICROMASTER 440
- 4160 -

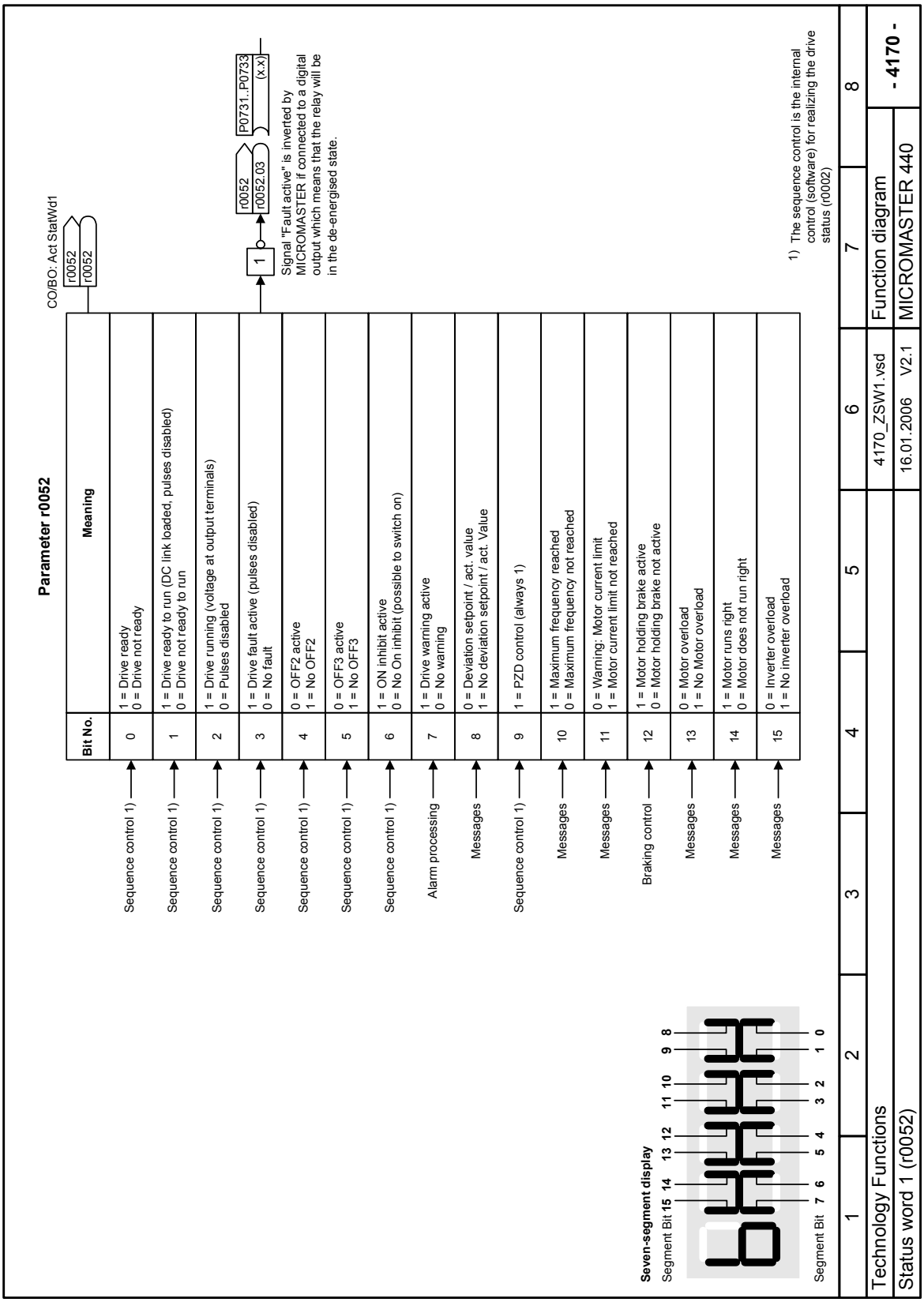
Parameter r0052
CO/BO: Act StatWd1
r0052
r0052
r0052
r0052.03
P0731..P0733
(x.x)
1
Signal "Fault active" is inverted by MICROMASTER if connected to a digital output which means that the relay will be in the de-energised state.
1) The sequence control is the internal control (software) for realizing the drive status (r0002)
Bit No.
Meaning
0 Sequence control 1) 1 = Drive ready 0 = Drive not ready
1 Sequence control 1) 1 = Drive ready to run (DC link loaded, pulses disabled) 0 = Drive not ready to run
2 Sequence control 1) 1 = Drive running (voltage at output terminals) 0 = Pulses disabled
3 Sequence control 1) 1 = Drive fault active (pulses disabled) 0 = No fault
4 Sequence control 1) 0 = OFF2 active 1 = No OFF2
5 Sequence control 1) 0 = OFF3 active 1 = No OFF3
6 Sequence control 1) 1 = ON inhibit active 0 = No On inhibit (possible to switch on)
7 Alarm processing 1 = Drive warning active 0 = No warning
8 Messages 0 = Deviation setpoint / act. value 1 = No deviation setpoint / act. Value
9 Sequence control 1) 1 = PZD control (always 1)
10 Messages 1 = Maximum frequency reached 0 = Maximum frequency not reached
11 Messages 0 = Warning: Motor current limit 1 = Motor current limit not reached
12 Braking control 1 = Motor holding brake active 0 = Motor holding brake not active
13 Messages 0 = Motor overload 1 = No Motor overload
14 Messages 1 = Motor runs right 0 = Motor does not run right
15 Messages 0 = Inverter overload 1 = No inverter overload
Seven-segment display
Segment Bit 15 14 13 12 11 10 9 8
Segment Bit 7 6 5 4 3 2 1 0
1 2 3 4 5 6 7 8
Technology Functions
4170_ZSW1.vsd
Function diagram
- 4170 -
Status word 1 (r0052)
16.01.2006 V2.1
MICROMASTER 440

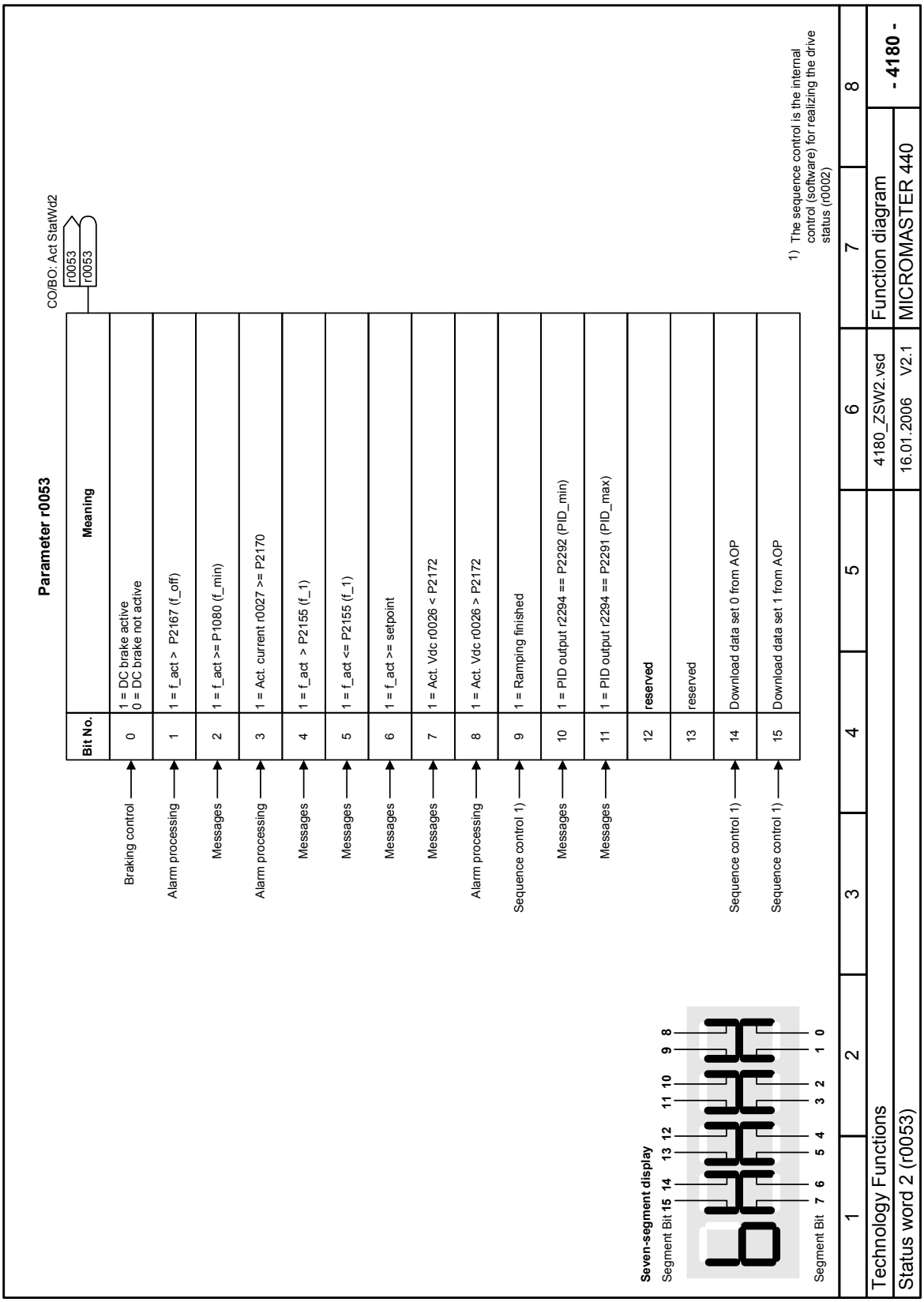
Parameter r0053
CO/BO: Act StatWd2
r0053
r0053
Bit No.
Meaning
0 1 = DC brake active 0 = DC brake not active
1 1 = f_act > P2167 (f_off)
2 1 = f_act >= P1080 (f_min)
3 1 = Act. current r0027 >= P2170
4 1 = f_act > P2155 (f_1)
5 1 = f_act <= P2155 (f_1)
6 1 = f_act >= setpoint
7 1 = Act. Vdc r0026 < P2172
8 1 = Act. Vdc r0026 > P2172
9 1 = Ramping finished
10 1 = PID output r2294 == P2292 (PID_min)
11 1 = PID output r2294 == P2291 (PID_max)
12 reserved
13 reserved
14 Download data set 0 from AOP
15 Download data set 1 from AOP
Braking control
Alarm processing
Messages
Alarm processing
Messages
Messages
Messages
Messages
Alarm processing
Sequence control 1)
Messages
Messages
Sequence control 1)
Sequence control 1)
1) The sequence control is the internal control (software) for realizing the drive status (r0002)
Seven-segment display
Segment Bit 15 14 13 12 11 10 9 8
Segment Bit 7 6 5 4 3 2 1 0
1 2 3 4 5 6 7 8
Technology Functions
4180_ZSW2.vsd
Function diagram
- 4180 -
Status word 2 (r0053)
16.01.2006 V2.1
MICROMASTER 440

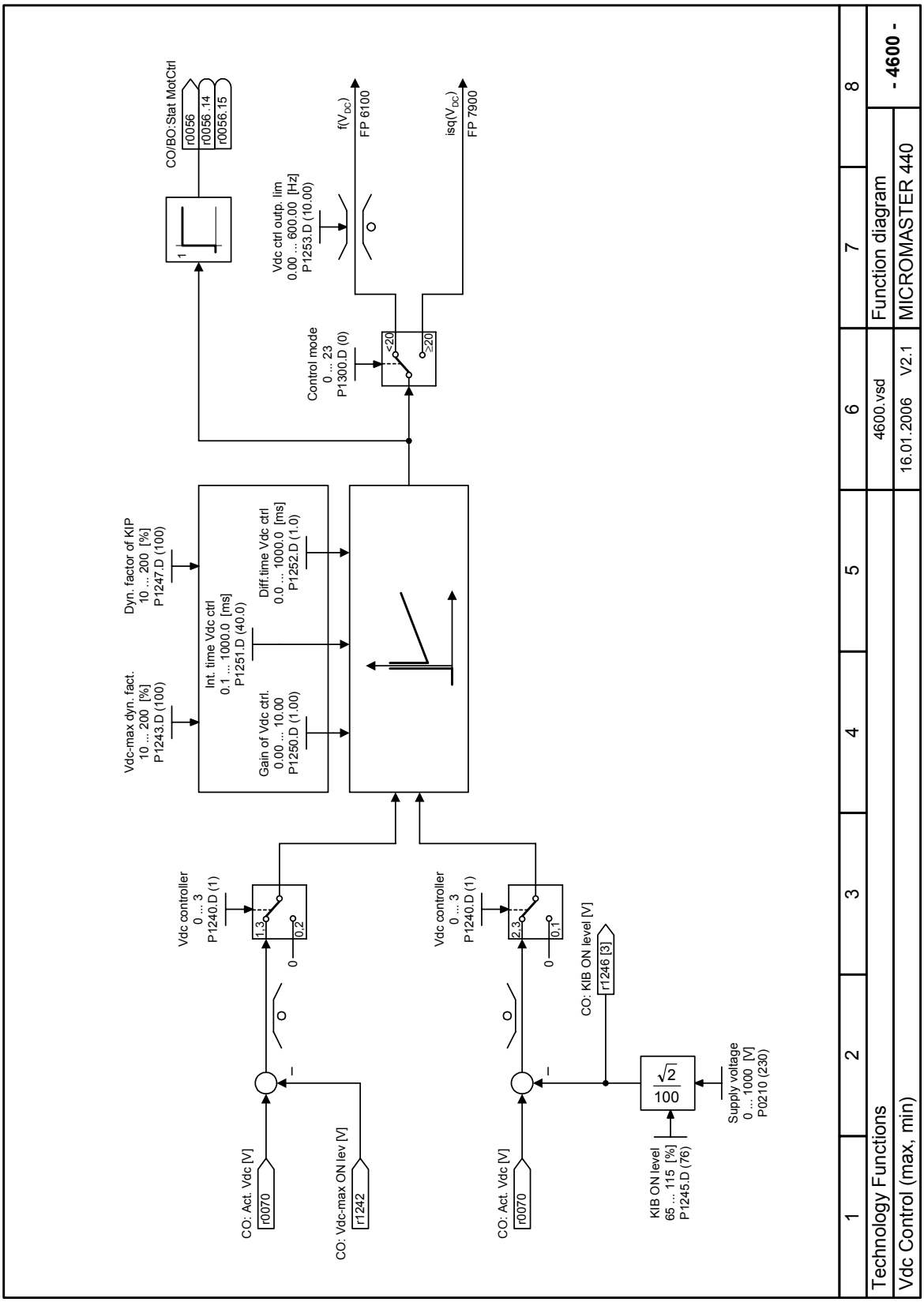
CO/BO:Stat MotCtrl
r0056
r0056.14
r0056.15
f(V_DC)
FP 6100
isq(V_DC)
FP 7900
Vdc ctrl outp. lim
0.00 ... 600.00 [Hz]
P1253.D (10.00)
Control mode
0 ... 23
P1300.D (0)
<20
≥20
Dyn. factor of KIP
10 ... 200 [%]
P1247.D (100)
Diff.time Vdc ctrl
0.0 ... 1000.0 [ms]
P1252.D (1.0)
Int. time Vdc ctrl
0.1 ... 1000.0 [ms]
P1251.D (40.0)
Vdc-max dyn. fact.
10 ... 200 [%]
P1243.D (100)
Gain of Vdc ctrl.
0.00 ... 10.00
P1250.D (1.00)
Vdc controller
0 ... 3
P1240.D (1)
1,3
0,2
Vdc controller
0 ... 3
P1240.D (1)
2,3
0,1
CO: KIB ON level [V]
r1246 [3]
CO: Act. Vdc [V]
r0070
CO: Vdc-max ON lev [V]
r1242
CO: Act. Vdc [V]
r0070
KIB ON level
65 ... 115 [%]
P1245.D (76)
√2
100
Supply voltage
0 ... 1000 [V]
P0210 (230)
1
2
3
4
5
6
7
8
Technology Functions
Vdc Control (max, min)
4600.vsd
16.01.2006 V2.1
Function diagram
MICROMASTER 440
- 4600 -

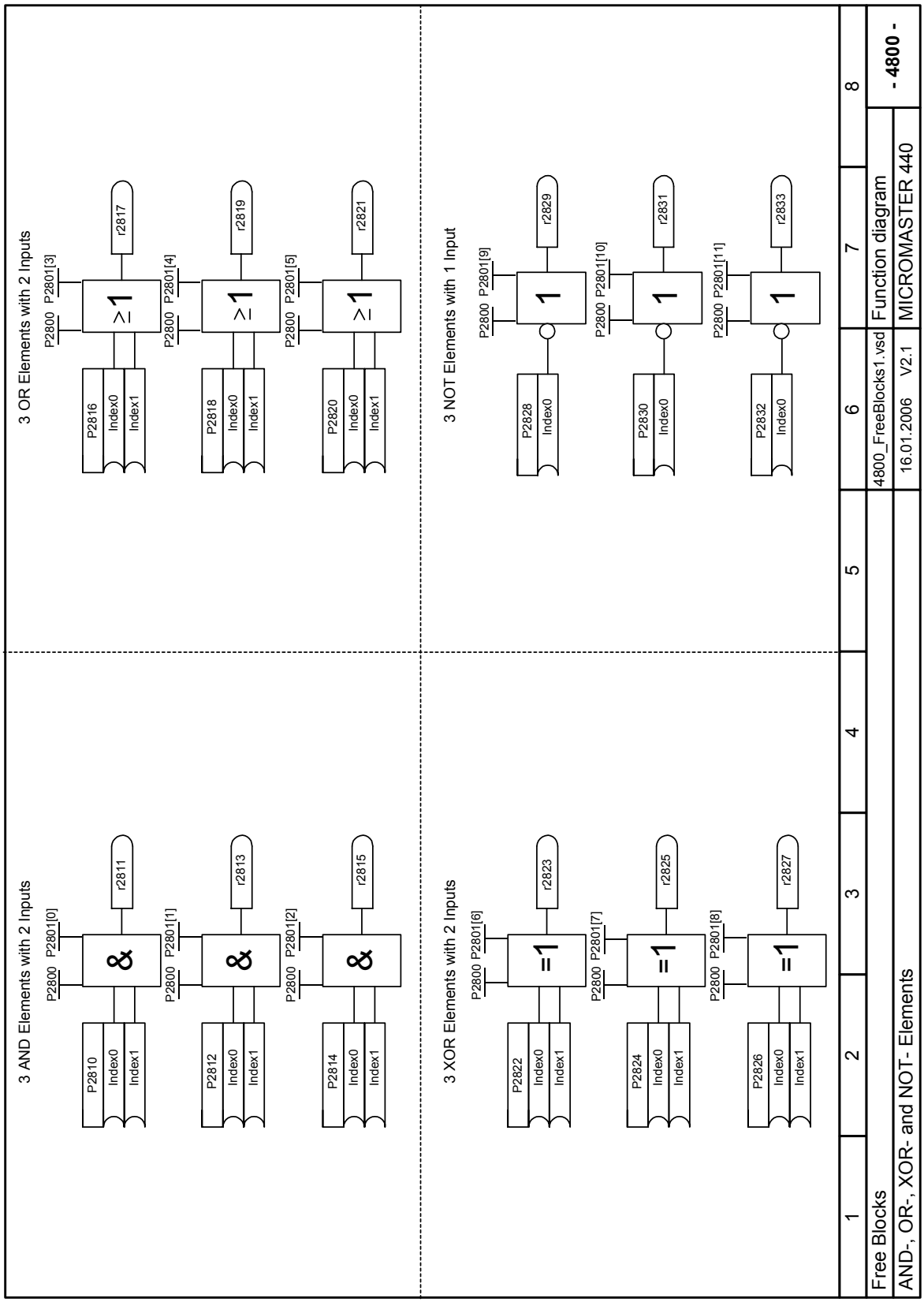
3 OR Elements with 2 Inputs
P2800 P2801[3]
P2816 Index0 Index1
≥1
r2817
P2800 P2801[4]
P2818 Index0 Index1
≥1
r2819
P2800 P2801[5]
P2820 Index0 Index1
≥1
r2821
3 NOT Elements with 1 Input
P2800 P2801[9]
P2828 Index0
1
r2829
P2800 P2801[10]
P2830 Index0
1
r2831
P2800 P2801[11]
P2832 Index0
1
r2833
3 AND Elements with 2 Inputs
P2800 P2801[0]
P2810 Index0 Index1
&
r2811
P2800 P2801[1]
P2812 Index0 Index1
&
r2813
P2800 P2801[2]
P2814 Index0 Index1
&
r2815
3 XOR Elements with 2 Inputs
P2800 P2801[6]
P2822 Index0 Index1
=1
r2823
P2800 P2801[7]
P2824 Index0 Index1
=1
r2825
P2800 P2801[8]
P2826 Index0 Index1
=1
r2827
1 2 3 4 5 6 7 8
Free Blocks
4800_FreeBlocks1.vsd
Function diagram
- 4800 -
AND-, OR-, XOR- and NOT- Elements
16.01.2006 V2.1
MICROMASTER 440

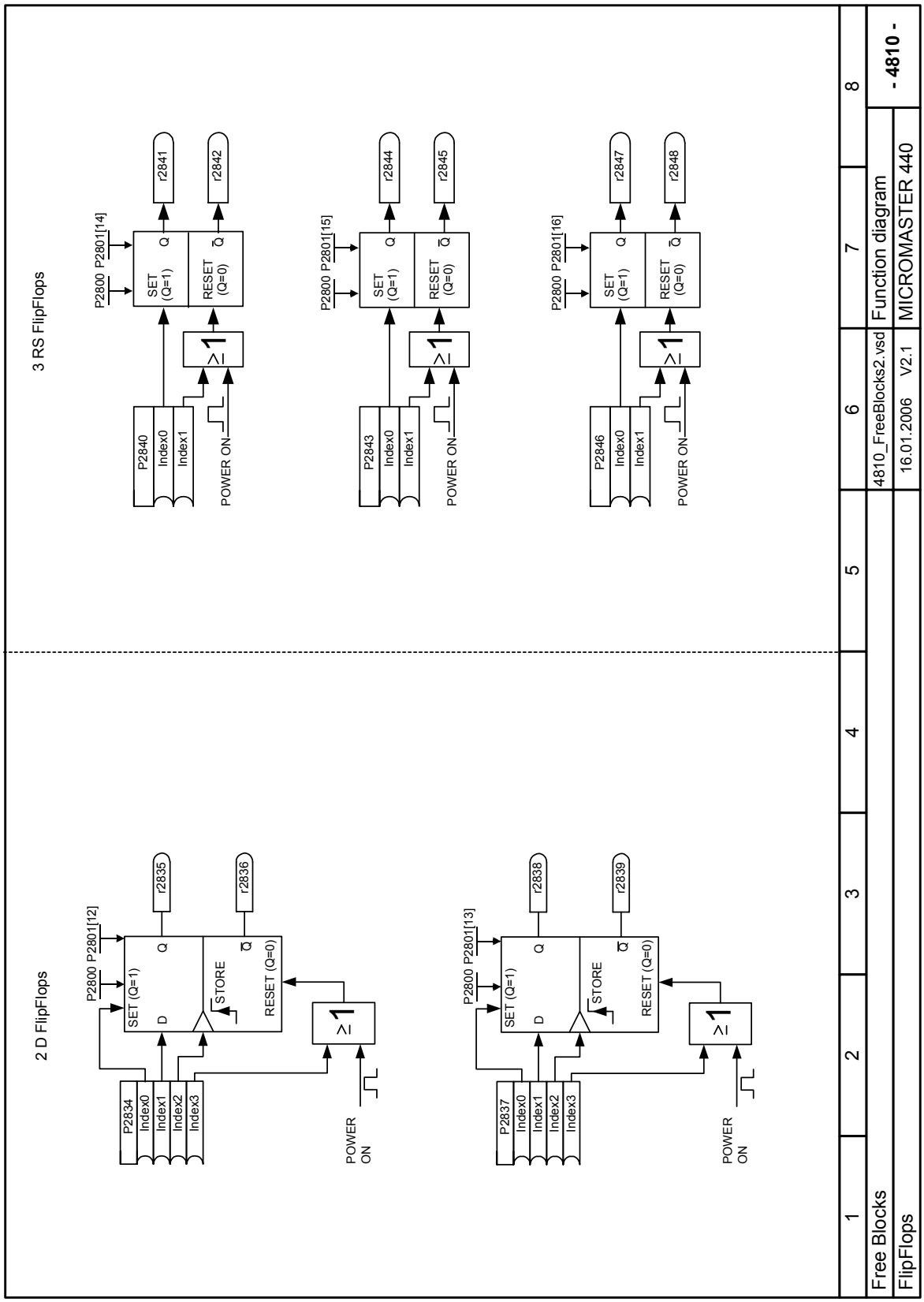
3 RS FlipFlops
P2800 P2801[14]
SET (Q=1)
Q
RESET (Q=0)
Q̄
r2841
r2842
P2840
Index0
Index1
POWER ON
≥1
P2800 P2801[15]
r2844
r2845
P2843
P2800 P2801[16]
r2847
r2848
P2846
2 D FlipFlops
P2800 P2801[12]
D
STORE
r2835
r2836
P2834
Index2
Index3
POWER ON
P2800 P2801[13]
r2838
r2839
P2837
1
2
3
4
5
6
7
8
Free Blocks
4810_FreeBlocks2.vsd
Function diagram
- 4810 -
FlipFlops
16.01.2006
V2.1
MICROMASTER 440

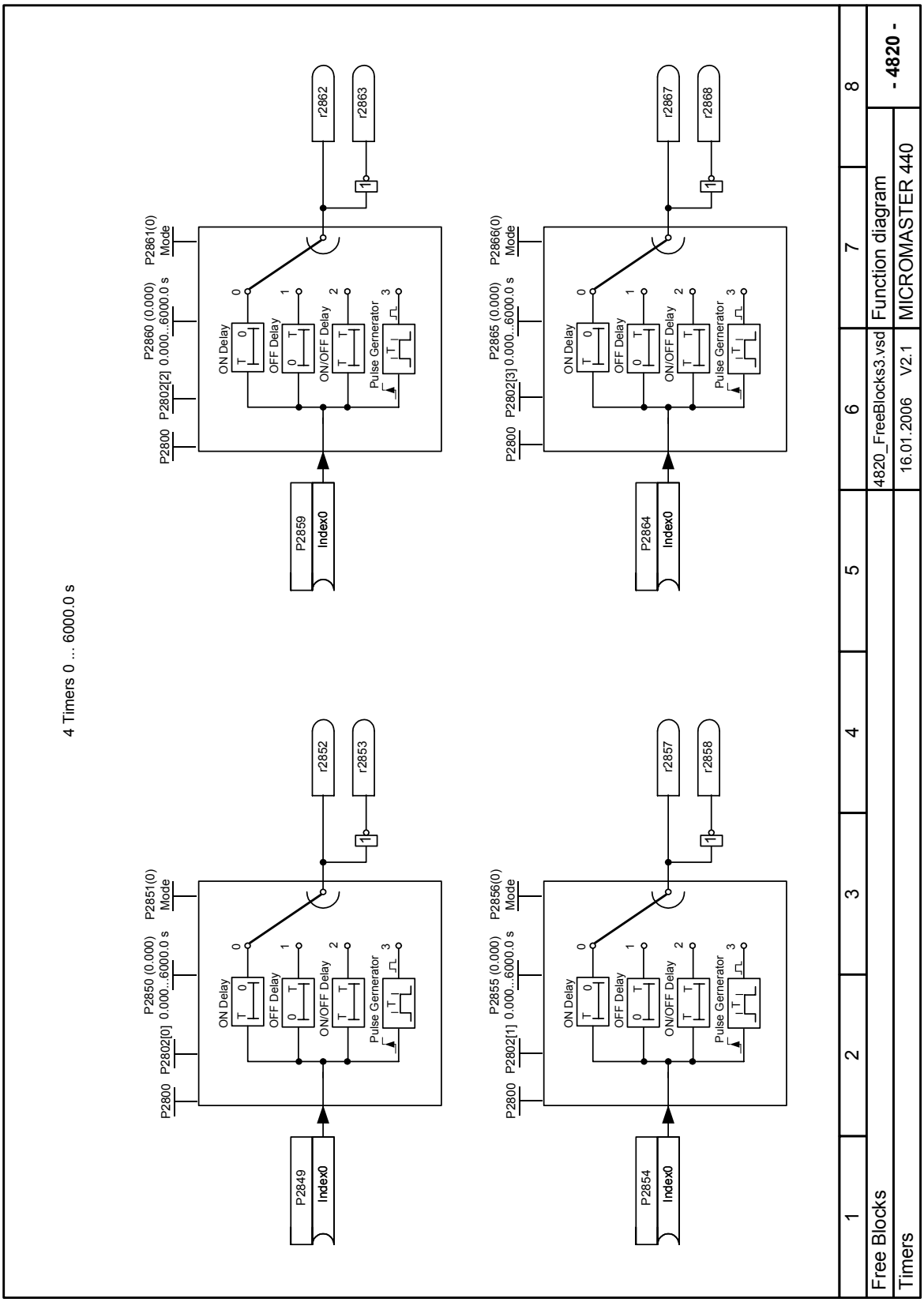
4 Timers 0 ... 6000.0 s
P2800
P2802[0]
P2850 (0.000) 0.000...6000.0 s
P2851(0) Mode
P2849 Index0
ON Delay
OFF Delay
ON/OFF Delay
Pulse Gernerator
r2852
r2853
P2800
P2802[1]
P2855 (0.000) 0.000...6000.0 s
P2856(0) Mode
P2854 Index0
r2857
r2858
P2800
P2802[2]
P2860 (0.000) 0.000...6000.0 s
P2861(0) Mode
P2859 Index0
r2862
r2863
P2800
P2802[3]
P2865 (0.000) 0.000...6000.0 s
P2866(0) Mode
P2864 Index0
r2867
r2868
1 2 3 4 5 6 7 8
Free Blocks
Timers
4820_FreeBlocks3.vsd
16.01.2006 V2.1
Function diagram
MICROMASTER 440
- 4820 -

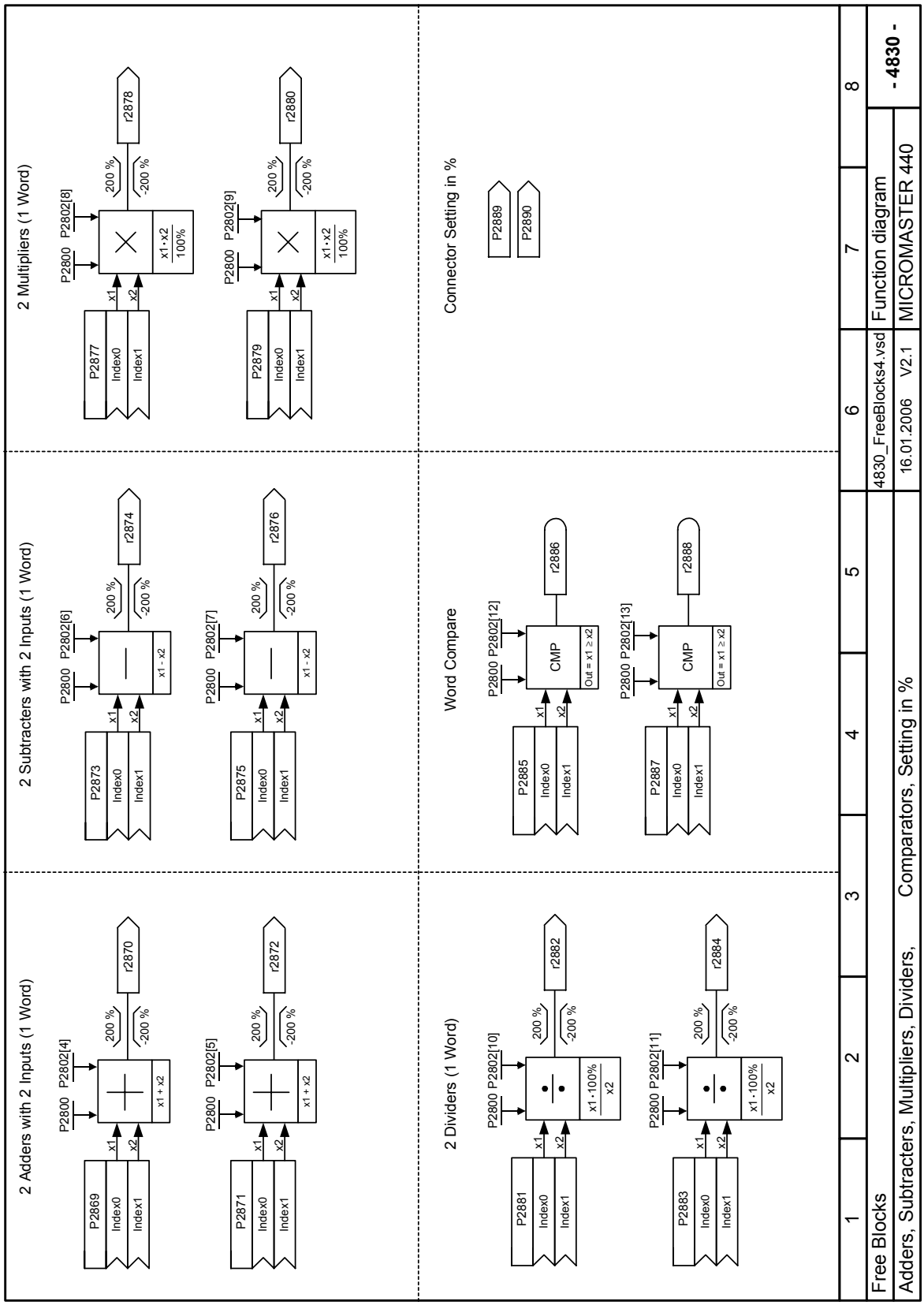
2 Adders with 2 Inputs (1 Word)
P2869
Index0
Index1
P2800
P2802[4]
x1
x2
x1 + x2
200 %
-200 %
r2870
P2871
Index0
Index1
P2800
P2802[5]
x1
x2
x1 + x2
200 %
-200 %
r2872
2 Subtracters with 2 Inputs (1 Word)
P2873
Index0
Index1
P2800
P2802[6]
x1
x2
x1 - x2
200 %
-200 %
r2874
P2875
Index0
Index1
P2800
P2802[7]
x1
x2
x1 - x2
200 %
-200 %
r2876
2 Multipliers (1 Word)
P2877
Index0
Index1
P2800
P2802[8]
x1
x2
x1 · x2 / 100%
200 %
-200 %
r2878
P2879
Index0
Index1
P2800
P2802[9]
x1
x2
x1 · x2 / 100%
200 %
-200 %
r2880
2 Dividers (1 Word)
P2881
Index0
Index1
P2800
P2802[10]
x1
x2
x1 · 100% / x2
200 %
-200 %
r2882
P2883
Index0
Index1
P2800
P2802[11]
x1
x2
x1 · 100% / x2
200 %
-200 %
r2884
Word Compare
P2885
Index0
Index1
P2800
P2802[12]
x1
x2
CMP
Out = x1 ≥ x2
r2886
P2887
Index0
Index1
P2800
P2802[13]
x1
x2
CMP
Out = x1 ≥ x2
r2888
Connector Setting in %
P2889
P2890
1
2
3
4
5
6
7
8
Free Blocks
4830_FreeBlocks4.vsd
Function diagram
- 4830 -
Adders, Subtracters, Multipliers, Dividers, Comparators, Setting in %
16.01.2006 V2.1
MICROMASTER 440

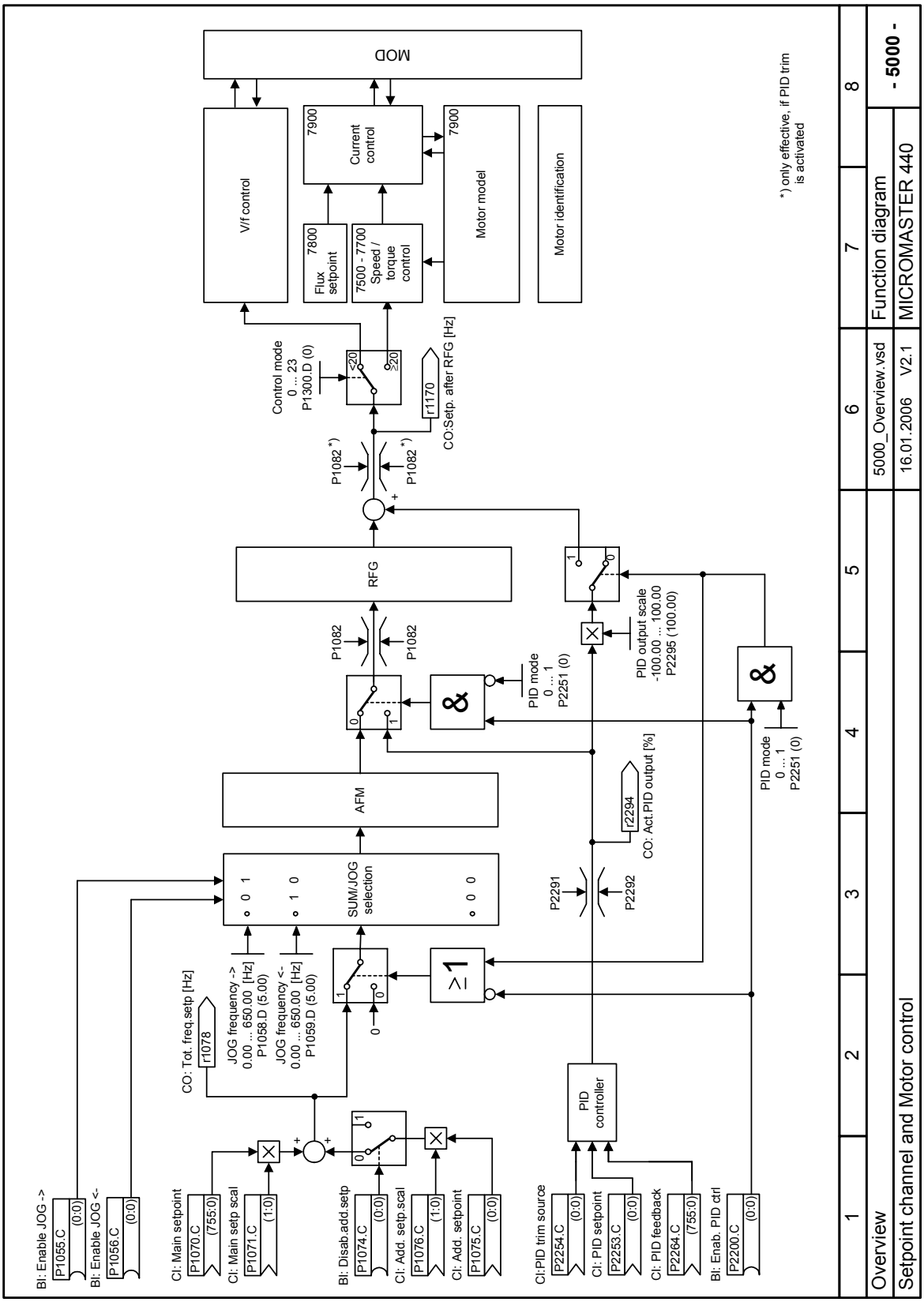
MOD
V/f control
7900
Current control
7900
Motor model
Motor identification
7800
Flux setpoint
7500 - 7700
Speed / torque control
Control mode
0 ... 23
P1300.D (0)
r1170
CO:Setp. after RFG [Hz]
P1082 *)
P1082 *)
RFG
P1082
P1082
PID mode
0 ... 1
P2251 (0)
PID output scale
-100.00 ... 100.00
P2295 (100.00)
AFM
r2294
CO: Act.PID output [%]
PID mode
0 ... 1
P2251 (0)
SUM/JOG selection
P2291
P2292
CO: Tot. freq.setp [Hz]
r1078
JOG frequency ->
0.00 ... 650.00 [Hz]
P1058.D (5.00)
JOG frequency <-
0.00 ... 650.00 [Hz]
P1059.D (5.00)
PID controller
BI: Enable JOG ->
P1055.C (0:0)
BI: Enable JOG <-
P1056.C (0:0)
CI: Main setpoint
P1070.C (755:0)
CI: Main setp.scal
P1071.C (1:0)
BI: Disab.add.setp
P1074.C (0:0)
CI: Add. setp.scal
P1076.C (1:0)
CI: Add. setpoint
P1075.C (0:0)
CI:PID trim source
P2254.C (0:0)
CI: PID setpoint
P2253.C (0:0)
CI: PID feedback
P2264.C (755:0)
BI: Enab. PID ctrl
P2200.C (0:0)
*) only effective, if PID trim is activated
1
2
3
4
5
6
7
8
Overview
5000_Overview.vsd
16.01.2006 V2.1
Function diagram
MICROMASTER 440
- 5000 -
Setpoint channel and Motor control

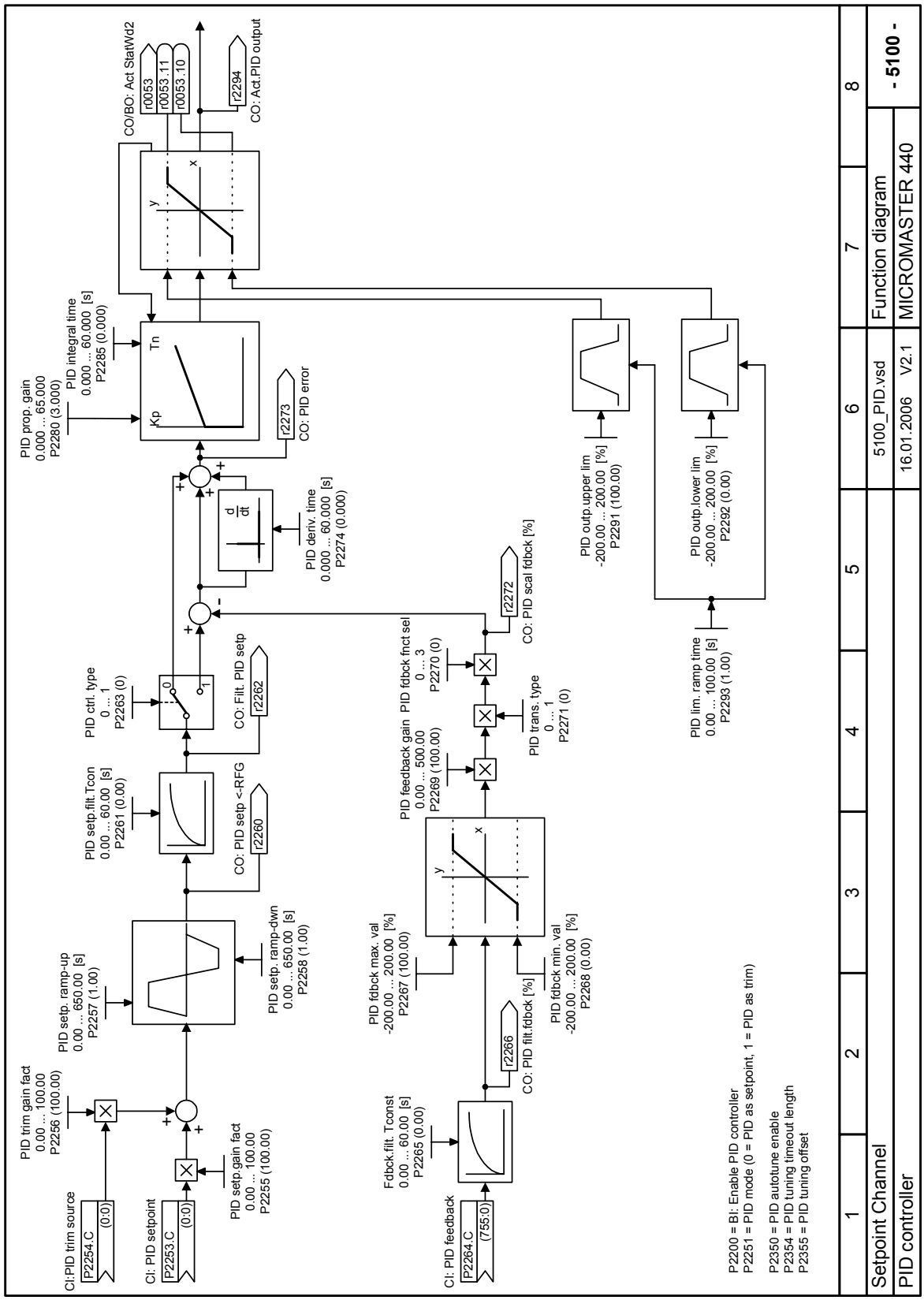
CI:PID trim source
P2254.C
(0:0)
CI: PID setpoint
P2253.C
(0:0)
PID trim gain fact
0.00 ... 100.00
P2256 (100.00)
PID setp.gain fact
0.00 ... 100.00
P2255 (100.00)
PID setp. ramp-up
0.00 ... 650.00 [s]
P2257 (1.00)
PID setp. ramp-dwn
0.00 ... 650.00 [s]
P2258 (1.00)
PID setp.filt.Tcon
0.00 ... 60.00 [s]
P2261 (0.00)
CO: PID setp <-RFG
r2260
PID ctrl. type
0 ... 1
P2263 (0)
CO: Filt. PID setp
r2262
PID deriv. time
0.000 ... 60.000 [s]
P2274 (0.000)
PID prop. gain
0.000 ... 65.000
P2280 (3.000)
PID integral time
0.000 ... 60.000 [s]
P2285 (0.000)
CO: PID error
r2273
CO/BO: Act StatWd2
r0053
r0053.11
r0053.10
CO: Act.PID output
r2294
CI: PID feedback
P2264.C
(755:0)
Fdbck.filt. Tconst
0.00 ... 60.00 [s]
P2265 (0.00)
CO: PID filt.fdbck [%]
r2266
PID fdbck max. val
-200.00 ... 200.00 [%]
P2267 (100.00)
PID fdbck min. val
-200.00 ... 200.00 [%]
P2268 (0.00)
PID feedback gain
0.00 ... 500.00
P2269 (100.00)
PID fdbck fnct sel
0 ... 3
P2270 (0)
PID trans. type
0 ... 1
P2271 (0)
CO: PID scal fdbck [%]
r2272
PID outp.upper lim
-200.00 ... 200.00 [%]
P2291 (100.00)
PID outp.lower lim
-200.00 ... 200.00 [%]
P2292 (0.00)
PID lim. ramp time
0.00 ... 100.00 [s]
P2293 (1.00)
P2200 = BI: Enable PID controller
P2251 = PID mode (0 = PID as setpoint, 1 = PID as trim)
P2350 = PID autotune enable
P2354 = PID tuning timeout length
P2355 = PID tuning offset
1
2
3
4
5
6
7
8
Setpoint Channel
PID controller
5100_PID.vsd
16.01.2006 V2.1
Function diagram
MICROMASTER 440
- 5100 -

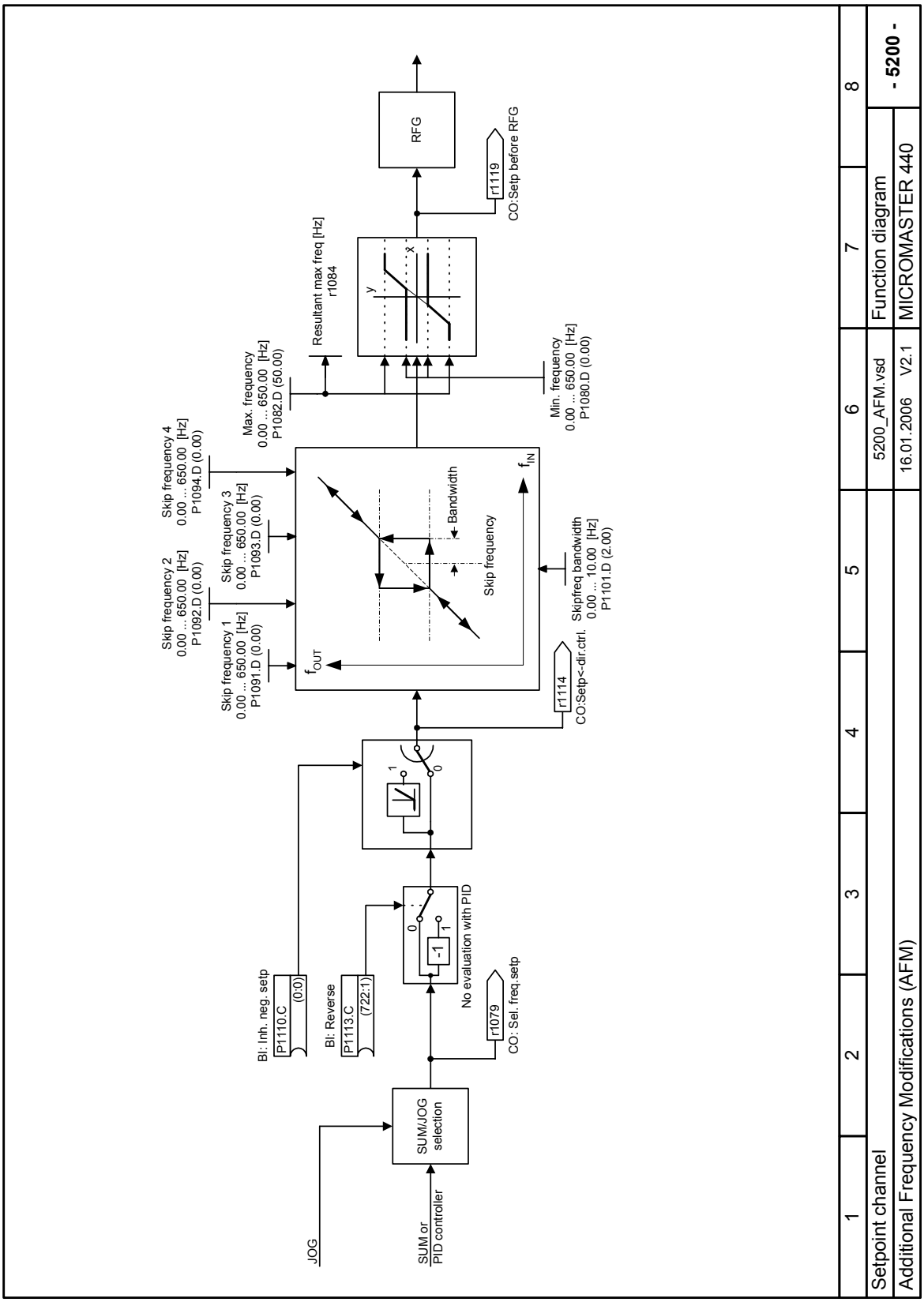
JOG
SUM or PID controller
SUM/JOG selection
Bl: Inh. neg. setp
P1110.C
(0:0)
Bl: Reverse
P1113.C
(722:1)
No evaluation with PID
-1
r1079
CO: Sel. freq.setp
Skip frequency 1
0.00 ... 650.00 [Hz]
P1091.D (0.00)
Skip frequency 2
0.00 ... 650.00 [Hz]
P1092.D (0.00)
Skip frequency 3
0.00 ... 650.00 [Hz]
P1093.D (0.00)
Skip frequency 4
0.00 ... 650.00 [Hz]
P1094.D (0.00)
Max. frequency
0.00 ... 650.00 [Hz]
P1082.D (50.00)
Resultant max freq [Hz]
r1084
Bandwidth
Skip frequency
Skipfreq bandwidth
0.00 ... 10.00 [Hz]
P1101.D (2.00)
r1114
CO:Setp<-dir.ctrl.
Min. frequency
0.00 ... 650.00 [Hz]
P1080.D (0.00)
r1119
CO:Setp before RFG
RFG
5200_AFM.vsd
16.01.2006 V2.1
Setpoint channel
Additional Frequency Modifications (AFM)
Function diagram
MICROMASTER 440
- 5200 -

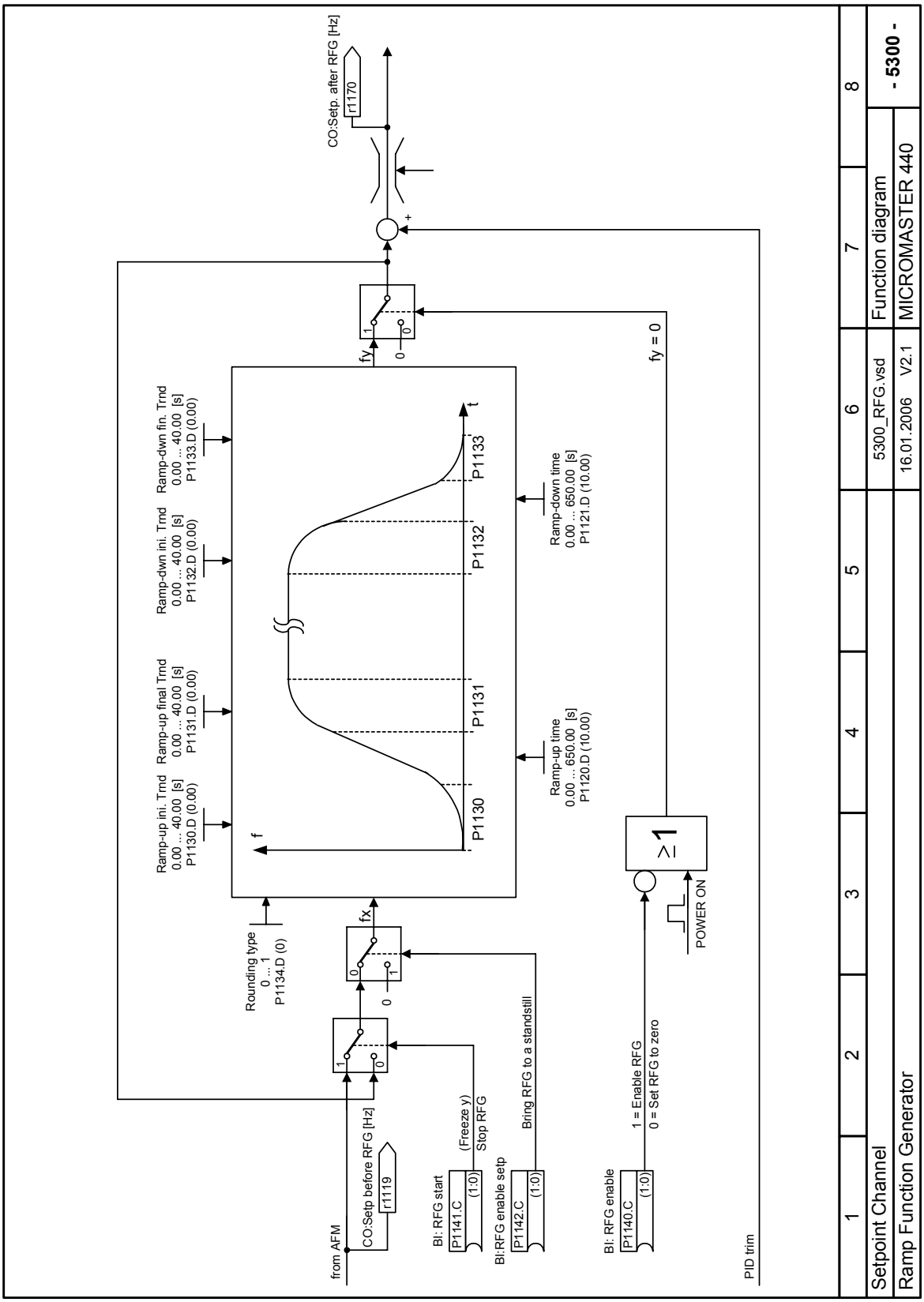
CO:Setp. after RFG [Hz]
r1170
Ramp-dwn fin. Trnd
0.00 ... 40.00 [s]
P1133.D (0.00)
Ramp-dwn ini. Trnd
0.00 ... 40.00 [s]
P1132.D (0.00)
Ramp-up final Trnd
0.00 ... 40.00 [s]
P1131.D (0.00)
Ramp-up ini. Trnd
0.00 ... 40.00 [s]
P1130.D (0.00)
Rounding type
0 ... 1
P1134.D (0)
f
t
P1130
P1131
P1132
P1133
Ramp-down time
0.00 ... 650.00 [s]
P1121.D (10.00)
Ramp-up time
0.00 ... 650.00 [s]
P1120.D (10.00)
fy
fx
fy = 0
≥1
POWER ON
from AFM
CO:Setp before RFG [Hz]
r1119
BI: RFG start
P1141.C
(1:0)
(Freeze y)
Stop RFG
BI:RFG enable setp
P1142.C
(1:0)
Bring RFG to a standstill
BI: RFG enable
P1140.C
(1:0)
1 = Enable RFG
0 = Set RFG to zero
PID trim
1
2
3
4
5
6
7
8
Setpoint Channel
Ramp Function Generator
5300_RFG.vsd
16.01.2006 V2.1
Function diagram
MICROMASTER 440
- 5300 -

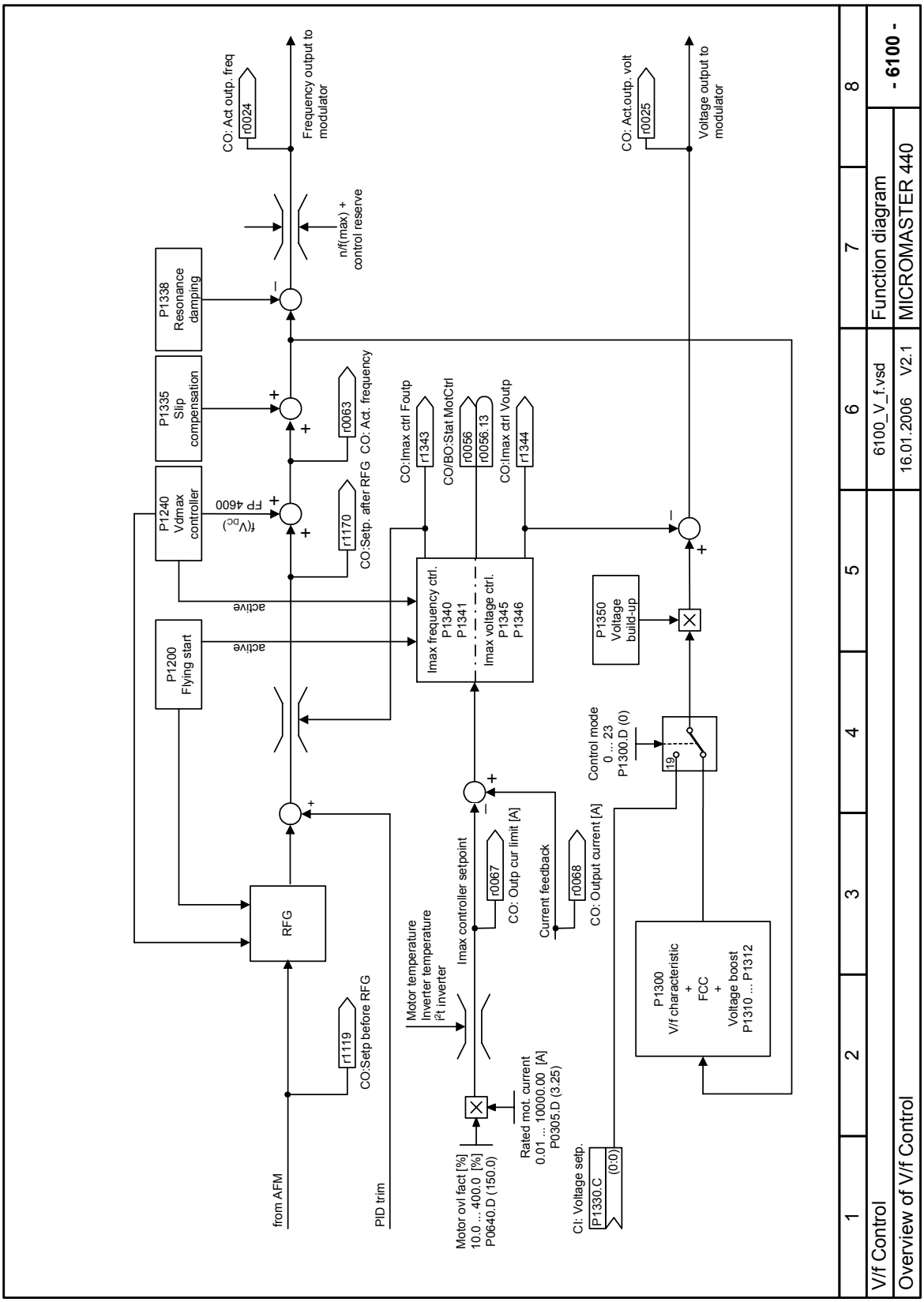
CO: Act outp. freq
r0024
Frequency output to modulator
n/f(max) + control reserve
P1338 Resonance damping
P1335 Slip compensation
P1240 Vdmax controller
P1200 Flying start
f(V_DC)
FP 4600
r0063
CO: Act. frequency
r1170
CO:Setp. after RFG
CO:Imax ctrl Foutp
r1343
CO/BO:Stat MotCtrl
r0056
r0056.13
CO:Imax ctrl Voutp
r1344
active
active
Imax frequency ctrl.
P1340
P1341
Imax voltage ctrl.
P1345
P1346
P1350 Voltage build-up
CO: Act.outp. volt
r0025
Voltage output to modulator
Control mode
0 ... 23
P1300.D (0)
r19
RFG
r1119
CO:Setp before RFG
from AFM
PID trim
Motor temperature
Inverter temperature
i²t inverter
Imax controller setpoint
r0067
CO: Outp cur limit [A]
Current feedback
r0068
CO: Output current [A]
Motor ovl fact [%]
10.0 ... 400.0 [%]
P0640.D (150.0)
Rated mot. current
0.01 ... 10000.00 [A]
P0305.D (3.25)
CI: Voltage setp.
P1330.C
(0:0)
P1300
V/f characteristic
+
FCC
+
Voltage boost
P1310 ... P1312
1
2
3
4
5
6
7
8
V/f Control
Overview of V/f Control
6100_V_f.vsd
16.01.2006 V2.1
Function diagram
MICROMASTER 440
- 6100 -

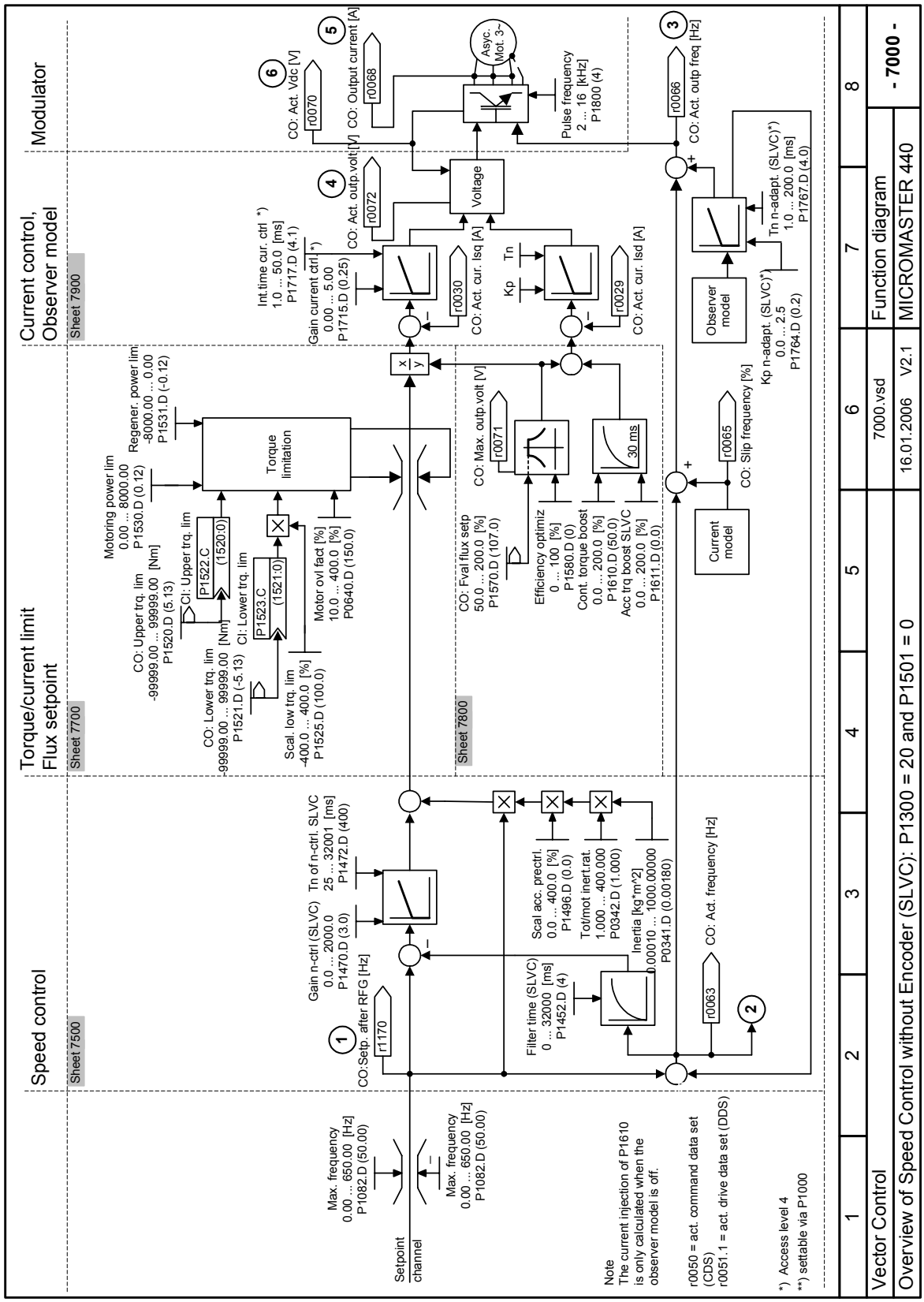
Speed control
Torque/current limit
Flux setpoint
Current control,
Observer model
Modulator
Sheet 7500
Sheet 7700
Sheet 7900
Sheet 7800
Max. frequency
0.00 ... 650.00 [Hz]
P1082.D (50.00)
Setpoint
channel
Max. frequency
0.00 ... 650.00 [Hz]
P1082.D (50.00)
CO:Setp. after RFG [Hz]
r1170
Gain n-ctrl (SLVC)
0.0 ... 2000.0
P1470.D (3.0)
Tn of n-ctrl. SLVC
25 ... 32001 [ms]
P1472.D (400)
Filter time (SLVC)
0 ... 32000 [ms]
P1452.D (4)
Scal acc. prectrl.
0.0 ... 400.0 [%]
P1496.D (0.0)
Tot/mot inert.rat.
1.000 ... 400.000
P0342.D (1.000)
Inertia [kg*m^2]
0.00010 ... 1000.00000
P0341.D (0.00180)
CO: Act. frequency [Hz]
r0063
Motoring power lim
0.00 ... 8000.00
P1530.D (0.12)
Regener. power lim
-8000.00 ... 0.00
P1531.D (-0.12)
CO: Upper trq. lim
-99999.00 ... 99999.00 [Nm]
P1520.D (5.13)
CI: Upper trq. lim
P1522.C
(1520:0)
CO: Lower trq. lim
-99999.00 ... 99999.00 [Nm]
P1521.D (-5.13)
CI: Lower trq. lim
P1523.C
(1521:0)
Scal. low trq. lim
-400.0 ... 400.0 [%]
P1525.D (100.0)
Motor ovl fact [%]
10.0 ... 400.0 [%]
P0640.D (150.0)
Torque
limitation
Int.time cur. ctrl *)
1.0 ... 50.0 [ms]
P1717.D (4.1)
Gain current ctrl *)
0.00 ... 5.00
P1715.D (0.25)
CO: Act. outp.volt [V]
r0072
CO: Act. cur. Isq [A]
r0030
Kp
Tn
CO: Act. cur. Isd [A]
r0029
Voltage
CO: Max. outp.volt [V]
r0071
CO: Fval flux setp
50.0 ... 200.0 [%]
P1570.D (107.0)
Efficiency optimiz
0 ... 100 [%]
P1580.D (0)
Cont. torque boost
0.0 ... 200.0 [%]
P1610.D (50.0)
Acc trq boost SLVC
0.0 ... 200.0 [%]
P1611.D (0.0)
30 ms
Current
model
CO: Slip frequency [%]
r0065
Observer
model
Kp n-adapt. (SLVC)*)
0.0 ... 2.5
P1764.D (0.2)
Tn n-adapt. (SLVC)*)
1.0 ... 200.0 [ms]
P1767.D (4.0)
CO: Act. Vdc [V]
r0070
CO: Output current [A]
r0068
Asyc.
Mot. 3~
Pulse frequency
2 ... 16 [kHz]
P1800 (4)
CO: Act. outp freq [Hz]
r0066
Note
The current injection of P1610
is only calculated when the
observer model is off.
r0050 = act. command data set
(CDS)
r0051.1 = act. drive data set (DDS)
*) Access level 4
**) settable via P1000
1
2
3
4
5
6
7
8
Vector Control
7000.vsd
Function diagram
- 7000 -
Overview of Speed Control without Encoder (SLVC): P1300 = 20 and P1501 = 0
16.01.2006
V2.1
MICROMASTER 440

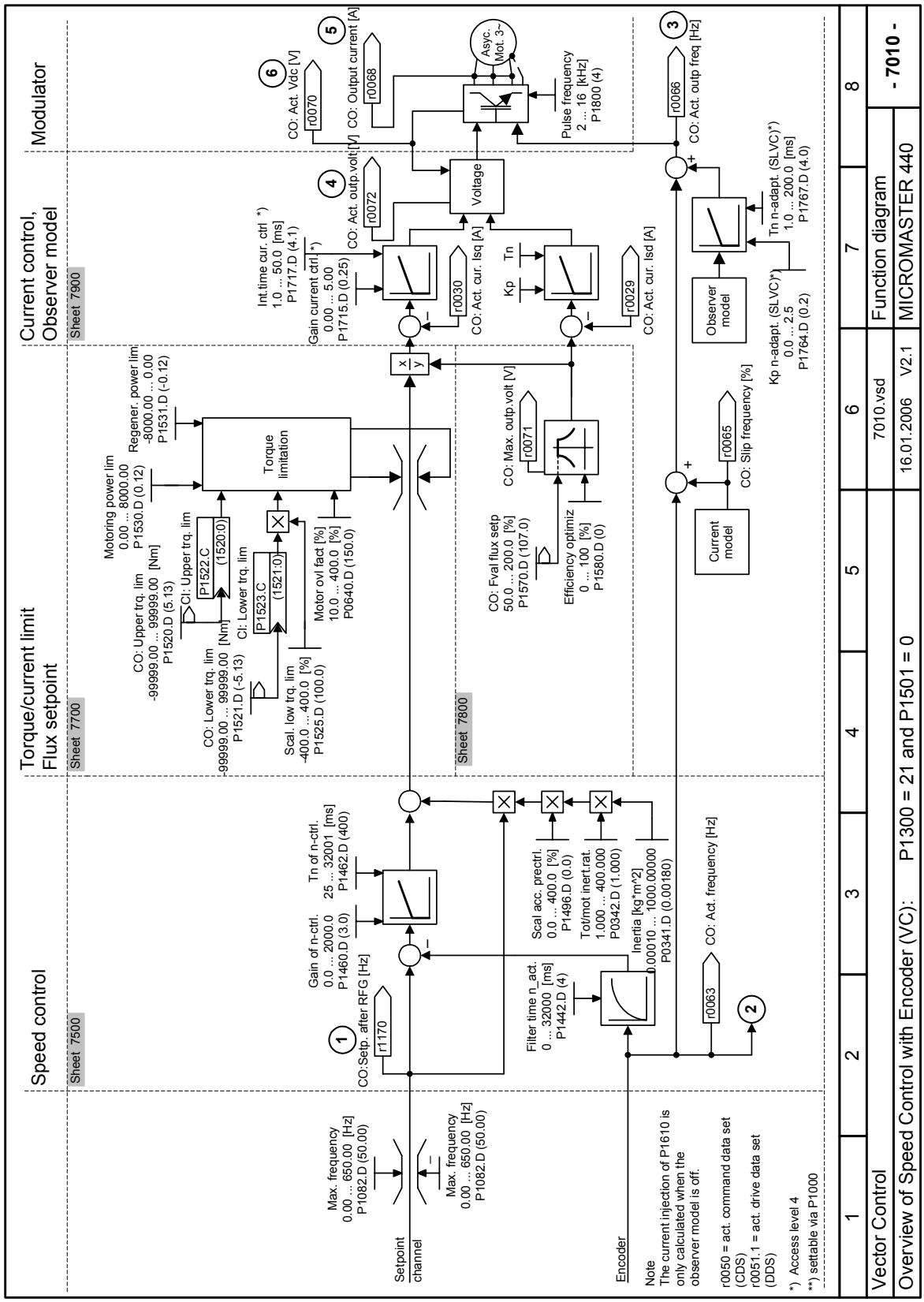
Speed control
Torque/current limit
Flux setpoint
Current control,
Observer model
Modulator
Sheet 7500
Sheet 7700
Sheet 7900
Sheet 7800
Torque limitation
Voltage
Observer model
Current model
Asyc. Mot. 3~
Setpoint channel
Max. frequency 0.00 ... 650.00 [Hz] P1082.D (50.00)
Encoder
Note
The current injection of P1610 is only calculated when the observer model is off.
r0050 = act. command data set (CDS)
r0051.1 = act. drive data set (DDS)
*) Access level 4
**) settable via P1000
Vector Control
Overview of Speed Control with Encoder (VC): P1300 = 21 and P1501 = 0
7010.vsd
16.01.2006 V2.1
Function diagram
MICROMASTER 440
- 7010 -

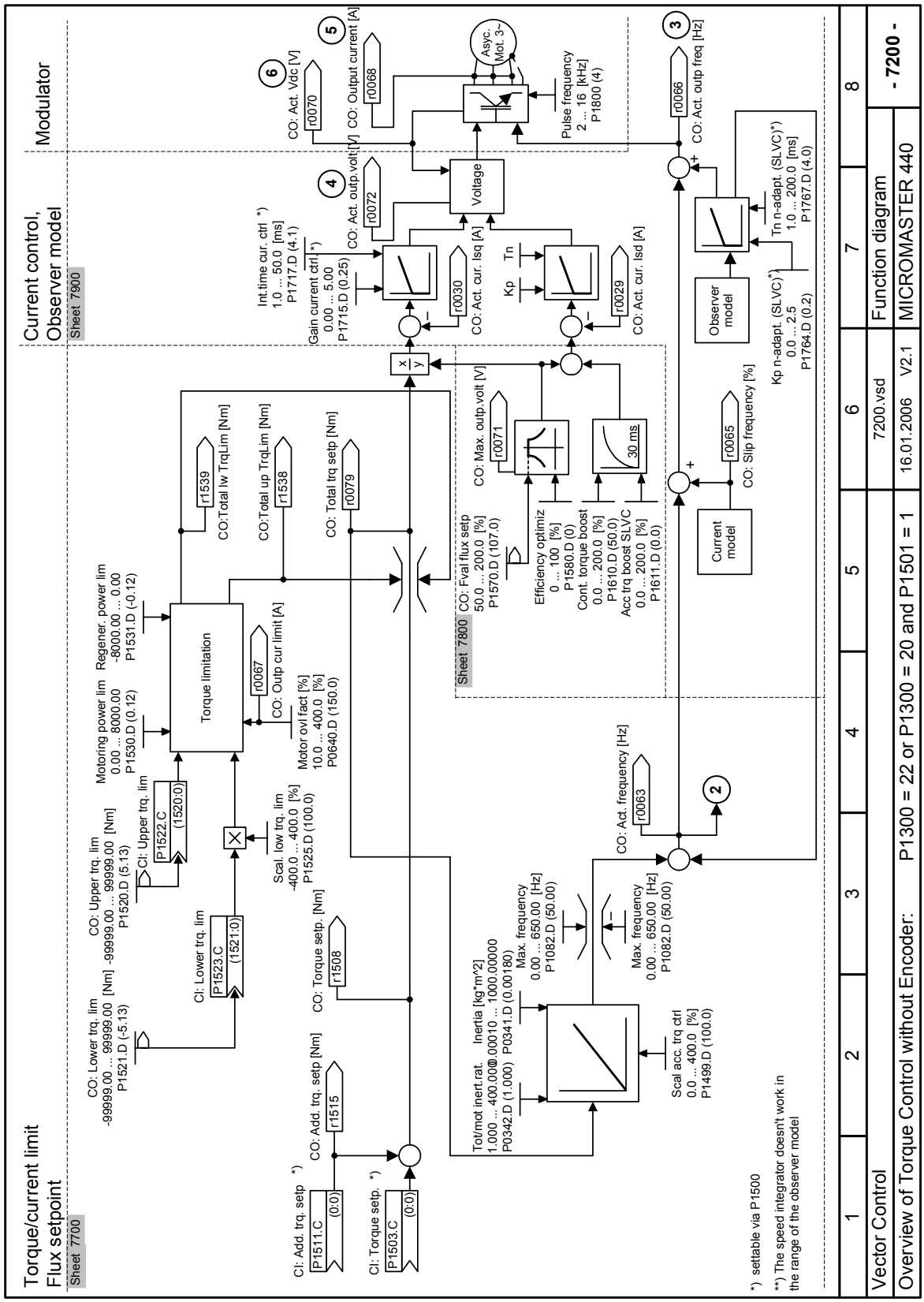
Torque/current limit
Flux setpoint
Sheet 7700
Current control,
Observer model
Sheet 7900
Modulator
Torque limitation
Voltage
Observer model
Current model
Sheet 7800
Asyc. Mot. 3~
CO: Lower trq. lim
-99999.00 ... 99999.00 [Nm]
P1521.D (-5.13)
CO: Upper trq. lim
-99999.00 ... 99999.00 [Nm]
P1520.D (5.13)
CI: Upper trq. lim
P1522.C
(1520:0)
CI: Lower trq. lim
P1523.C
(1521:0)
Motoring power lim
0.00 ... 8000.00
P1530.D (0.12)
Regener. power lim
-8000.00 ... 0.00
P1531.D (-0.12)
Scal. low trq. lim
-400.0 ... 400.0 [%]
P1525.D (100.0)
Motor ovl fact [%]
10.0 ... 400.0 [%]
P0640.D (150.0)
CO: Outp cur limit [A]
r0067
CO:Total lw TrqLim [Nm]
r1539
CO:Total up TrqLim [Nm]
r1538
CO: Total trq setp [Nm]
r0079
CO: Torque setp. [Nm]
r1508
CO: Add. trq. setp [Nm]
r1515
CI: Add. trq. setp *)
P1511.C
(0:0)
CI: Torque setp. *)
P1503.C
(0:0)
Tot/mot inert.rat.
1.000 ... 400.000
P0342.D (1.000)
Inertia [kg*m^2]
0.00010 ... 1000.00000
P0341.D (0.00180)
Max. frequency
0.00 ... 650.00 [Hz]
P1082.D (50.00)
Scal acc. trq ctrl
0.0 ... 400.0 [%]
P1499.D (100.0)
CO: Act. frequency [Hz]
r0063
CO: Fval flux setp
50.0 ... 200.0 [%]
P1570.D (107.0)
CO: Max. outp.volt [V]
r0071
Efficiency optimiz
0 ... 100 [%]
P1580.D (0)
Cont. torque boost
0.0 ... 200.0 [%]
P1610.D (50.0)
Acc trq boost SLVC
0.0 ... 200.0 [%]
P1611.D (0.0)
30 ms
CO: Slip frequency [%]
r0065
Kp n-adapt. (SLVC)*)
0.0 ... 2.5
P1764.D (0.2)
Tn n-adapt. (SLVC)*)
1.0 ... 200.0 [ms]
P1767.D (4.0)
Int.time cur. ctrl *)
1.0 ... 50.0 [ms]
P1717.D (4.1)
Gain current ctrl *)
0.00 ... 5.00
P1715.D (0.25)
CO: Act. cur. Isq [A]
r0030
CO: Act. cur. Isd [A]
r0029
CO: Act. outp.volt [V]
r0072
CO: Act. Vdc [V]
r0070
CO: Output current [A]
r0068
Pulse frequency
2 ... 16 [kHz]
P1800 (4)
CO: Act. outp freq [Hz]
r0066
*) settable via P1500
**) The speed integrator doesn't work in the range of the observer model
1
2
3
4
5
6
7
8
Vector Control
7200.vsd
Function diagram
- 7200 -
Overview of Torque Control without Encoder:
P1300 = 22 or P1300 = 20 and P1501 = 1
16.01.2006 V2.1
MICROMASTER 440

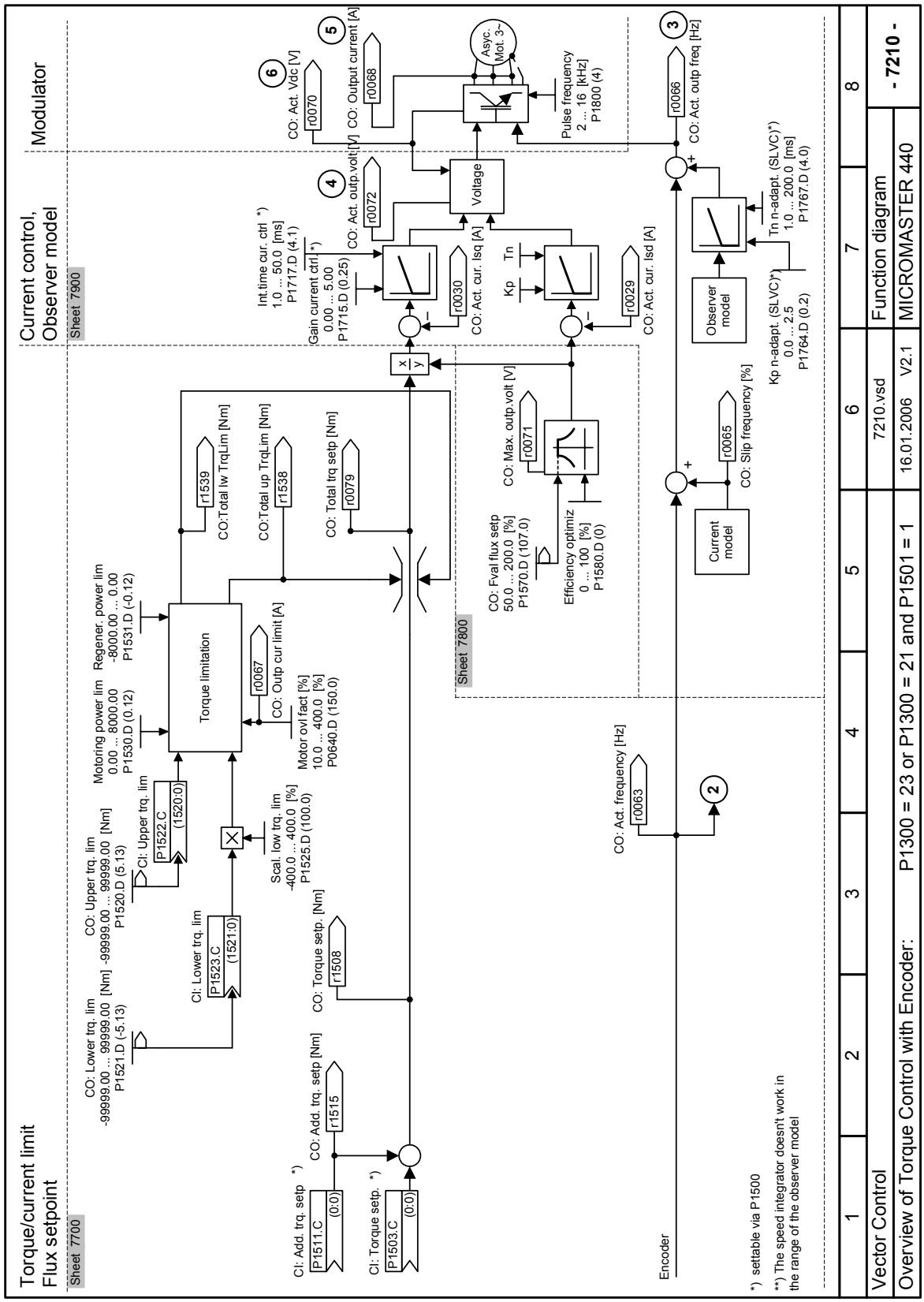
Torque/current limit
Flux setpoint
Sheet 7700
Current control,
Observer model
Sheet 7900
Modulator
Sheet 7800
CO: Lower trq. lim
-99999.00 ... 99999.00 [Nm]
P1521.D (-5.13)
CO: Upper trq. lim
-99999.00 ... 99999.00 [Nm]
P1520.D (5.13)
CI: Upper trq. lim
P1522.C
(1520:0)
CI: Lower trq. lim
P1523.C
(1521:0)
Motoring power lim
0.00 ... 8000.00
P1530.D (0.12)
Regener. power lim
-8000.00 ... 0.00
P1531.D (-0.12)
Torque limitation
r1539
CO:Total lw TrqLim [Nm]
CO:Total up TrqLim [Nm]
r1538
CO: Total trq setp [Nm]
r0079
r0067
CO: Outp cur limit [A]
Motor ovl fact [%]
10.0 ... 400.0 [%]
P0640.D (150.0)
Scal. low trq. lim
-400.0 ... 400.0 [%]
P1525.D (100.0)
CO: Torque setp. [Nm]
r1508
CO: Add. trq. setp [Nm]
r1515
CI: Add. trq. setp *)
P1511.C
(0:0)
CI: Torque setp. *)
P1503.C
(0:0)
Int.time cur. ctrl *)
1.0 ... 50.0 [ms]
P1717.D (4.1)
Gain current ctrl *)
0.00 ... 5.00
P1715.D (0.25)
CO: Act. outp.volt [V]
r0072
r0030
CO: Act. cur. Isq [A]
Kp
Tn
r0029
CO: Act. cur. Isd [A]
Voltage
Asyc.
Mot. 3~
Pulse frequency
2 ... 16 [kHz]
P1800 (4)
CO: Act. Vdc [V]
r0070
CO: Output current [A]
r0068
CO: Act. outp freq [Hz]
r0066
CO: Max. outp.volt [V]
r0071
CO: Fval flux setp
50.0 ... 200.0 [%]
P1570.D (107.0)
Efficiency optimiz
0 ... 100 [%]
P1580.D (0)
CO: Act. frequency [Hz]
r0063
Encoder
Current model
CO: Slip frequency [%]
r0065
Observer model
Kp n-adapt. (SLVC)*)
0.0 ... 2.5
P1764.D (0.2)
Tn n-adapt. (SLVC)*)
1.0 ... 200.0 [ms]
P1767.D (4.0)
*) settable via P1500
**) The speed integrator doesn't work in the range of the observer model
1
2
3
4
5
6
7
8
Vector Control
7210.vsd
Function diagram
- 7210 -
Overview of Torque Control with Encoder:
P1300 = 23 or P1300 = 21 and P1501 = 1
16.01.2006
V2.1
MICROMASTER 440

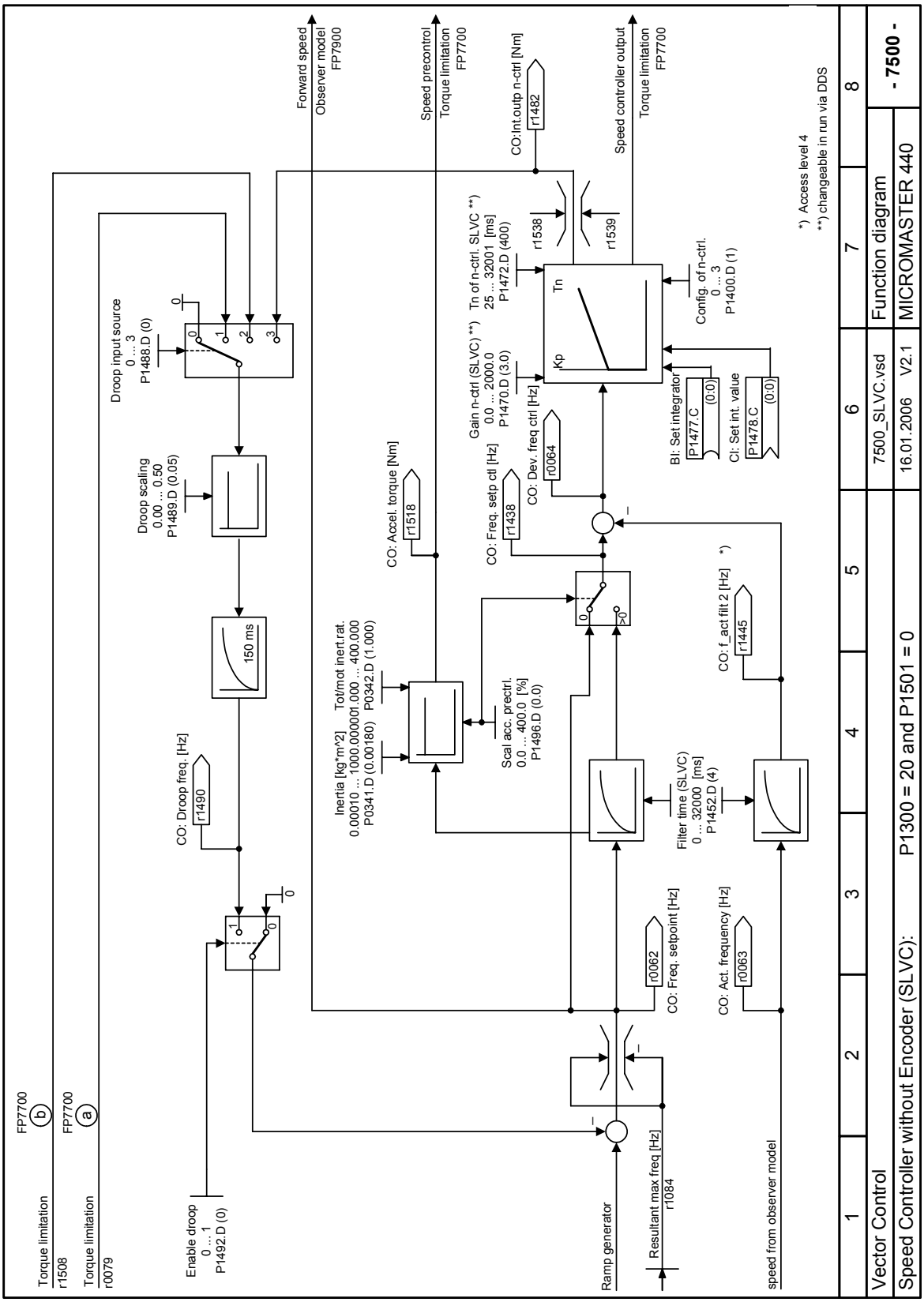
Torque limitation
r1508
FP7700
b
Torque limitation
r0079
FP7700
a
Enable droop
0 ... 1
P1492.D (0)
Droop input source
0 ... 3
P1488.D (0)
Droop scaling
0.00 ... 0.50
P1489.D (0.05)
150 ms
CO: Droop freq. [Hz]
r1490
Forward speed
Observer model
FP7900
Speed precontrol
Torque limitation
FP7700
CO: Accel. torque [Nm]
r1518
Inertia [kg*m^2]
0.00010 ... 1000.000
P0341.D (0.00180)
Tot/mot inert.rat.
001.000 ... 400.000
P0342.D (1.000)
Scal acc. prectrl.
0.0 ... 400.0 [%]
P1496.D (0.0)
CO: Freq. setp ctl [Hz]
r1438
CO: Dev. freq ctrl [Hz]
r0064
Gain n-ctrl (SLVC) **)
0.0 ... 2000.0
P1470.D (3.0)
Tn of n-ctrl. SLVC **)
25 ... 32001 [ms]
P1472.D (400)
CO:Int.outp n-ctrl [Nm]
r1482
r1538
r1539
Tn
Kp
Speed controller output
Torque limitation
FP7700
Config. of n-ctrl.
0 ... 3
P1400.D (1)
BI: Set integrator
P1477.C
(0:0)
CI: Set int. value
P1478.C
(0:0)
*) Access level 4
**) changeable in run via DDS
CO: f_act filt 2 [Hz] *)
r1445
Filter time (SLVC)
0 ... 32000 [ms]
P1452.D (4)
CO: Freq. setpoint [Hz]
r0062
CO: Act. frequency [Hz]
r0063
Ramp generator
Resultant max freq [Hz]
r1084
speed from observer model
1
2
3
4
5
6
7
8
Vector Control
7500_SLVC.vsd
Function diagram
- 7500 -
Speed Controller without Encoder (SLVC):
P1300 = 20 and P1501 = 0
16.01.2006 V2.1
MICROMASTER 440

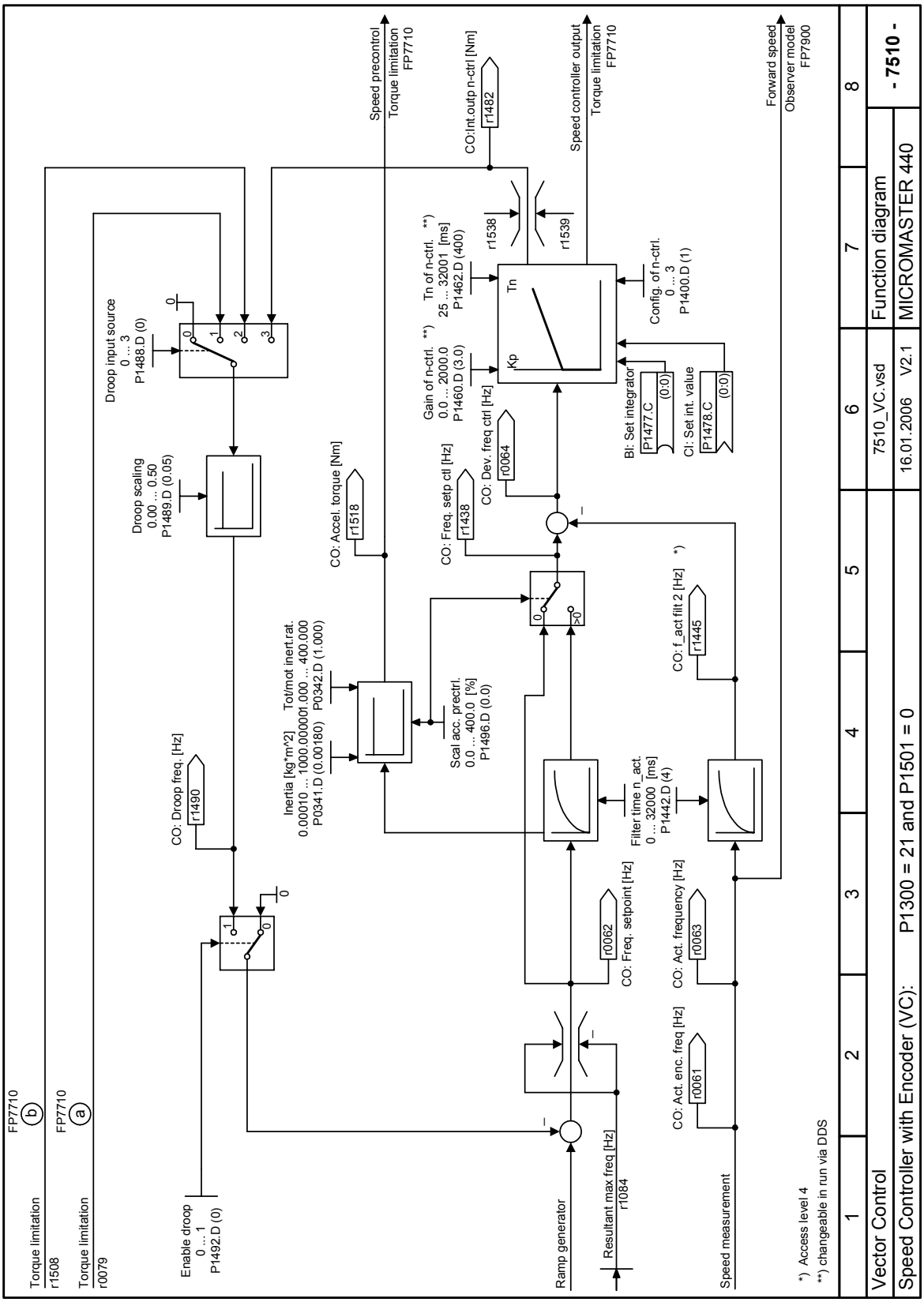
Torque limitation
r1508
FP7710
b
Torque limitation
r0079
FP7710
a
Droop input source
0 ... 3
P1488.D (0)
Droop scaling
0.00 ... 0.50
P1489.D (0.05)
CO: Droop freq. [Hz]
r1490
Enable droop
0 ... 1
P1492.D (0)
Inertia [kg*m^2]
0.00010 ... 1000.000
P0341.D (0.00180)
Tot/mot inert.rat.
001.000 ... 400.000
P0342.D (1.000)
Scal acc. prectrl.
0.0 ... 400.0 [%]
P1496.D (0.0)
CO: Accel. torque [Nm]
r1518
Speed precontrol
Torque limitation
FP7710
CO: Freq. setp ctl [Hz]
r1438
CO: Dev. freq ctrl [Hz]
r0064
Gain of n-ctrl. **)
0.0 ... 2000.0
P1460.D (3.0)
Tn of n-ctrl. **)
25 ... 32001 [ms]
P1462.D (400)
CO:Int.outp n-ctrl [Nm]
r1482
r1538
r1539
Speed controller output
Torque limitation
FP7710
Kp
Tn
Bi: Set integrator
P1477.C
(0:0)
Ci: Set int. value
P1478.C
(0:0)
Config. of n-ctrl.
0 ... 3
P1400.D (1)
Forward speed
Observer model
FP7900
CO: f_act filt 2 [Hz] *)
r1445
Filter time n_act.
0 ... 32000 [ms]
P1442.D (4)
CO: Freq. setpoint [Hz]
r0062
CO: Act. frequency [Hz]
r0063
CO: Act. enc. freq [Hz]
r0061
Ramp generator
Resultant max freq [Hz]
r1084
Speed measurement
*) Access level 4
**) changeable in run via DDS
1
2
3
4
5
6
7
8
Vector Control
7510_VC.vsd
16.01.2006 V2.1
Function diagram
MICROMASTER 440
- 7510 -
Speed Controller with Encoder (VC): P1300 = 21 and P1501 = 0

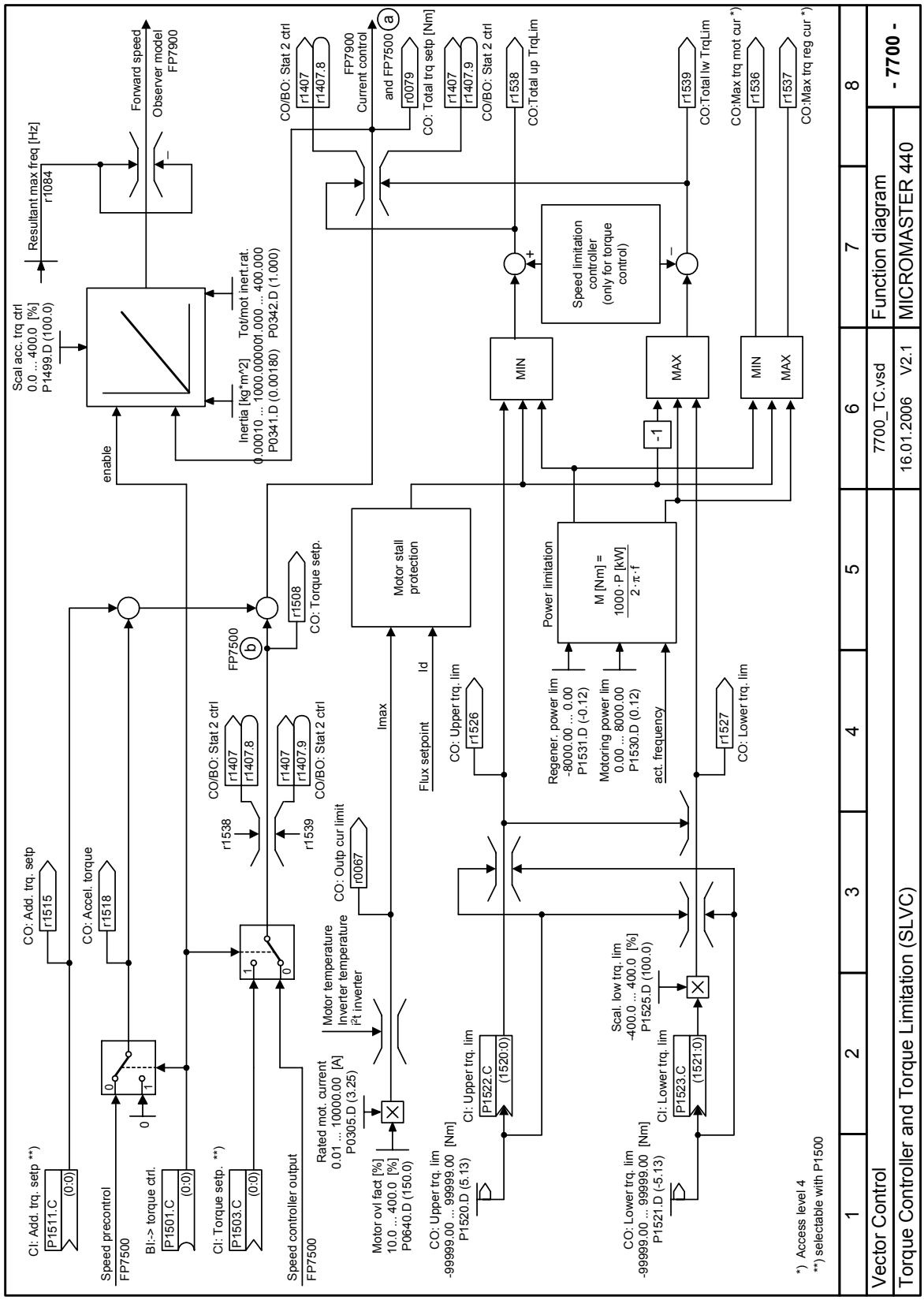
Scal acc. trq ctrl
0.0 ... 400.0 [%]
P1499.D (100.0)
Resultant max freq [Hz]
r1084
Forward speed
Observer model
FP7900
Inertia [kg*m^2]
0.00010 ... 1000.00000
P0341.D (0.00180)
Tot/mot inert.rat.
1.000 ... 400.000
P0342.D (1.000)
enable
CO/BO: Stat 2 ctrl
r1407
r1407.8
FP7900
Current control
and FP7500
a
r0079
CO: Total trq setp [Nm]
r1407
r1407.9
CO/BO: Stat 2 ctrl
r1538
CO:Total up TrqLim
Speed limitation
controller
(only for torque
control)
MIN
MAX
-1
r1539
CO:Total lw TrqLim
CO:Max trq mot cur *)
r1536
r1537
CO:Max trq reg cur *)
CO: Add. trq. setp
r1515
CO: Accel. torque
r1518
CI: Add. trq. setp **)
P1511.C
(0:0)
Speed precontrol
FP7500
BI:-> torque ctrl.
P1501.C
(0:0)
CI: Torque setp. **)
P1503.C
(0:0)
Speed controller output
FP7500
FP7500
b
r1508
CO: Torque setp.
CO/BO: Stat 2 ctrl
r1407
r1407.8
r1407
r1407.9
CO/BO: Stat 2 ctrl
r1538
r1539
CO: Outp cur limit
r0067
Motor temperature
Inverter temperature
I²t inverter
Rated mot. current
0.01 ... 10000.00 [A]
P0305.D (3.25)
Motor ovl fact [%]
10.0 ... 400.0 [%]
P0640.D (150.0)
Motor stall
protection
Imax
Id
Flux setpoint
CO: Upper trq. lim
r1526
CI: Upper trq. lim
P1522.C
(1520:0)
CO: Upper trq. lim
-99999.00 ... 99999.00 [Nm]
P1520.D (5.13)
Power limitation
M [Nm] =
1000 · P [kW]
2 · π · f
Regener. power lim
-8000.00 ... 0.00
P1531.D (-0.12)
Motoring power lim
0.00 ... 8000.00
P1530.D (0.12)
act. frequency
r1527
CO: Lower trq. lim
Scal. low trq. lim
-400.0 ... 400.0 [%]
P1525.D (100.0)
CI: Lower trq. lim
P1523.C
(1521:0)
CO: Lower trq. lim
-99999.00 ... 99999.00 [Nm]
P1521.D (-5.13)
*) Access level 4
**) selectable with P1500
1
2
3
4
5
6
7
8
Vector Control
7700_TC.vsd
16.01.2006
V2.1
Function diagram
MICROMASTER 440
- 7700 -
Torque Controller and Torque Limitation (SLVC)

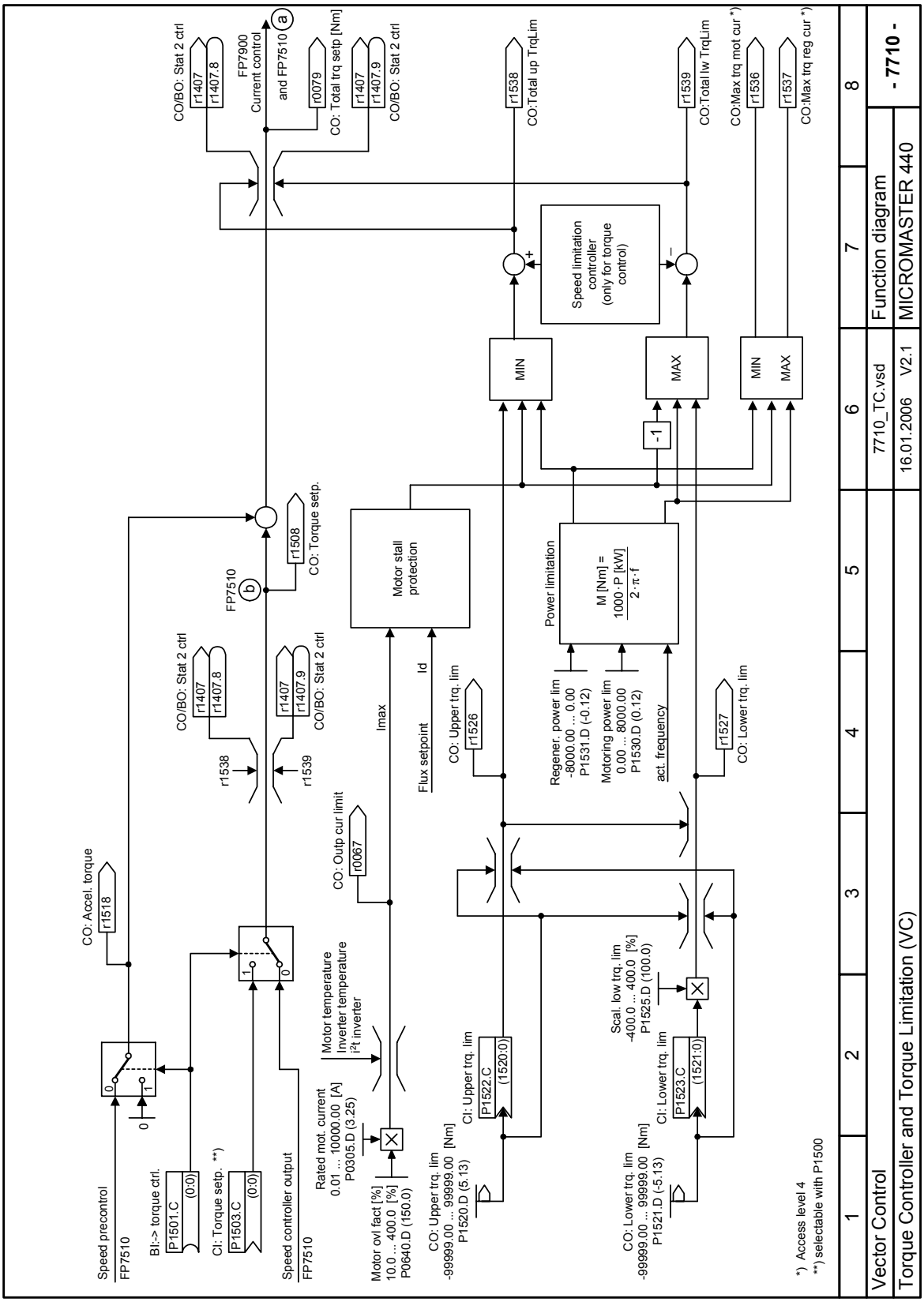
CO/BO: Stat 2 ctrl
r1407
r1407.8
FP7900
Current control
and FP7510
a
r0079
CO: Total trq setp [Nm]
r1407
r1407.9
CO/BO: Stat 2 ctrl
r1538
CO:Total up TrqLim
r1539
CO:Total lw TrqLim
CO:Max trq mot cur *)
r1536
r1537
CO:Max trq reg cur *)
Speed limitation controller (only for torque control)
MIN
MAX
-1
MIN
MAX
r1508
CO: Torque setp.
FP7510
b
Motor stall protection
Power limitation
M [Nm] = 1000 · P [kW] / 2 · π · f
CO/BO: Stat 2 ctrl
r1407
r1407.8
r1407
r1407.9
CO/BO: Stat 2 ctrl
r1538
r1539
Imax
Id
Flux setpoint
CO: Upper trq. lim
r1526
Regener. power lim
-8000.00 ... 0.00
P1531.D (-0.12)
Motoring power lim
0.00 ... 8000.00
P1530.D (0.12)
act. frequency
r1527
CO: Lower trq. lim
CO: Accel. torque
r1518
CO: Outp cur limit
r0067
Motor temperature
Inverter temperature
i²t inverter
Rated mot. current
0.01 ... 10000.00 [A]
P0305.D (3.25)
Motor ovl fact [%]
10.0 ... 400.0 [%]
P0640.D (150.0)
CO: Upper trq. lim
-99999.00 ... 99999.00 [Nm]
P1520.D (5.13)
CI: Upper trq. lim
P1522.C
(1520:0)
Scal. low trq. lim
-400.0 ... 400.0 [%]
P1525.D (100.0)
CI: Lower trq. lim
P1523.C
(1521:0)
CO: Lower trq. lim
-99999.00 ... 99999.00 [Nm]
P1521.D (-5.13)
Speed precontrol
FP7510
BI:-> torque ctrl.
P1501.C
(0:0)
CI: Torque setp. **)
P1503.C
(0:0)
Speed controller output
FP7510
*) Access level 4
**) selectable with P1500
1
2
3
4
5
6
7
8
Vector Control
Torque Controller and Torque Limitation (VC)
7710_TC.vsd
16.01.2006
V2.1
Function diagram
MICROMASTER 440
- 7710 -

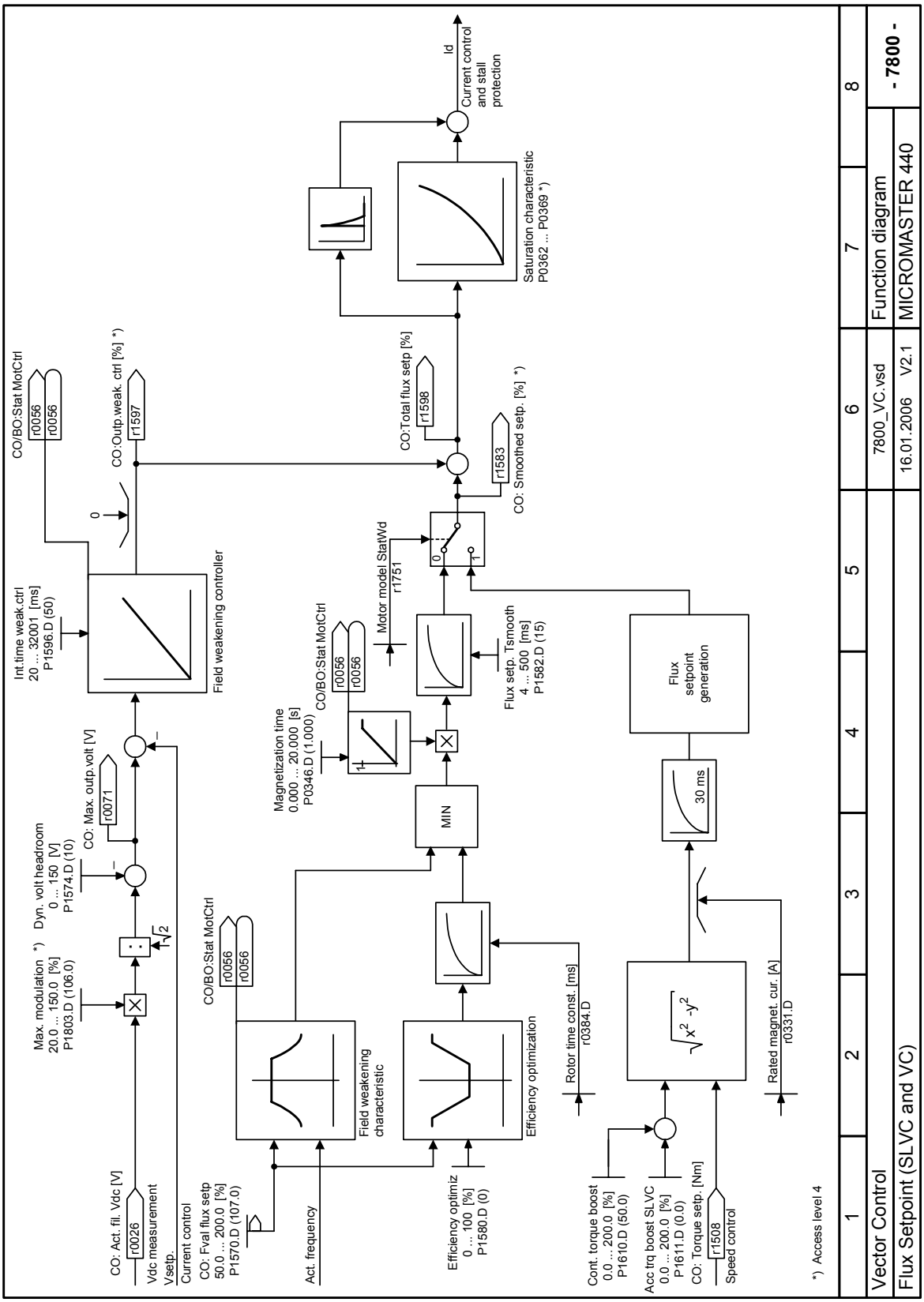
CO: Act. fil. Vdc [V]
r0026
Vdc measurement
Vsetp.
Current control
CO: Fval flux setp
50.0 ... 200.0 [%]
P1570.D (107.0)
Act. frequency
Max. modulation *)
20.0 ... 150.0 [%]
P1803.D (106.0)
Dyn. volt headroom
0 ... 150 [V]
P1574.D (10)
CO: Max. outp.volt [V]
r0071
CO/BO:Stat MotCtrl
r0056
r0056
Field weakening characteristic
Efficiency optimiz
0 ... 100 [%]
P1580.D (0)
Efficiency optimization
Int.time weak.ctrl
20 ... 32001 [ms]
P1596.D (50)
Field weakening controller
CO:Outp.weak. ctrl [%] *)
r1597
Magnetization time
0.000 ... 20.000 [s]
P0346.D (1.000)
MIN
Motor model StatWd
r1751
Flux setp. Tsmooth
4 ... 500 [ms]
P1582.D (15)
CO:Total flux setp [%]
r1598
CO: Smoothed setp. [%] *)
r1583
Saturation characteristic
P0362 ... P0369 *)
Id
Current control and stall protection
Rotor time const. [ms]
r0384.D
Cont. torque boost
0.0 ... 200.0 [%]
P1610.D (50.0)
Acc trq boost SLVC
0.0 ... 200.0 [%]
P1611.D (0.0)
CO: Torque setp. [Nm]
r1508
Speed control
Rated magnet. cur. [A]
r0331.D
30 ms
Flux setpoint generation
*) Access level 4
1
2
3
4
5
6
7
8
Vector Control
7800_VC.vsd
16.01.2006 V2.1
Function diagram
MICROMASTER 440
- 7800 -
Flux Setpoint (SLVC and VC)

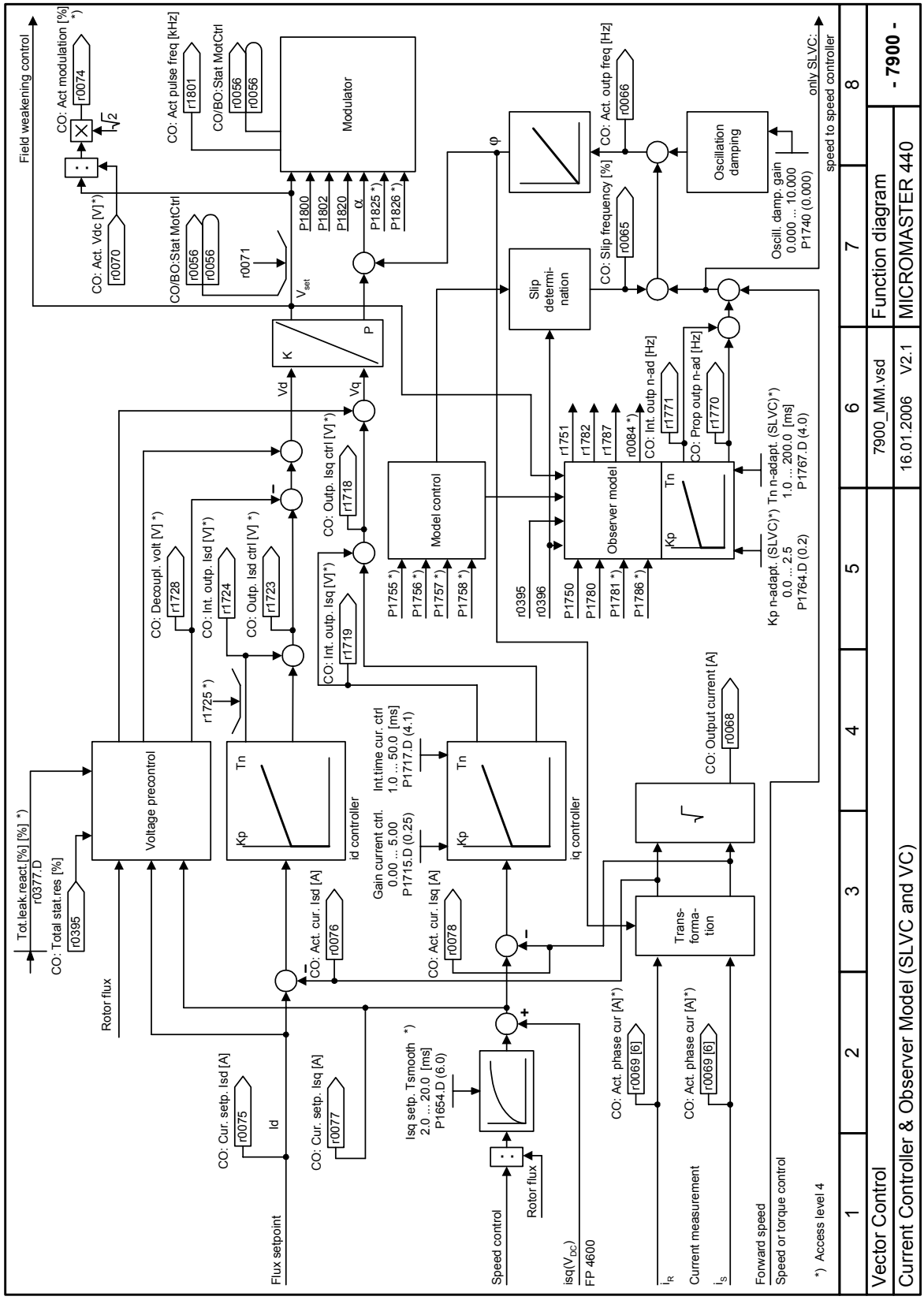
Field weakening control
CO: Act modulation [%] *)
r0074
√2
CO: Act. Vdc [V]*)
r0070
CO: Act pulse freq [kHz]
r1801
CO/BO:Stat MotCtrl
r0056
r0056
Modulator
P1800
P1802
P1820
α
P1825 *)
P1826 *)
r0071
Vset
K
P
Vd
Vq
CO: Act. outp freq [Hz]
r0066
Oscillation damping
only SLVC: speed to speed controller
φ
Slip determi-nation
CO: Slip frequency [%]
r0065
Oscill. damp. gain
0.000 ... 10.000
P1740 (0.000)
CO: Decoupl. volt [V] *)
r1728
CO: Int. outp. Isd [V]*)
r1724
CO: Outp. Isd ctrl [V] *)
r1723
CO: Outp. Isq ctrl [V] *)
r1718
CO: Int. outp. Isq [V]*)
r1719
r1725 *)
Model control
P1755 *)
P1756 *)
P1757 *)
P1758 *)
r1751
r1782
r1787
r0084 *)
CO: Int. outp n-ad [Hz]
r1771
CO: Prop outp n-ad [Hz]
r1770
Observer model
Tn
Kp
r0395
r0396
P1750
P1780
P1781 *)
P1786 *)
Tn n-adapt. (SLVC)*)
1.0 ... 200.0 [ms]
P1767.D (4.0)
Kp n-adapt. (SLVC)*)
0.0 ... 2.5
P1764.D (0.2)
Tot.leak.react.[%] [%] *)
r0377.D
CO: Total stat.res [%]
r0395
Voltage precontrol
Rotor flux
Tn
Kp
id controller
Int.time cur. ctrl
1.0 ... 50.0 [ms]
P1717.D (4.1)
Gain current ctrl.
0.00 ... 5.00
P1715.D (0.25)
iq controller
CO: Output current [A]
r0068
√
CO: Act. cur. Isd [A]
r0076
CO: Act. cur. Isq [A]
r0078
Trans-forma-tion
CO: Act. phase cur [A]*)
r0069 [6]
CO: Act. phase cur [A]*)
r0069 [6]
CO: Cur. setp. Isd [A]
r0075
Id
CO: Cur. setp. Isq [A]
r0077
Isq setp. Tsmooth *)
2.0 ... 20.0 [ms]
P1654.D (6.0)
Rotor flux
Flux setpoint
Speed control
isq(VDC)
FP 4600
iR
Current measurement
iS
Forward speed
Speed or torque control
*) Access level 4
1
2
3
4
5
6
7
8
Vector Control
Current Controller & Observer Model (SLVC and VC)
7900_MM.vsd
16.01.2006
V2.1
Function diagram
MICROMASTER 440
- 7900 -

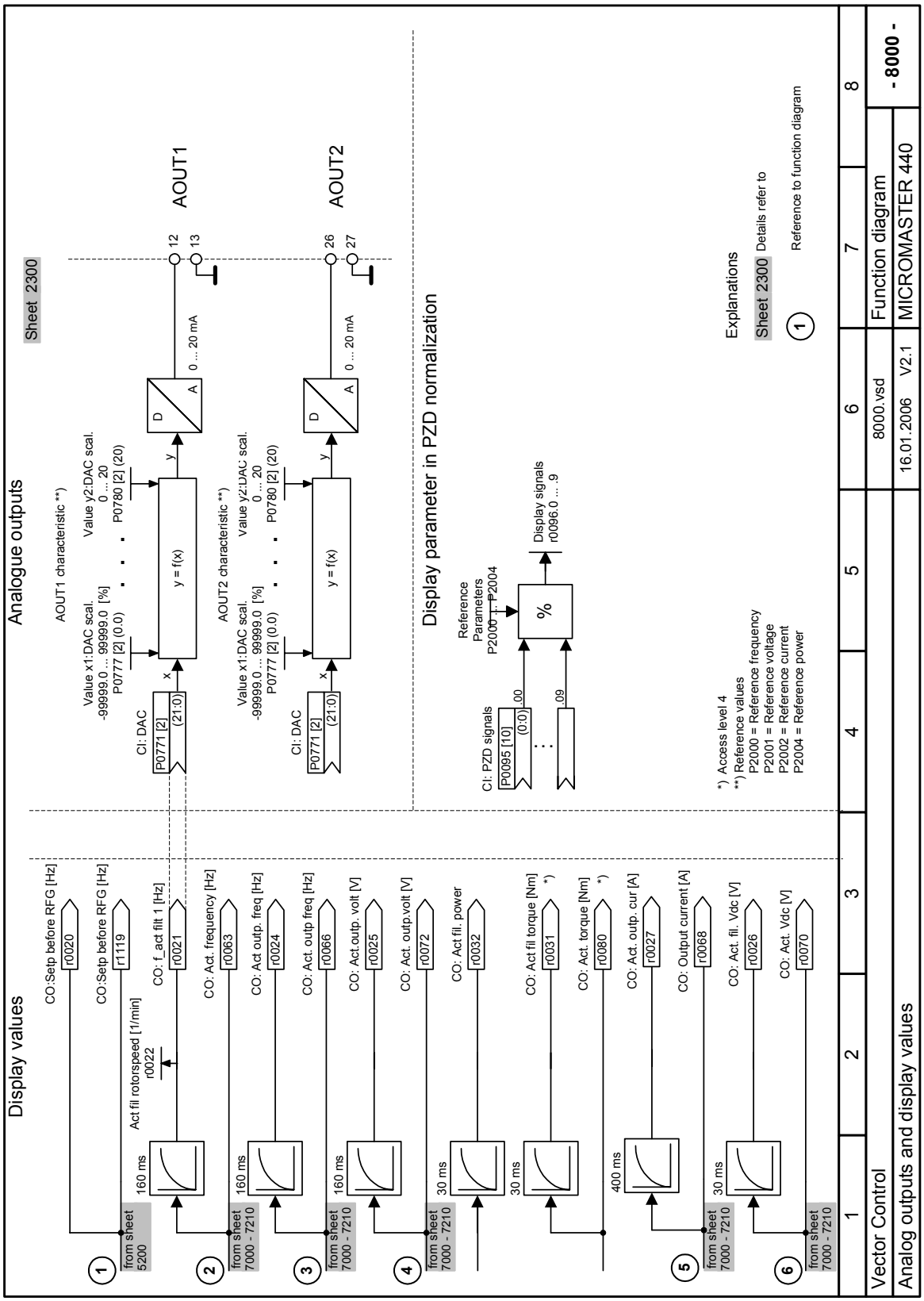
Analogue outputs
Sheet 2300
AOUT1
AOUT2
AOUT1 characteristic **)
AOUT2 characteristic **)
Value x1:DAC scal.
-99999.0 ... 99999.0 [%]
P0777 [2] (0.0)
Value y2:DAC scal.
0 ... 20
P0780 [2] (20)
CI: DAC
P0771 [2]
(21:0)
y = f(x)
0 ... 20 mA
Display parameter in PZD normalization
Reference Parameters
P2000 ... P2004
CI: PZD signals
P0095 [10]
(0:0)
Display signals
r0096.0 ... 9
Explanations
Sheet 2300 Details refer to
Reference to function diagram
*) Access level 4
**) Reference values
P2000 = Reference frequency
P2001 = Reference voltage
P2002 = Reference current
P2004 = Reference power
Display values
CO:Setp before RFG [Hz]
r0020
r1119
Act fil rotorspeed [1/min]
r0022
CO: f_act filt 1 [Hz]
r0021
CO: Act. frequency [Hz]
r0063
CO: Act outp. freq [Hz]
r0024
CO: Act. outp freq [Hz]
r0066
CO: Act.outp. volt [V]
r0025
CO: Act. outp.volt [V]
r0072
CO: Act fil. power
r0032
CO: Act fil torque [Nm]
r0031
CO: Act. torque [Nm]
r0080
CO: Act. outp. cur [A]
r0027
CO: Output current [A]
r0068
CO: Act. fil. Vdc [V]
r0026
CO: Act. Vdc [V]
r0070
160 ms
30 ms
400 ms
from sheet 5200
from sheet 7000 - 7210
Vector Control
Analog outputs and display values
8000.vsd
16.01.2006 V2.1
Function diagram
MICROMASTER 440
- 8000 -

5 Faults and Alarms

5.1 Fault messages

In the event of a failure, the inverter switches off and a fault code appears on the display.

NOTE
To reset the fault code, one of three methods listed below can be used:
1. Cycle the power to the drive.
2. Press the button on the BOP or AOP.
3. Via Digital Input 3 (default setting)

Fault messages are stored in parameter r0947 under their code number (e.g. F0003 = 3). The associated error value is found in parameter r0949. The value 0 is entered if a fault has no error value. It is furthermore possible to read out the point in time that a fault occurred (r0948) and the number of fault messages (P0952) stored in Parameter r0947.

F0001 Overcurrent STOP II

Quit
Remove fault and reset fault memory by disconnecting the
- drive converter from the line supply and powering-up again
- Press the Fn key on the BOP or AOP
- Acknowledge fault P2103, P2104
- P0952 (complete fault memory)

Cause
- short-circuit at the output
- ground fault
- excessively large motor (the motor power rating P0307 is greater than the inverter power r0206)
- defective final stage (end stage)

Diagnosis & Remedy
Please check the following:
- are the cable lengths within the limit values ?
- does the motor cable or motor have either a short-circuit or ground fault ?
- do the motor parameters correspond to those of the motor being used ?
- is the motor overloaded or stalled (locked rotor) ?
- increase the accelerating time.
- reduce the gain
- use a motor with a lower power rating
- is the stator resistance value (P0350) correct ?

F0002 Overvoltage STOP II

Quit
Refer to F0001

Cause
- DC link voltage (r0026) higher than the overvoltage threshold (refer to parameter r0026)
- ground fault

Diagnosis & Remedy
Please check the following:
- is the line supply voltage within the permissible range?
- has the DC current DC link monitoring been enabled (P1240) and correctly parameterized?
- extend the deceleration ramp (ramp-down time P1121, P1135)
- remove the ground fault
- is the required braking power within the permissible limits?

NOTE
- a higher moment of inertia requires longer deceleration times; if required, use a braking resistor.
- overvoltage can either be caused by an excessively high line supply voltage or by the fact that the motor is generating (regenerative mode).
- the motor can be generating as it is decelerating quickly or due to the fact that an active load is driving the motor.

F0003 Undervoltage STOP II

Quit
Refer to F0001

Cause
- line voltage failed
- shock stressing outside the permissible limits.

Diagnosis & Remedy
Please check the following:
- is the line supply voltage within the permissible range?
- is the line supply voltage stable with respect to sporadic failures and voltage dips (brown-outs) ?

F0004 Inverter overtemperature STOP II

Quit
Refer to F0001

Cause
- inadequate cooling
- ambient temperature is too high.

ambient temperature is too high.

Diagnosis & Remedy
Please check the following:
- is the pulse frequency P1800 set to the factory setting ? If required reset P1800.
- does the ambient temperature lie within the permissible limits ?
- reduce the load and / or ensure adequate cooling

Please check the following:
- does the fan rotate if the inverter is operational ?

F0005 Inverter I2T STOP II

Quit
Refer to F0001

Cause
- inverter overloaded.
- load duty cycle too high.
- the motor power rating (P0307) is greater than that of the inverter (r0206).
- 100 % overload reached (refer to utilization r0036)

Diagnosis & Remedy
Please check the following:
- does the load duty cycle lie within the permissible limits?
- use a motor with a lower rating (motor power P0307 is greater than Is inverter power r0206)

F0011 Motor overtemperature STOP II

Quit
Refer to F0001

Cause
Motor overloaded

Diagnosis & Remedy
Please check the following:
- is the load cycle correct ?
- are the rated/nominal motor overtemperatures correct (P0626-P0628) ?
- is the alarm threshold correct for the motor temperature (P0604) ?

F0012 No inverter temperature signal STOP I

Quit
Refer to F0001

Cause
- wire breakage of the inverter-temperature sensor (heatsink)

Diagnosis & Remedy
- replace the inverter

F0015 No motor temperature signal STOP II

Quit
Refer to F0001

Cause
- motor temperature sensor either short-circuited or open-circuit.
- if it is identified that a signal has been lost, then the temperature monitoring changes-over to monitoring based on the thermal-motor model.

F0020 Line supply phase missing STOP II

Quit
Refer to F0001

Cause
- a fault is output if one of the three input phases is missing, the pulses are enabled and a load is present

Diagnosis & Remedy
Please check the following:
- are the power connections ok ?

F0021 Ground fault STOP II

Quit
Refer to F0001

Cause
- the fault occurs if the sum of the phase currents is greater than 5 % of the inverter rated current.

NOTE
- this fault only occurs for inverters with 3 current sensors (sizes D to F, GX, FX).

Diagnosis & Remedy
Please check the following:
- are the connections at the motor terminal boxes o.k. ?
- are the motor cable connections at the inverter o.k. ?

F0022 Hardware monitoring active STOP II

Quit
Refer to F0001

Cause
This fault (r0947 = 22 and r0949 = 1) occurs under the following circumstances:
(1) DC link overcurrent condition = IGBT short-circuit
(2) Braking chopper short-circuit
(3) Ground fault
(4) I/O module not correctly inserted
For the following sizes the above faults can occur:
- size A to C (1),(2),(3),(4)
- size D to E (1),(2), (4)
- size F (1),(2)

The following faults only occur in conjunction with sizes FX / GX:
- UCE faults are identified if r0947 = 22 and the fault value r0949 = 12 or 13 or 14.
- I2C bus error is identified if r0947 = 22 and the fault value r0949 = 21 (power-down and then power-up again).

NOTE
All of these faults are assigned to a signal in the power module. This means that it is not possible to determine which fault actually occurred.

Diagnosis & Remedy
You must first identify as to whether the fault is permanent (i.e. the inverter cannot be started without the fault occurring) or it sporadically occurs (occasionally occurs or under certain operating conditions).
Permanent fault F0022:
- check whether the I/O module is correctly inserted (refer to the Operating Instructions).
- is there a ground fault or short-circuit at the inverter output or at an IGBT?
  You can identify this by disconnecting the motor cable.
  In the case that the fault occurs, if all of the external cables (with the exception from the line supply voltage) are disconnected, then with a high degree of probability, the drive unit is defective and must be repaired.

Sporadic fault F0022:
- this fault should be treated as "overcurrent". If fault F0022 sporadically occurs, the causes can be as follows:
- sudden load changes or mechanical obstructions
- extremely short ramp-up times (accelerating times)
- poor optimization of the sensorless closed-loop vector control
- incorrect braking resistor is installed with an excessively low resistance

F0023 Output fault STOP II

Quit
Refer to F0001

Cause
- one output phase has not been correctly connected.

Diagnosis & Remedy
Please check the following:
- are the connections at the motor terminal box o.k. ?
- are the motor cable connections at the inverter o.k. ?

F0024 Rectifier temperature too high STOP II

Quit
Refer to F0001

Cause
- inadequate cooling
- fan is not operational
- ambient temperature is too high.

Diagnosis & Remedy
Please check the following:
- does the fan rotate when the inverter is powered-up (A0520, A0521) ?
- is the pulse frequency set to the factory setting ? If required, reset.
- is the ambient temperature within the permissible limits (A0520, A0521) ?

F0030 Fan failed STOP II

Quit
Refer to F0001

Cause
- fan no longer functions

Diagnosis & Remedy
- fault cannot be suppressed if an AOP or BOP is connected.
- a new fan is required.

F0035 Restart after n STOP II

Quit
reset fault memory or Power On / Stop

Cause
- restart fault after n attempts, refer to P1211

F0040 Fault, for automatic calibration STOP II

Quit
Refer to F0001

Cause
- a calibration error has occurred for the automatic calibration of the analog inputs / outputs or the current actual value sensing.
- the calibration is only carried-out once in the factory.
- a fault F0040 is therefore only to be expected while the inverter is being manufactured and not in operation.

Diagnosis & Remedy
- change the drive

F0041 Failure, motor data identification STOP II

Quit

Refer to F0001

Cause

Motor data identification run unsuccessful (refer to fault value r0949):

- r0949 = 0: Load missing.
- r0949 = 1: Current limit was reached during the identification run.
- r0949 = 2: Identified stator resistance less than 0.1% or greater than 100%.
- r0949 = 3: Identified rotor resistance less than 0.1% or greater than 100%.
- r0949 = 4: Identified stator reactance less than 50% or greater than 500%
- r0949 = 5: Identified magnetizing reactance less than 50% or greater than 500%
- r0949 = 6: Identified rotor time constant less than 10ms or greater than 5s
- r0949 = 7: Identified total leakage reactance less than 5% or greater than 50%
- r0949 = 8: Identified stator leakage reactance less than 25% or greater than 250%
- r0949 = 9: Identified rotor leakage reactance less than 25% or greater than 250%
- r0949 = 20: Identified IGBT response voltage less than 0.5 or greater than 10V
- r0949 = 30: Current controller at voltage limit value
- r0949 = 40: Identified data set inconsistent; at least one identification run unsuccessful

NOTE

Percentage values based on the impedence Zb = Vmot,rated / sqrt(3) / Imot,rated

Diagnosis & Remedy

Please check the following:

- r0949 = 0: Is the motor connected to the inverter ?
- r0949 = 1-40: Is the motor data in P0304-P0311 correct ?
- r0949 = 1-40: Motor circuit configuration correct (star, delta configuration) ?

F0042 Fault/error when optimizing the speed controller STOP II

Quit

Refer to F0001

Cause

Automatic data identification run unsuccessful (refer to fault value r0949):

- r0949 = 0: Time slice overflow while waiting for a stable speed
- r0949 = 1: No matching/appropriate value when reading

F0051 Parameter EEPROM fault STOP II

Quit

Refer to F0001

Cause

- read or write operation while saving parameters in the EEPROM was unsuccessful.

Diagnosis & Remedy

- reset to factory setting and then re-parameterize
- if required, change the drive

F0052 Power stack fault STOP II

Quit

Refer to F0001

Cause

- read error, power data or invalid power module data.

Diagnosis & Remedy

- change the drive

F0053 I/O EEPROM fault STOP II

Quit

Refer to F0001

Cause

- fault with I/O EEPROM read operation or invalid data.

Diagnosis & Remedy

Please check the following:

- check I/O data and if required repeat the operation
- the installation of the I/O module in the inverter if required, replace the I/O module

F0054 Incorrect I/O module STOP II

Quit
Refer to F0001

Cause
- incorrect I/O module inserted.
- no ID of the I/O module found, no data.

Diagnosis & Remedy
Please check the following:
- check I/O data, if required repeat the operation
- the installation of the I/O module in the inverter if required, replace the I/O module

F0060 Asic time slice overflow STOP II

Quit
Refer to F0001

Cause
- internal communications failure/error

Diagnosis & Remedy
- if the error still occurs, replace the inverter.
- contact customer service!

F0070 CB setpoint fault STOP II

Quit
Refer to F0001

Cause
- no setpoints received via the communications bus during the telegram failure time.

Diagnosis & Remedy
- check the communications module (CB) and communications partner.

F0071 USS(BOP link) setpoint fault STOP II

Quit
Refer to F0001

Cause
- no setpoint was received via the USS during the telegram off time

Diagnosis & Remedy
- check USS master

F0072 USS(COMM link) setpoint fault STOP II

Quit
Refer to F0001

Cause
- no setpoints received via the USS during the telegram off time

Diagnosis & Remedy
- check USS master

F0080 ADC input signal lost STOP II

Quit
Refer to F0001

Cause
- wire breakage
- signal outside the limit values

F0085 External fault STOP II

Quit
Refer to F0001

Cause
- external fault as a result of command input via terminals.

Diagnosis & Remedy
- inhibit terminal input to initiate fault.

F0090 Signal loss, encoder STOP II

Quit
Refer to F0001

Cause
- encoder signal between the encoder and inverter is interrupted
- excessively large difference between the setpoint (reference) and actual frequency

Diagnosis & Remedy
Please check the following:
- is there an integrated encoder? If there is no integrated encoder, then set P0400 = 0 and select the operating mode sensorless closed-loop vector control (P1300 = 20 or 22)
- the connection between the encoder and the inverter
- is the encoder faulty? (select P1300 = 0, operation with fixed speed, check the encoder signal in r0061)
- increase the encoder signal threshold in P0492, P0494

F0101 Stack overflow STOP II

Quit
Refer to F0001

Cause
- software error or processor failure

Diagnosis & Remedy
- carry-out self-test routines

F0221 PID feedback below the minimum value STOP II

Quit
Refer to F0001

Cause
- PID feedback below the minimum value P2268.

Diagnosis & Remedy
- change value of P2268.
- set feedback gain.

F0222 PID feedback above maximum value STOP II

Quit
Refer to F0001

Cause
- PID feedback above maximum value P2267.

Diagnosis & Remedy
- change value of P2267.
- set the feedback gain.

F0422 No load applied to inverter STOP II

Quit
Refer to F0001

Cause
No Load is applied to the inverter.
As a result, some functions may not work as under normal load conditions.

F0450 Failure BIST tests STOP II

Quit
Refer to F0001

Cause
Self-test routine unsuccessful (refer to fault value r0949):
- r0949 = 1: Self-test routine for power module components unsuccessful
- r0949 = 2: Self-test routine for closed-loop control module components unsuccessful
- r0949 = 4: Several function tests were unsuccessful
- r0949 = 8: Several tests carried-out at the I/O module were unsuccessful (only MICROMASTER 420)
- r0949 = 16: Failure of the internal RAM at the switch-on test

Diagnosis & Remedy
- the drive is functional, but several functions are not correctly executed.
- replace the drive

F0452 Load torque fault detected STOP II

Quit

Refer to F0001

Cause

- load conditions at the motor signify a load torque fault (e.g. belt failure) or a mechanical fault

Diagnosis & Remedy

Please check the following:
- no braking, failure or destruction of the mechanical drive transmission line
- if required, lubricate the mechanical drive transmission line.

If you are using an external encoder, please check the following parameter settings:
- P2192 (delay time, load torque monitoring)

If you are operating within a specific speed range, please check the following:
- P2182 (load torque monitoring F1)
- P2183 (load torque monitoring F1f2)
- P2184 (load torque monitoring F1f3)
- P2185 (upper torque threshold 1)
- P2186 (lower torque threshold 1)
- P2187 (upper torque threshold 2)
- P2188 (lower torque threshold 2)
- P2189 (upper torque threshold 3)
- P2190 (lower torque threshold 3)
- P2192 (delay time, load torque monitoring)

F0453 Motor stalled STOP II

Quit

Refer to F0001

Cause

- up/ or down ramp too steep (excessive gradient)
- inverter connected to an already spinning motor without using the flying restart function
- motor incorrectly connected
- motor too small
- voltage boost P1611 for sensorless vector control too low

Diagnosis & Remedy

Please check the following:
- the motor connections
- increase the ramp-up time P1120 or the ramp-down time P1121
- activate the flying restart function P1200
- use a larger motor
- increase the voltage boost P1611 for sensorless closed-loop vector control
- use closed-loop vector control with encoder instead of sensorless closed-loop vector control.
- activate the V/f closed-loop control mode (P1300 less than 20) instead of closed-loop vector control

5.2 Alarm Messages

Alarm messages are stored in parameter r2110 under their code number (e.g. A0503 = 503) and can be read out from there.

A0501 Current limit value

Cause
- the motor power rating does not correspond to the inverter power rating
- motor cables are too long
- ground fault

Diagnosis & Remedy
Please check the following:
- does the motor power rating (P0307) match the inverter power rating (r0206) ?
- are the limit values for the cable lengths maintained ?
- does the motor cable or motor have a short-circuit or ground fault ?
- do the motor parameters correspond to those of the motor being used ?
- stator resistance value (P0350) correct ?
- is the motor overloaded or is the rotor locked (cannot rotate) ?
- ramp-up time P1120 too low ?

A0502 Overvoltage limit value

Cause
- the overvoltage limit value has been reached (actual value of the DC link voltage r0026 greater than r1242).

Diagnosis & Remedy
- if this alarm is permanently displayed, check the inverter input voltage.
- is the DC link voltage controller (Vdc_max controller) de-activated (refer to parameter P1240) ?
- short ramp times and/or large flywheel masses (moment of inertia) ?

A0503 Undervoltage limit value

Cause
- line supply has failed.
- line voltage and therefore also the DC link voltage (r0026) below the defined limit value (refer to parameter r0026).

Diagnosis & Remedy
- check the line voltage.

A0504 Inverter overtemperature

Cause
- alarm threshold of the inverter heatsink temperature (P0614) was exceeded; this results in a reduction of the pulse frequency and/or the output frequency (dependent on the parameterization in (P0610).

Diagnosis & Remedy
Please check the following:
- is the ambient temperature within the permissible limits ?
- are the load and load duty cycle within the permissible limits ?

A0505 Inverter I2T

Cause
- overload alarm limit P0294 is exceeded (refer to utilization r0036)
- the pulse frequency and/or the output frequency is reduced as a function of the setting of parameter P0290.

Diagnosis & Remedy
- check whether the load duty cycle lies within the permissible limits.

A0506 Inverter load duty cycle

Cause
- difference between the temperature at the heatsink and IGBT exceeds the alarm limit values.

Diagnosis & Remedy
- please ensure that the load duty cycle and load surge lie within the permissible limits.

A0510 Motor overtemperature

A0511 Motor overtemperature

Cause
- motor is overloaded.
- load duty cycle is exceeded.

Diagnosis & Remedy

Check, independently of the type of temperature monitoring:
- P0604 alarm threshold, motor overtemperature
- P0625 motor ambient temperature

If P0601 = 0 or 1, please check the following:
- is the motor data correct (rating plate)?, if not, carry-out a fast commissioning routine
- precise temperature values from the motor identification routine (P1910=1).
- is the motor weight correct (P0344)?
- the permissible overtemperature can be changed using P0626, P0627, P0628, if the motor is not a standard Siemens motor.

If P0601 = 2, then please check the following:
- is the temperature displayed in r0035 plausible?
- is an KTY84 temperature sensor being used? (others are not supported).

A0520 Rectifier overtemperature

Cause
- alarm threshold of the rectifier heatsink exceeded.

Diagnosis & Remedy

Please check the following:
- is the ambient temperature within the permissible range ?
- are the load and load duty cycle within the permissible range ?
- does the fan operate if the inverter is operational ?

A0521 Ambient temperature too high

Cause
- alarm threshold of the permissible ambient temperature exceeded.

Diagnosis & Remedy

Please check the following:
- is the ambient temperature within the permissible range ?
- does the fan operate if the inverter is operational ?
- is the air feed to the fan obstructed ?

A0522 Read I2C, time exceeded

Cause
- cyclic access to UCE values and power module data via i2c bus (only for sizes FX and GX) is faulted.

A0523 Output fault

Cause
- an output cable is not connected.

Diagnosis & Remedy
- alarm can be suppressed.

A0535 Brake resistor hot

Cause
- the load duty cycle of the braking resistor has been exceeded.
- when the load duty cycle is exceeded, then it is automatically limited to the value P1237.

Diagnosis & Remedy
- use a braking resistor with higher power rating / higher load duty cycle.

A0541 Motor data identification routine active

Cause
- motor data identification routine (P1910) selected and is active

A0542 Speed controller optimization running

Cause
- speed controller optimization (P1960) is selected and is presently active.

A0590 Alarm, no signals from the speed encoder

Cause
- no speed encoder signals
- inverter has changed-over to encoderless vector control.

Diagnosis & Remedy

Stop the inverter, and
- check the speed encoder, if an encoder is not being used, set P0400 to 0 and select the sensorless closed-loop vector control mode (P1300 = 20 or 22)
- check the encoder connections
- check whether the encoder is operating correctly (set P1300 = 0 and operate the drive at a fixed speed and check the encoder signal in r0061
- increase the permissible speed deviation in P0492

A0600 RTOS data loss alarm

Cause
- time slice overflow was identified

Diagnosis & Remedy
- use lower baud rate for USS
- de-activate inverter functions

A0700 CB alarm 1

Cause
- CB-(communications module)-specific

Diagnosis & Remedy
- refer to the CB User Manual

A0701 CB alarm 2

Cause
- CB-(communications module)-specific

Diagnosis & Remedy
- refer to the CB User Manual

A0702 CB alarm 3

Cause
- CB-(communications module)-specific

Diagnosis & Remedy
- refer to the CB User Manual

A0703 CB alarm 4

Cause
- CB-(communications module)-specific

Diagnosis & Remedy
- refer to the CB User Manual

A0704 CB alarm 5

Cause
- CB-(communications module)-specific

Diagnosis & Remedy
- refer to the CB User Manual

A0705 CB alarm 6

Cause
- CB-(Communications module)-specific

Diagnosis & Remedy
- refer to the CB User Manual

A0706 CB alarm 7

Cause
- CB-(Communications module)-specific

Diagnosis & Remedy
- refer to the CB User Manual

A0707 CB alarm 8

Cause
- CB-(Communications module)-specific

Diagnosis & Remedy
- refer to the CB User Manual

A0708 CB alarm 9

Cause
- CB-(Communications module)-specific

Diagnosis & Remedy
- refer to the CB User Manual

A0709 CB alarm 10

Cause
- CB-(Communications module)-specific

Diagnosis & Remedy
- refer to the CB User Manual

A0710 CB communications error

Cause
- loss of communications with the CB (communications module)

Diagnosis & Remedy
- check the CB hardware

A0711 CB communications error

Cause
- CB (communications module) signals a communications error.

Diagnosis & Remedy
- check the CB parameters

A0910 Vdc-max controller disabled/switched-out

Cause
- Vdc max controller was de-activated, as it was not able to keep the DC link voltage (r0026) within the limit values (refer to r0026 and P1240).

This occurs,
- if the line supply voltage is permanently too high.
- if the motor is driven by an active load, which means that the motor goes into regenerative operation.
- while decelerating (short down-ramps P1121) for extremely high load torques

Diagnosis & Remedy

Please check the following:
- is the input voltage (P0756) within the permissible range ?
- are load duty cycle and load limits within the permissible limits ?

A0911 Vdc-max controller active

Cause
- Vdc max controller is active
- the ramp-down times are automatically increased in order to keep the DC link voltage (r0026) within the limit values (refer to r0026 and P1240).

A0912 Vdc-min controller active

Cause
- Vdc min controller is activated, if the DC link voltage (r0026) falls below the minimum value (refer to r0026 or P1240).
- the kinetic energy of the motor is used to buffer the DC link voltage and therefore to slow down the drive.
- therefore brief line failures no longer automatically result in an undervoltage trip.

A0920 ADC parameters not correctly set

Cause

ADC parameters should not be set to identical values, as this would lead to illogical results.
- Index 0: Parameter settings for output identical.
- Index 1: Parameter settings for input identical.
- Index 2: Parameter settings for input do not correspond to ADC type.

A0921 DAC parameters not set properly

Cause

- DAC parameters (P0777 and P0779) have identical values.

OR
- DAC parameters (P0778 and P0780) have identical values.

Identical values would produce illogical results.

Diagnosis & Remedy

Check the following:
- Output parameter settings. Ensure P0777 and P0779 are not identical.
- Input parameter settings. Ensure P0778 and P0780 are not identical.

A0922 No load at the inverter

Cause

- no load is connected to the inverter.
- therefore several functions can run differently than under normal load conditions.

A0923 JOG counter-clockwise as well as JOG clockwise are requested

Cause

- both JOG clockwise and JOG counter-clockwise (P1055/P1056) have been requested. This is the reason that the RFG output frequency has been frozen to the actual value.

A0952 Load fault detected

Cause

- load conditions at the motor indicate a load fault or mechanical fault.

Diagnosis & Remedy

Please check the following:
- no braking, failure or destruction of the mechanical transmission line
- if required, lubricate the mechanical transmission line.

If you are using an external encoder, please check the following parameter settings:
- P2192 (delay time, load torque monitoring)

If you are using a specific speed range, then please check the following:
- P2182 (load torque monitoring F1)
- P2183 (load torque monitoring F1f2)
- P2184 (load torque monitoring F1f3)
- P2185 (upper torque threshold 1)
- P2186 (lower torque threshold 1)
- P2187 (upper torque threshold 2)
- P2188 (lower torque threshold 2)
- P2189 (upper torque threshold 3)
- P2190 (lower torque threshold 3)
- P2192 (delay time, load torque monitoring)

A0936 PID auto tuning active

Cause

- PID auto tuning (P2350) is selected or is presently running.

Diagnosis & Remedy

- after automatic PID optimization has been completed, the alarm is reset.

6 Abbreviations

AC	Alternating current
AD	Analog digital converter
ADC	Analog digital converter
ADR	Address
AFM	Additional frequency modification
AG	Automation unit
AIN	Analog input
AOP	Advanced operator panel
AOUT	Analog output
ASIC	Application-specific integrated circuit
ASP	Analog setpoint
ASVM	Asymmetric space vector modulation
BCC	Block check character
BCD	Binary-coded decimal code
BI	Binector input
BICO	Binector / connector
BO	Binector output
BOP	Basic operator panel
C	Commissioning
CB	Communication board
CCW	Counter-clockwise
CDS	Command data set
CI	Connector input
CM	Configuration management
CMD	Commando
CMM	Combimaster
CO	Connector output
CO/BO	Connector output / Binector output
COM	Common (terminal that is connected to NO or NC)
COM-Link	Communication link
CT	Commissining, ready to run
CT	Constant torque
CUT	Commissining, run, ready to run
CW	Clockwise
DA	Digital analog converter
DAC	Digital analog converter
DC	Direct current
DDS	Drive data set
DIN	Digital input
DIP	DIP switch
DOUT	Digital output
DS	Drive state
EEC	European Economic Community
EEPROM	Electrical erasable programmable read-only memory
ELCB	Earth leakage circuit breaker

EMC	Electro-magnetic compatibility
EMF	Electromotive force
EMI	Electro-magnetic interference
ESB	Equivalent circuit
FAQ	Frequently asked questions
FB	Function block
FCC	Flux current control
FCL	Fast current limit
FF	Fixed freqeuncy
FFB	Free function block
FOC	Field orientated control
FSA	Frame size A
GSG	Getting started guide
GUI ID	Global unique identifier
HIW	Main actual value
HSW	Main setpoint
HTL	High-threshold logic
I/O	Input and output
IBN	Commissioning
IGBT	Insulated gate bipolar transistor
IND	Sub-index
JOG	Jog
KIB	Kinetic buffering
LCD	Liguid crystal display
LED	Light emitting diode
LGE	Length
MHB	Motor holding brake
MM4	MICROMASTER 4th. Generation
MOP	Motor potentiometer
NC	Normally closed
NO	Normally open
NPN	Negative positive negative
OPI	Operating instructions
PDS	Power drive system
PID	PID controller (proportional, integral, derivative)
PKE	Parameter ID
PKW	Parameter ID value
PLC	Programmable logic controller
PLI	Parameter list
PNP	Positive negative positive
POT	Potentiometer
PPO	Parameter process data object
PTC	Positive temperature coefficient
PWE	Parameter value
PWM	Pulse-width modulation
PX	Power extension
PZD	Process data
QC	Quick commissioning
RAM	Random-access memory

RCCB	Residual current circuit breaker
RCD	Residual current device
RFG	Ramp function generator
RFI	Radio-frequency interference
RPM	Revolutions per minute
SCL	Scaling
SDP	Status display panel
SLVC	Sensorless vector control
STW	Control word
STX	Start of text
SVM	Space vector modulation
TTL	Transistor-transistor logic
USS	Universal serial interface
VC	Vector control
Vdc	DC-link voltage
VT	Variable torque
ZSW	Status word
ZUSW	Additional setpoint

Suggestions and/or Corrections

To Siemens AG Automation & Drives Group SD SPA PM 4 P.O. Box 3269 D-91050 Erlangen Federal Republic of Germany Email: documentation.sd@siemens.com	**Suggestions** **Corrections** For Publication/Manual: MICROMASTER 440 Parameter List User Documentation
From Name: Company/Service Department Address: _____ _____ Phone: _____ / _____ Fax: _____ / _____	Order number: 6SE6400-5BB00-0BP0 Date of Issue: 01/06 Should you come across any printing errors when reading this publication, please notify us on this sheet. Suggestions for improvement are also welcome.

Siemens AG
Automation and Drives Group (A&D)
Standard Drives (SD) Division
Postfach 3269, D-91050 Erlangen
Federal Republic of Germany

© Siemens AG, 2001, 2002, 2003, 2004, 2005
Subject to change without prior notice

Siemens Aktiengesellschaft

Order No.: 6SE6400-5BB00-0BP0

Excellence in Automation & Drives: Siemens

APPENDIX 13 Watlow – Immersion Heaters

(Left blank intentionally)

PRINT DISTRIBUTION

REVISIONS			
REV.	DESCRIPTION	DATE	APPROVED

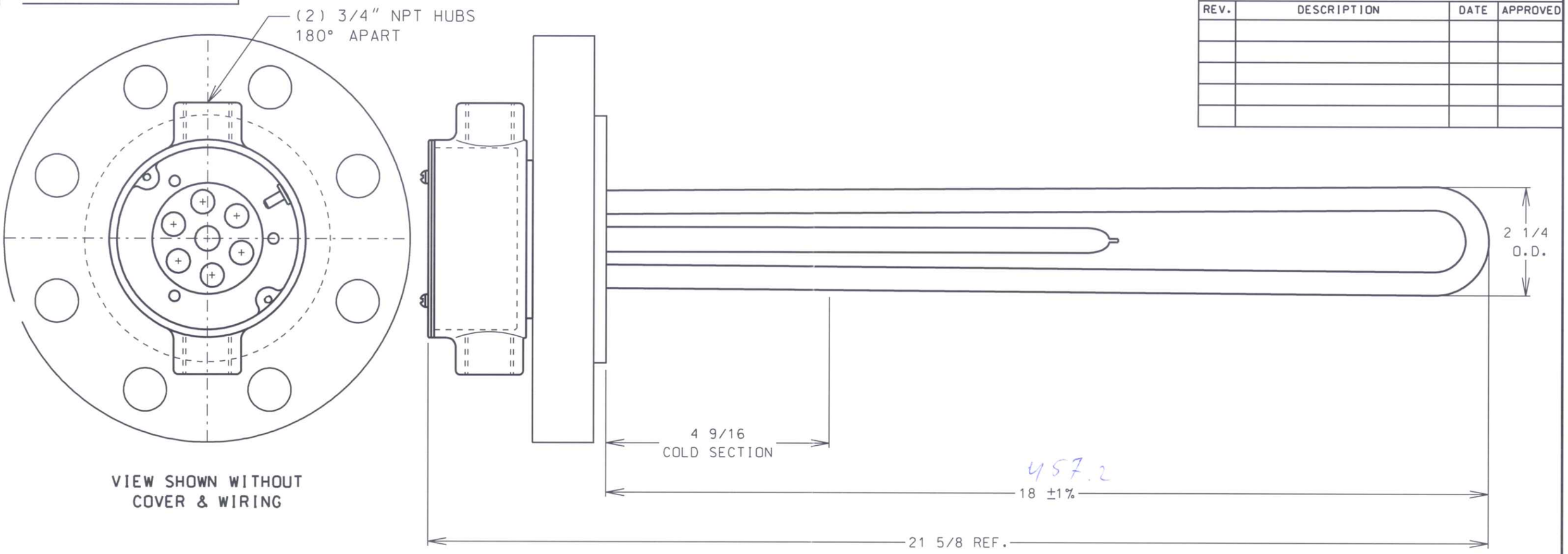

VIEW SHOWN WITHOUT
COVER & WIRING

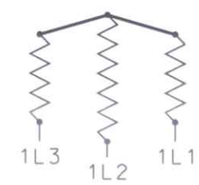

(1) 3PH WYE CIRCUIT

WIRING SCHEMATIC

SPECIFICATIONS:

CUSTOMER PURCHASE ORDER NUMBER: 1177-DIVEX-25/01/2007
WATLOW PART NUMBER: 7-18-1430-1

1.) RATING: 400 / 440 VOLTS, 4959 / 6000 WATTS, 3PH WYE
2.) HEATER FLANGE: 3" CLASS 600 ANSI B16.5 SA-182 F304 (304 S/S) RAISED FACE BLIND.
3.) ELEMENTS: (3) 0.475 INCH DIAMETER ALLOY 800 TUBULAR HEATING ELEMENTS.
4.) TERMINAL ENCLOSURE: NEMA TYPE 4 (IP64) WITH (2) 3/4" NPT HUBS & CE MARK.
5.) WIRING: (1) CIRCUIT, 3PH WYE. LINE CONNECTIONS MADE TO #10-32 THREADED STUDS WITH RING TYPE CONNECTORS.
6.) NOMINAL WATT DENSITY: 49.2 WATTS / SQ. IN.
7.) PRESSURE TEST: 150 PSIG HYDROSTATIC.
8.) PAINT: HOUSING PAINTED WITH A BLUE / GRAY RUST INHIBITING PRIMER.

NOTE: DO NOT SCALE DRAWING

UNLESS OTHERWISE SPECIFIED DIMENSIONS ARE IN INCHES
TOLERANCES:
.X = ± 0.1
.XX = ± 0.06
.XXX = ± 0.031
.XXXX = ± 0.0050
ANGLES = ± 2
FRACTIONS = ± 1/8

DRAWN	DATE
MEQ	02-08-07
CHECKED	DATE
ENGRG	DATE
O.A.	DATE

WATLOW ELECTRIC MANUFACTURING COMPANY CLAIMS PROPRIETARY RIGHTS IN THE MATERIAL HEREIN DISCLOSED. IT IS SUPPLIED IN CONFIDENCE, WITHOUT PREJUDICE TO ANY PATENT RIGHTS OF WATLOW, AND MAY NOT BE REPRODUCED OR USED TO MANUFACTURE ANYTHING SHOWN THEREIN WITHOUT WATLOW'S WRITTEN PERMISSION

CUSTOMER: ONLINE ANALYTICS

CAD NO.

MAT'L: COMPOSITE

WATLOW - HANNIBAL
(AN OPERATING UNIT OF WATLOW MISSOURI)
#6 INDUSTRIAL LOOP ROAD, HANNIBAL MO 63401
PHONE 573-221-2816, FAX 573-221-3723

TITLE: CUSTOMER DWG- NOT FOR PRODUCTION USE
3" CLASS 600 FLANGE HEATER, 304 S/S FLANGE,
(3) ELEMENTS, NEMA 4 HOUSING, T'WELL,
CE MARK

SIZE	CAGE CODE	DWG NO	REV
B		7-18-1430-1	

SCALE	PART NO	SHEET	OF
NTS		1	1

65 Bar

APPENDIX 14 Wika – Pressure Gauge, Pressure Sensor & Resistance Thermometer

14.1 Pressure Gauges

14.2 Model S-10 Pressure Sensor

14.3 TR7X0 Series PT100 Resistance Thermometer

(Left blank intentionally)

Bourdon Tube Pressure Gauge
Model 213.53, with Liquid Filling and Stainless Steel Case

Applications

- Intended for adverse service conditions where pulsating or vibration exists
- Suitable for all gaseous and liquid media that will not obstruct the pressure system or attack copper alloy parts
- Hydraulics
- Compressors
- Shipbuilding industry

Special Features

- Vibration and shock resistant
- Especially sturdy design
- NS 63, 100 approved by German Lloyd and Gosstandart
- Scale ranges up to 0 ... 1000 bar

Bourdon Tube Pressure Gauge Model 213.53, radial connection

Description

Design
EN 837-1

Nominal size
40, 50, 63 and 100 mm

Accuracy class
NS 40: 2.5
NS 50, 63: 1.6
NS 100: 1.0

Scale range
NS 40, 50: 0 ... 1 up to 0 ... 600 bar
NS 63, 100: 0 ... 0.6 up to 0 ... 1000 bar
or other equivalent units of pressure or vacuum

Working pressure

NS 40, 50, 63:	Steady:	¾ of scale range
	Fluctuating:	⅔ of scale range
	Short time:	full scale range
NS 100:	Steady:	full scale range
	Fluctuating:	0.9 x full scale range
	Short time:	1.3 x full scale range

Operating Temperature
Ambient:
NS 40, 50, 63: 0 ... +60 °C
NS 100: -20 ... +60 °C
Medium: +60 °C maximum

Temperature effect
When temperature of the pressure element deviates from reference temperature (+20 °C):
max. ±0.4 %/10 K of the span

Ingress protection
IP 65 (EN 60 529 / IEC 529)

Part of your business

Pressure connection
Material: Cu-alloy
Lower mount (LM), centre back mount (CBM) or lower back mount (LBM)
NS 40: G ⅛ B, 14 mm flats
NS 50, 63: G ¼ B, 14 mm flats
NS 100: G ½ B, 22 mm flats

Pressure element
NS 40, 50, 63:
< 60 bar: Cu-alloy, C-type, soft soldered
≥ 60 bar: Cu-alloy, helical type, soft soldered
NS 100:
< 100 bar: Cu-alloy, C-type, soft soldered
≥ 100 bar: stainless steel 316L, helical type, brazed

Movement
Cu-alloy

Dial
NS 40, 50, 63: white plastic, with pointer stop pin
NS 100: white aluminium
with black lettering

Pointer
NS 40, 50, 63: black plastic
NS 100: black aluminium

Window
Clear plastic

Case
Natural finish stainless steel, with pressure relief in case top
O-Ring seal between case and entry stem
Ranges ≤ 0 ... 16 bar with case venting provision

Bezel ring
Triangular bezel, roll formed, glossy finish stainless steel

Liquid filling
Glycerine 99,7 %

Optional extras

- NS 50, 63: stainless steel pressure system (model 233.53)
- NS 100: zero point adjustment in front
- Medium temperature to 100 °C with special soft solder
- Ambient temperature -40 ... +60 °C: silicon oil filling
- 3-hole panel mounting flange, stainless steel, back entry only (not NS 40)
- 3-hole surface mounting flange, stainless steel (not NS 40)
- With clamp (back entry only)

Dimensions in mm

Radial bottom pressure entry (LM)

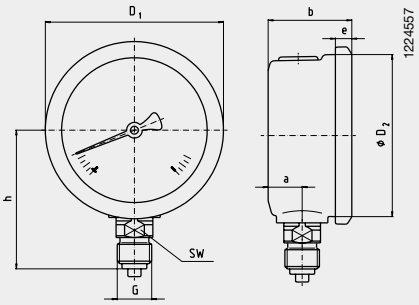

40, 50, 63, centre back pressure entry (CBM)

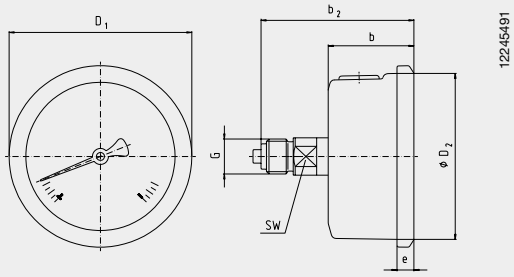

100 mm, lower back pressure entry (LBM)

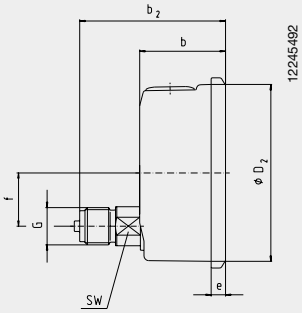

NS	a	b_1 ± 0,5	b_2 ± 1	D_1	D_2	e	f	G	h ± 1	SW	Weight in kg
40	9.5	30	50	46.5	40	6	-	G ⅛ B	40	14	0.10
50	12	30	55	55	50	5.5	-	G ¼ B	48	14	0.15
63	13	32	56	68	62	6.5	-	G ¼ B	54	14	0.21
100	15.5	48	81.5	107	100	8	30	G ½ B	87	22	0.80

Standard pressure entry with parallel thread and sealing to EN 837-1 / 7.3

Ordering information
Pressure gauge model / Nominal size / Scale range / Size of connection / Optional extras required

Specifications and dimensions given in this leaflet represent the state of engineering at the time of printing.
Modifications may take place and materials specified may be replaced by others without prior notice.

9039538 07/2006 GB

WIKA Alexander Wiegand GmbH & Co. KG
Alexander-Wiegand-Straße 30
63911 Klingenberg/Germany
Phone (+49) 93 72/132-0
Fax (+49) 93 72/132-406
E-Mail info@wika.de
www.wika.de

Pressure transmitter for general applications
Model S-10, standard version
Model S-11, flush diaphragm

Applications

- Mechanical engineering
- Hydraulics / Pneumatics
- General industrial applications
- Food & Beverageel

Special Features

- Pressure ranges from 0 ... 0.1 bar to 0 ... 1000 bar
- Various industrial standard signal outputs
- Wiring with connector or flying leads
- Stock program for short delivery times
- Vacuum tight

Fig. left Pressure transmitter S-10
Fig. center Pressure transmitter S-11
Fig. right Pressure transmitter S-11 with cooling element

Description

This series of pressure transmitters has been carefully designed to cover the majority of industrial applications with instruments readily available from stock.
Compact design and robust construction make these instruments suitable for all applications in machine construction, process control, laboratory or quality and materials testing equipment.

There is an extraordinary range of instrument variants resulting from the fact that various mechanical and electrical connections can be combined with each other to almost any extent.

Structure
All wetted parts are made of stainless steel and are hermetically welded. Therefore there is no need for additional sealing material, which could possibly react with the pressure medium. The compact case is also made of stainless steel and provides IP 65 ingress protection (special versions up to IP 68).

The transmitters can be supplied with a non-stabilized direct voltage of 10 (14) … 30 V and provide standard industrial output signals.

The model S-11 with flush diaphragm is particularly suitable for the measurement of viscous fluids or media containing particulates that may clog the pressure connection of standard industrial transmitters. Thus, a trouble-free pressure measurement is ensured. Pressure transmitters with flush diaphragm are available in pressure ranges from 0 ... 0.1 bar to 0 ... 600 bar. For applications with higher temperature requirements an integrated cooling element enables medium temperatures of up to 150 °C (302 °F).

For the pressure ranges from 0 … 0.25 bar up to 0 ... 1000 bar the pressure transmitters can be delivered for oxygen applications (technical safety check of the BAM, Bundesanstalt für Materialforschung und -prüfung available).

Data Sheets for related models:
Pressure transmitter Intrinsic safe; model IS-2X; see data sheet PE 81.50
Pressure transmitter for low pressure applications; model SL-1; see data sheet PE 81.36
Pressure Transmitter for highest pressure applications; model HP-1; see data sheet PE 81.29

Part of your business

Specifications	Model S-10 / S-11											
Pressure ranges *)	bar	0.1	0.16	0.25	0.4	0.6	1	1.6	2.5	4	6	10
Over pressure safety	bar	1	1.5	2	2	4	5	10	10	17	35	35
Burst pressure	bar	2	2	2.4	2.4	4.8	6	12	12	20.5	42	42
Pressure ranges *)	bar	16	25	40	60	100	160	250	400	600	1000 1)	
Over pressure safety	bar	80	50	80	120	200	320	500	800	1200	1500	
Burst pressure	bar	96	96	400	550	800	1000	1200	1700 2)	2400 2)	3000	
	{Vacuum, gauge pressure, compound range, absolute pressure, other pressure ranges and units are available}											
	1) Only model S-10.											
	2) For model S-11: the value specified in the table applies only when sealing is realised with the sealing ring underneath the hex. Otherwise max. 1500 bar applies											
Materials		(other materials see WIKA diaphragm seal program)										
■ Wetted parts												
» Model S-10 *)		Stainless steel										
» Model S-11		Stainless steel O-ring: NBR 3) {FPM/FKM}										
■ Case		Stainless steel										
■ Internal transmission fluid 4)		Synthetic oil {Halocarbon oil for oxygen applications}										
		3) O-ring made of FPM/FKM for Model S-11 with integrated cooling element.										
		4) Not for S-10 with pressure ranges > 25 bar.										
Power supply UB	UB in VDC	10 < UB ≤ 30 (14 ... 30 with signal output 0 ... 10 V)										
Signal output and	R_A in Ohm	4 ... 20 mA, 2-wire R_A ≤ (UB – 10 V) / 0.02 A										
maximum ohmic load R_A		0 ... 20 mA, 3-wire R_A ≤ (UB – 3 V) / 0.02 A										
		0 ... 5 V, 3-wire R_A > 5 k										
		0 ... 10 V, 3-wire R_A > 10 k										
		{other signal outputs on request}										
Adjustability zero/span	%	± 5 using potentiometers inside the instrument										
Response time (10 ... 90 %)	ms	≤ 1 (≤ 10 ms at medium temperatures below < -30 °C for pressure ranges up to 25 bar or with flush diaphragm)										
Dielectric strength	VDC	500 5)										
	5) NEC Class 02 power supply (low voltage and low current max. 100 VA even under fault conditions)											
Accuracy	% of span	≤ 0.25 {0.125} 6) (BFSL)										
	% of span	≤ 0.5 {0.25} 6) 7)										
	6) Accuracy { } for pressure ranges ≥ 0,25 bar											
	7) Including non-linearity, hysteresis, zero point and full scale error (corresponds to error of measurement per IEC 61298-2)											
	Adjusted in vertical mounting position with lower pressure connection											
Non-linearity	% of span	≤ 0.2 (BFSL) according to IEC 61298-2										
Non-repeatability	% of span	≤ 0.1										
1-year stability	% of span	≤ 0.2 (at reference conditions)										
Permissible temperature of												
■ Medium 8) *)		-30 ... +100 °C {-40 ... +125 °C}						-22 ... +212 °F {-40 ... +257 °F}				
»S-11 with cooling element		-20 ... +150 °C						-4 ... +302 °F				
■ Ambience 8)		-20 ... +80 °C						-4 ... +176 °F				
»S-11 with cooling element		-20 ... +80 °C						-4 ... +176 °F				
■ Storage 8)		-40 ... +100 °C						-40 ... +212 °F				
»S-11 with cooling element		-20 ... +100 °C						-4 ... +212°F				
	8) Also complies with EN 50178, Tab. 7, Operation (C) 4K4H, Storage (D) 1K4, Transport (E) 2K3											
Compensated temp. range		0 ... +80 °C						32 ... +176 °F				
Temperature coefficients within compensated temp range												
■ Mean TC of zero	% of span	≤ 0.2 / 10 K (< 0.4 for pressure range ≤ 0.25 bar)										
■ Mean TC of range	% of span	≤ 0.2 / 10 K										
CE-conformitiy												
■ Pressure equipment directive		97/23/EC										
■ EMC directive		89/336/EEC emission (class B) and immunity according to EN 61 326										
Shock resistance	g	1000 according to IEC 60068-2-27 (mechanical shock)										
Vibration resistance	g	20 according to IEC 60068-2-6 (vibration under resonance)										

Specifications		Model S-10 / S-11
Wiring protection	VDC	
■ Overvoltage protection		36
■ Short-circuit proofness		Sig+ towards UB-
■ Reverse polarity protection		UB+ towards UB-
Weight	kg	Approx. 0.2
		Approx. 0.3 with option accuracy 0.25% of span due to longer case

*) In an oxygen version model S-11 is not available. In an oxygen version model S-10 is only available in gauge pressure ranges ≥ 0.25 bar with media temperatures between -20 … +60 °C / -4 … +140 °F and using stainless steel or Elgiloy® wetted parts.
{ } Items in curved brackets are optional extras for additional price

Dimensions in mm

Ingress Protection IP per IEC 60529. The ingress protection classes specified only apply while the pressure transmitter is connected with female connectors that provide the corresponding ingress protection.

Electrical connections

DIN 175301-803 A
L-connector
for conductor cross section up to max. 1.5 mm ², conductor outer diameter 6-8 mm
IP 65
Order code: A4

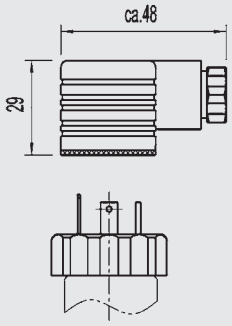

M 12x1
Circular connector
4-pin
IP 67
Order code: M4
*)

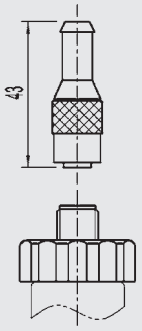

Flying leads
for conductor cross section 0.5 mm ², AWG 20 with end splices, conductor outer diameter 6.8 mm,
IP 67
Order code: DL

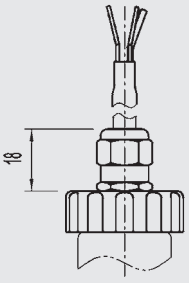

Flying leads
zero/span not adjustable,
for conductor cross section up to max. 0.5 mm ², AWG 20 with end splices, conductor outer diameter 6.8 mm,
IP 68
Order code: EM

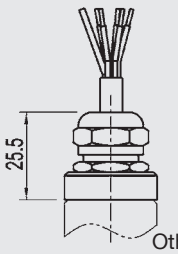

Others on request

Case

Case at 0.25 % accuracy

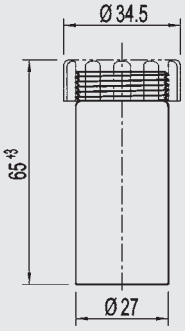

Case at 0.5 % accuracy

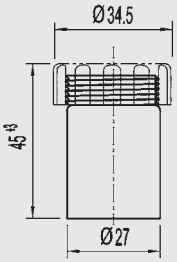

Case at
0.25 % accuracy

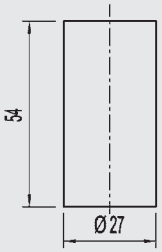

Case at
0.5 % accuracy

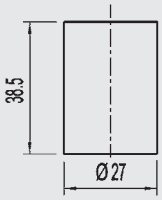

Pressure connections S-10

G 1/2
EN 837
Order code: GD

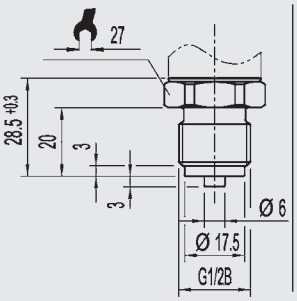

G 1/4
EN 837
Order code: GB

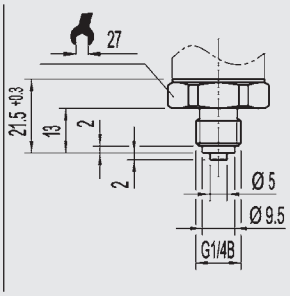

G 1/4
DIN 3852-E
(over pressure safety max. 600 bar)
Order code: HD

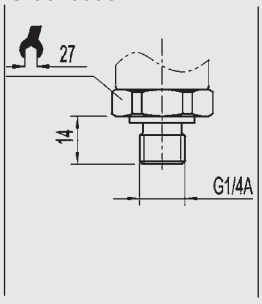

1/ 2 NPT
per „Nominal size for US standard tapered pipe thread NPT“
Order code: ND

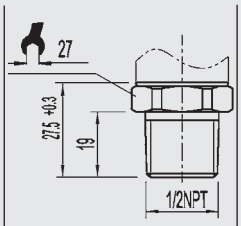

1/4 NPT
per „Nominal size for US standard tapered pipe thread NPT“
Order code: NB

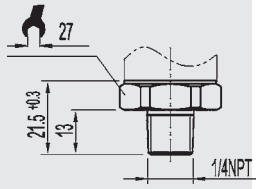

Others on request

For installation and safety instructions see the operating instructions for this product.
For tapped holes and welding sockets please see Technical Information IN 00.14 for download at www.wika.de -Service

*) Connectors are not included in delivery.

Dimensions in mm

Pressure connections S-11, flush diaphragm

G 1/2 B
with or without cooling element
0 ... 2.5 up to 0 ... 600 bar
Order code: 86

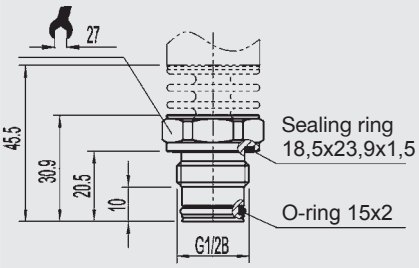

G 1B
with or without cooling element
0 ... 0.1 up to 0 ... 1.6 bar
Order code: 85

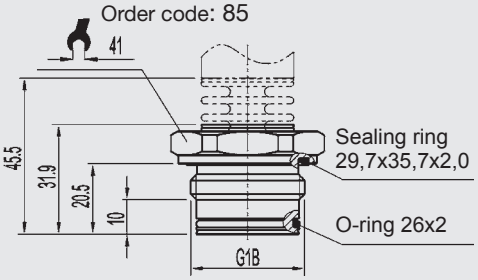

G 1B
acc. EHEDG **)
with cooling element , up to 150 °C
up to 25 bar
Order code: 84

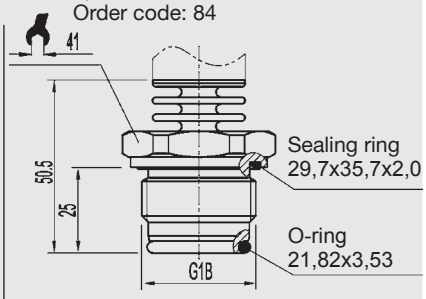

Others on request

For installation and safety instructions see the operating instructions for this product.
For tapped holes and welding sockets please see Technical Information IN 00.14 for download at www.wika.de -Service

**) European Hygienic Equipment Design Group

Wiring details

	2-wire	3-wire
DIN 175301-803 A L-Connector	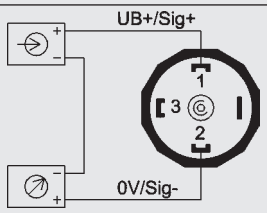	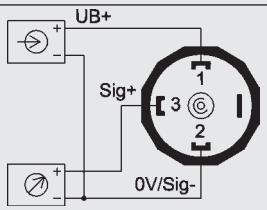
M 12x1, 4-pin Circular connector	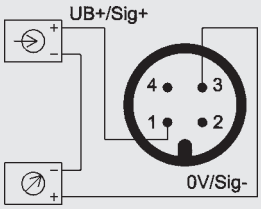	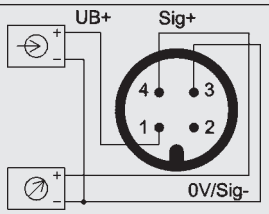
Flying leads with 1.5 m of cable	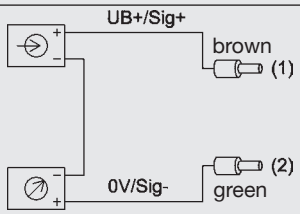	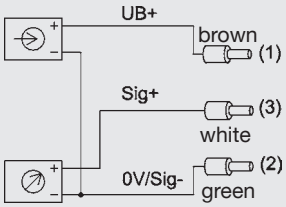

Legend:

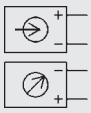

Order-No.

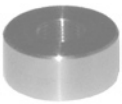

	S-11
11 92 299	G 1/2 Weld-on adaptor
11 92 264	G 1 Weld-on adaptor

Specifications and dimensions given in this leaflet represent the state of engineering at the time of printing.
Modifications may take place and materials specified may be replaced by others without prior notice.

WIKA Alexander Wiegand GmbH & Co. KG
Alexander-Wiegand-Straße 30
63911 Klingenberg/Germany
Phone +49 / (0) 9372/132-0
Fax +49 / (0) 9372/132-406
E-mail info@wika.de
www.wika.de

9029702 08/2007 GB

Resistance Thermometers
Model Series TR7X0, Sheathed Design

Applications

- Suitable for all industrial and laboratory applications

Special Features

- Application ranges from -200 °C to +600 °C
- Flexible stainless steel sheath, mineral insulated wire
- High mechanical strength, vibration proof
- Intrinsically safe versions (ATEX)

Sheathed Resistance Thermometers, Model Series TR7X0

Description

With sheathed resistance thermometers, the flexible part of the probe is a mineral insulated cable, often called the sheathed cable. This cable consists of a stainless steel outer sheath, in which the inner conductors are encased for insulation and compressed into a highly compacted ceramic mass.

The measuring resistance is connected to the inner conductors at the measuring end of the sheathed cable. Connector wires are connected to the other end of the sheathed cable, and the sheathed cable is hermetically sealed with a sealing compound. The connector wires form the basis of the electrical interface, with cable, a connector or a terminal block then attached to these connector wires.

Due to their flexibility and the small diameters in which they are available, sheathed resistance thermometers can be used in locations that are not easily accessible.

Intrinsically safe designs are also available for applications in hazardous areas. The models in the TR7X0 series are provided with a type-examination certificate for "intrinsically safe" protection according to directive 94/9/EC (ATEX). Manufacturer's Declarations in accordance with EN 50 020 are also available.

Optionally analogue or digital transmitters from the WIKA range can be fitted into the connection head of the TR750 or TR760.

Sheathed Thermocouples *Model TC7X0* *see data sheet TE 65.40*
Cable Resistance Thermometers *Model TR101* *see data sheet TE 60.05*
Cable Thermocouples *Model TC101* *see data sheet TE 65.05*

WIKA
Part of your business

Sensor

The sensor is located in the tip of the sheathed resistance thermometer.

Sensor method of connection
- 2 wire
- 3 wire
- 4 wire

With 2-wire connection the lead resistance of the measuring insert compounds the error.

Sensor limiting error
- class B to DIN EN 60 751
- class A to DIN EN 60 751 (-50 °C ... +450 °C)
- ⅓ DIN B at 0 °C

It makes no sense to combine 2-wire connection with class A or 2-wire connection with ⅓ DIN B, because the lead resistance error of the measuring insert over-rides the higher sensor accuracy.

Basic values and limiting errors
Basic values and limiting errors for the platinum measurement resistances are laid down in DIN EN 60 751.
The nominal value of Pt 100 sensors is 100 Ω at 0 °C. The temperature coefficient α can be stated simply to be between 0 °C and 100 °C with:

$$\alpha = 3.85 \cdot 10^{-3}\ °C^{-1}$$

The relationship between the temperature and the electrical resistance is characterised by polynomials which are defined in DIN EN 60 751. Furthermore, this standard lays down the basic values in °C stages.

Class	Limiting error in °C
A	0.15 + 0.002 • |t| [1]
B	0.3 + 0.005 • |t|

1) |t| is the value of the temperature in °C without consideration of the sign

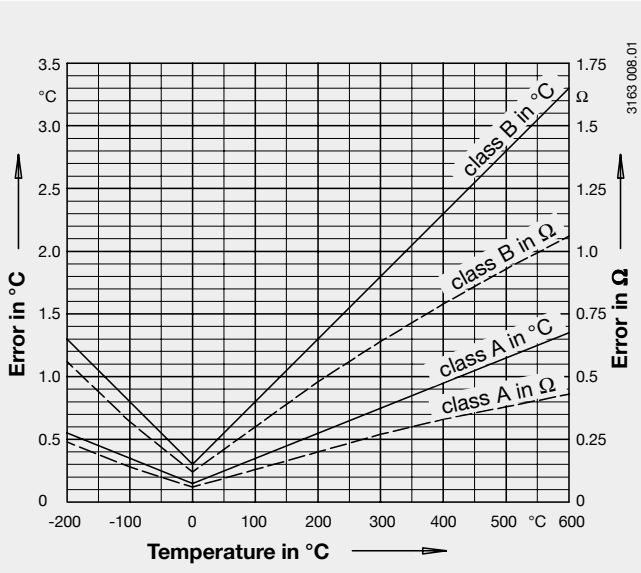

Temperature (ITS 90) °C	Basic value Ω	Limiting error DIN EN 60 751 Class A °C	Class A Ω	Class B °C	Class B Ω
-200	18.52	± 0.55	± 0.24	± 1.3	± 0.56
-100	60.26	± 0.35	± 0.14	± 0.8	± 0.32
-50	80.31	± 0.25	± 0.10	± 0.55	± 0.22
0	100	± 0.15	± 0.06	± 0.3	± 0.12
50	119.40	± 0.25	± 0.10	± 0.55	± 0.21
100	138.51	± 0.35	± 0.13	± 0.8	± 0.30
200	175.86	± 0.55	± 0.2	± 1.3	± 0.48
300	212.05	± 0.75	± 0.27	± 1.8	± 0.64
400	247.09	± 0.95	± 0.33	± 2.3	± 0.79
500	280.98	± 1.15	± 0.38	± 2.8	± 0.93
600	313.71	± 1.35	± 0.43	± 3.3	± 1.06

In addition to the limiting errors defined in DIN EN 60 751 historical data defines further limits, for example: ⅓ DIN B at 0 °C.
It should be noted that the limiting error restriction to ⅓ does not refer to the entire application range but only to the 0 °C value. If the restriction in limiting error refers to a temperature range, this range must be stated.

Designs

Depending on their type of electrical connection, sheathed resistance thermometers are subdivided into the following designs:
- Model TR720 with conductor wires
- Model TR730 with cable
- Model TR740 with connector
- Model TR750 with connection head
- Model TR760 with connection head and fixed process connection

Upon request custom designs for special requirements are also available.

Sheath

The sheath is flexible, with the exception of the probe tip, which is a 60 mm long rigid tube containing the measurement resistance. The admissible bending radius is three or five times the value of the sheath diameter. These sheathed probes can be subjected to up to approx. 600 °C.

Please note:
The flexibility of the sheathed resistance thermometer has to be taken into account, especially when the flow rates are relatively high. Versions in which the process connection is not located directly at the connection head - where a transmitter might be built-in - are to be considered critical in applications where vibratory stresses occur.

Sheath diameter
2.0 mm, 3.0 mm, 6.0 mm or 8.0 mm (with mounted tube), other on request

Sheath material
Stainless steel (other on request)

Nominal length
The nominal length should not be less than 150 mm. Shorter probes with cable are available in a rigid design, e.g.: model TR 101, see data sheet TE 60.05.

Product summary and dimensions in mm

TR720 with conductor wires

These models with conductor wires are intended for the installation into existing housings. The flexible sheath is inserted into the housing to the actual measuring point.

Lead length 100 mm, other length on request,
Cu braid 0.22 mm², PTFE insulated,
max. temperature at the conductor connection 180 °C (250 °C on request),
Number of conductor wires according to number of sensors and method of sensor connection, bare wire ends, other versions on request

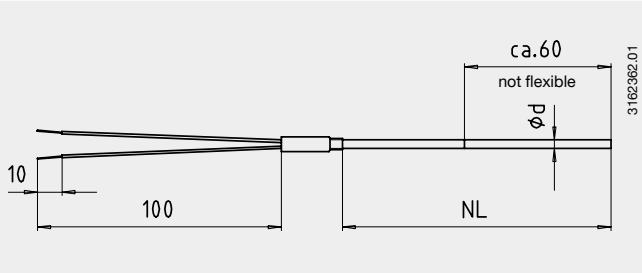

TR730 with cable

Cable and sheath are firmly connected to each other. Cable probes are easily replaceable and can be inserted or screwed into holes in machine parts without thermowells, for example. Usually these probes have no process connection as they are inserted into a hole.
Retention is by means of threads, union nuts etc. which are available from WIKA.

Cable length to customer specification
Cu braid 0.22 mm², number of cores according to number of sensors and method of sensor connection, bare wire ends, insulation (material / max. ambient temperature):

PVC	105 °C
Silicon	200 °C
PTFE	250 °C

other versions on request

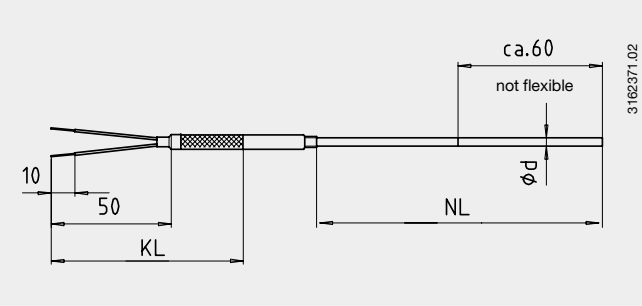

Optional: connector (male) fitted to cable end

- Lemosa size 1 S for cable diameters up to 5.5 mm
- Lemosa size 2 S for cable diameters up to 8 mm
- Binder connector

max. temperature at connector 85 °C,
mating connectors are available,
other versions on request

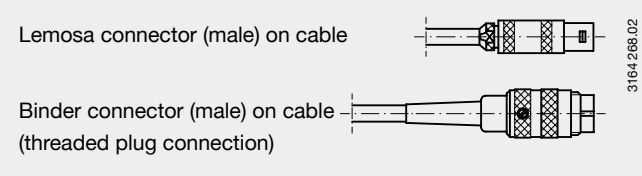

TR740 with connector (female) fitted on probe

Designs with connector are used in cases where the electrical connection to the probe has to be easily made and unmade via a plug.
Connector:

- Lemosa size 1 S for sheath diameters 2, 3 and 6 mm
- Lemosa size 2 S for sheath diameters 3 and 6 mm

max. temperature at connector 85 °C,
mating connectors are available,
other versions on request
Otherwise same as model TR730.

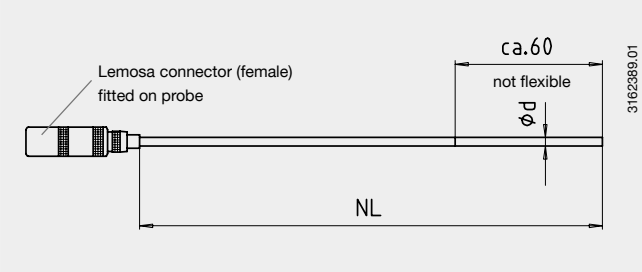

Legend:

NL Nominal length
KL Cable length
Ød Sheath diameter

TR750 with connection head

The electrical connection is provided by a connection head.
Connection head: Model JS, JVA or BS
Description of connection heads see page 6, top

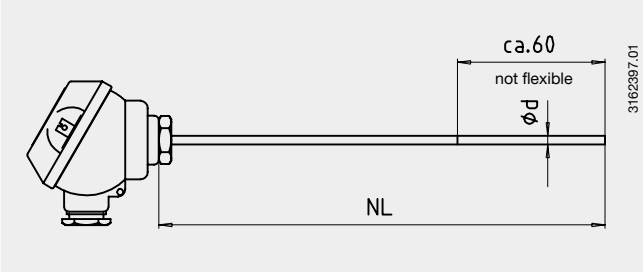

Process connections of Models TR720, TR730, TR740 and TR750

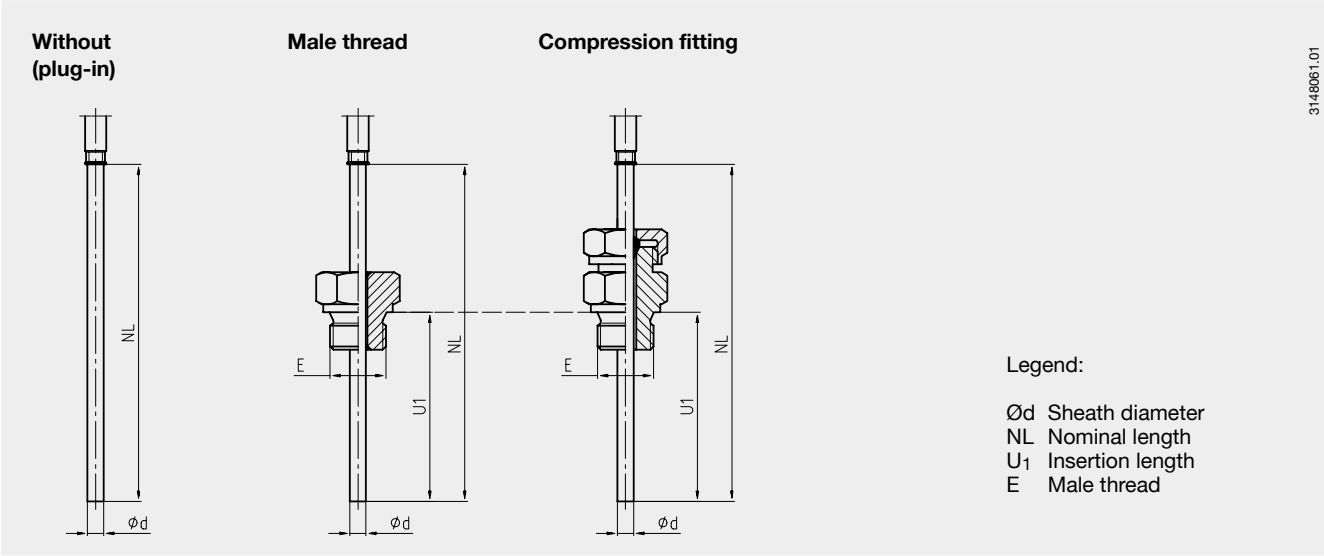

Male thread
Firmly connected to the sheath
Insertion length U_1: to customer specification
Max. insertion length: nominal length minus approx. 20 mm (Model TR750: nominal length minus approx. 25 mm)
Material: stainless steel, other on request

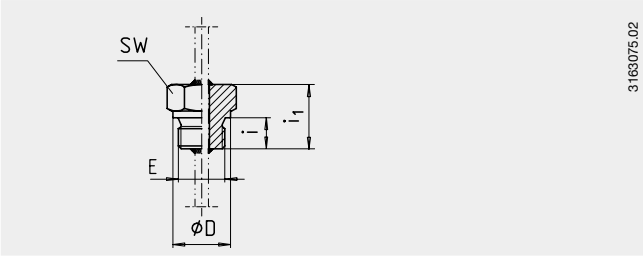

Compression fitting
Allows simple adaptation to the required insertion length at the installation point
Max. insertion length: nominal length minus approx. 25 mm (Model TR750: nominal length minus approx. 30 mm)
Material: stainless steel
Sealing ring material: stainless steel or PTFE

Sealing rings of stainless steel can be adjusted once, after unscrewing, sliding along the sheath is no longer possible.
- Max. temperature at process connection 500 °C

Sealing rings of PTFE can be adjusted several times, after unscrewing, repeated sliding along the sheath is still possible.
- Max. temperature at process connection 150 °C

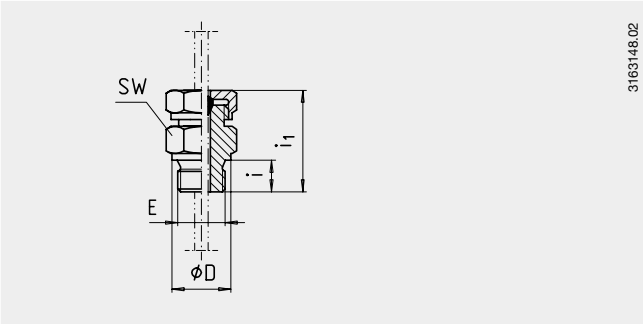

For sheathed resistance thermometers with Ø 2 mm only PTFE sealing rings are permissible.

Dimensions of process connections Model TR720, TR730, TR740 and TR750

Process connection	Male thread E	Sheath in mm Ød	Dimensions in mm i	i_1	ØD	SW (flats)
Male thread	G ½ B	2, 3 or 6	14	29	26	27
	G ¼ B	2, 3 or 6	12	24	18	19
	M 8 x 1.0	2 or 3	8	14	12	12
Compression fitting	G ½ B	2, 3 or 6	14	34	26	27
	G ¼ B	2, 3 or 6	12	32	18	19
	M 8 x 1.0	2 or 3	8	27	12	12

TR760 with connection head and fixed process connection

This design is characterised by a fixed process connection (male thread) with a welded-in sheathed probe.
Therefore, in this case the insertion length is of importance in lieu of the nominal length for variable insertion dimensions. The male thread is usually positioned directly at the connection head.
Insertion length: to customer specification
Material: stainless steel,
other on request
Permissible ambient temperature at the connection head:
120 °C for designs without transmitter,
85 °C for designs with transmitter

Description of connection heads see page 6, top

Option
Built-in transmitter, see page 6

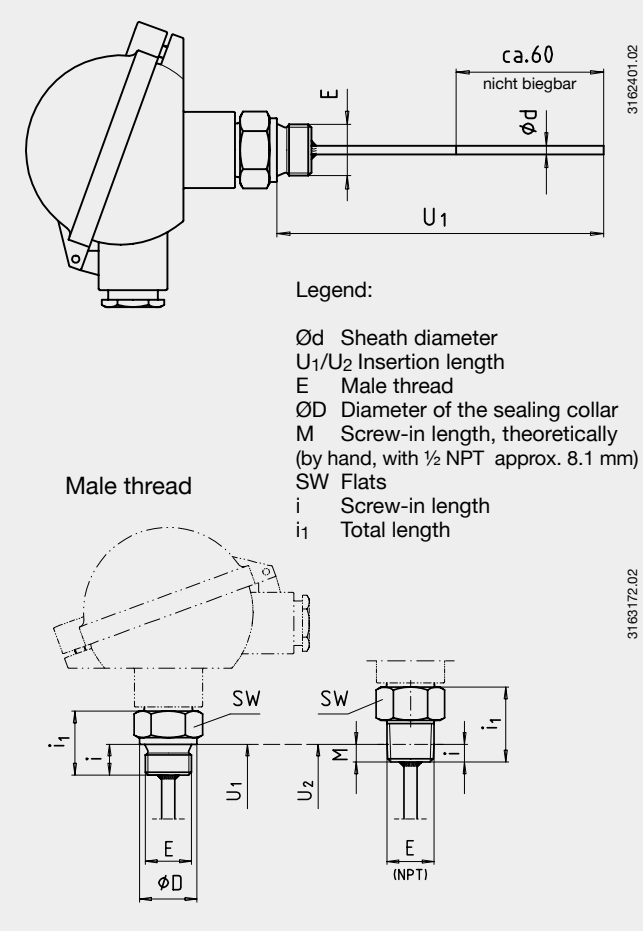

Dimensions of process connections Model TR760

Process connection	Male thread E	Sheath in mm Ød	Dimensions in mm i	i_1	ØD	SW (flats)
Male thread	G ¼ B	2, 3 or 6 (8)	12	24	18	19
	G ½ B	2, 3 or 6 (8)	14	29	26	27
	½ NPT	3 or 6 (8)	ca. 8.1	34	–	22
	M 20 x 1.5	3 or 6 (8)	14	29	25	27

Possible combinations of sheath diameter, number of sensors and sensor method of connection

Model	Sheath Ø in mm	Sensor / sensor method of connection 1 x Pt100 2 wire	3 wire	4 wire	Sensor / sensor method of connection 2 x Pt100 2 wire	3 wire	4 wire
TR720 ... TR750	2,0 1)	x	x	x	-	-	-
	3,0	x	x	x	x	x	-
	6,0	x	x	x	x	x	-
TR760	2,0	x	x	x	-	-	-
	3,0	x	x	x	x	x	-
	6,0	x	x	x	x	x	-
	8,0	x	x	x	x	x	x

1) Not with Model TR750

Connection head

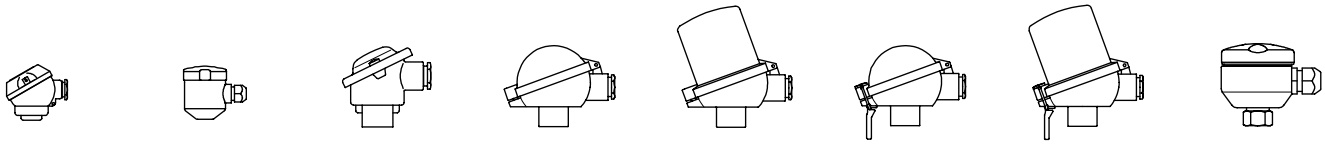

JS | JVA | BS | BSZ BSZ-K | BSZ-H BSZ-HK | BSS | BSS-H | BVA

Model	Material	Cable entry	Ingress protection	Cap	Surface finish
JS	aluminium	M16 x 1.5	IP65	cap with 2 screws	silver bronze, painted
JVA	stainless steel	M12 x 1.5 1)	IP65	screw cover	blank
BS	aluminium	M20 x 1.5	IP65	cap with 2 screws	silver bronze, painted
BSZ	aluminium	M20 x 1.5	IP65	flap cap with screw	silver bronze, painted
BSZ-K	plastic	M20 x 1.5	IP65	flap cap with screw	blank
BSZ-H	aluminium	M20 x 1.5	IP65	flap cap with screw	silver bronze, painted
BSZ-HK	plastic	M20 x 1.5	IP65	flap cap with screw	blank
BSS	aluminium	M20 x 1.5	IP65	flap cap with clip	silver bronze, painted
BSS-H	aluminium	M20 x 1.5	IP65	flap cap with clip	silver bronze, painted
BVA	stainless steel	M20 x 1.5 1)	IP65	screw cover	blank

1) Cable gland, metal

Connection head with digital indicator (option)

(only Model TR760)

As an optional alternative to the standard connection head the thermometer may be equipped with the digital indicator DIH10. The connection head used in this case is similar to the head model BSZ-H. For operation a 4 ... 20 mA transmitter is necessary, which is mounted to the measuring insert. The scale range of the indicator is configured to the same measuring range as the transmitter.
Intrinsically safe versions, explosion protection type EEx (i), are also available.

Fig. Connection head with digital indicator, Model DIH10

Transmitter (option)

(not possible with connection head Model JS and JVA)

With model TR750 and model TR760 a transmitter can be mounted directly into the connection head form B. Generally two mounting variants are possible:

- o mounted instead of terminal block
- ● mounted within the cap of the connection head
- – mounting not possible

Mounting of two transmitters on request.

Connection head	Transmitter T12	T19	T24	T32	T42	T5350
BS	–	o	o	–	–	o
BSZ / BSZ-K	o	o	o	o	o	o
BSZ-H / BSZ-HK	●	●	●	●	●	●
BSS	o	o	o	o	o	o
BSS-H	●	●	●	●	●	●
BVA	o	o	o	o	o	o

Model	Description	Explosion protection	Data sheet
T19	Analogue transmitter, configurable	without	TE 19.01
T24	Analogue transmitter, PC configurable	optional	TE 24.01
T12	Digital transmitter, PC configurable	optional	TE 12.01
T32	Digital transmitter, HART protocol	optional	TE 32.01
T42	Digital transmitter, PROFIBUS PA	optional	TE 42.01
T5350	Digital transmitter FOUNDATION Fieldbus and PROFIBUS PA	standard	TE 53.01

Explosion protection (option)

Resistance thermometers of the Model series TR7X0 are available with a type-examination certificate for "intrinsically safe" ignition protection (TÜV 02 ATEX 1793 X).
These thermometers comply with the requirements of directive 94/9/EC (ATEX), EEx-i, for gases and dust.
Manufacturer's Declarations in accordance with EN 50 020 are also available.

The classification / suitability of the instrument (permissible power $P_{max.}$, minimum neck length and permissible ambient temperature) for the respective category can be seen on the type-examination certificate and in the operating instructions.

The responsibility for using suitable thermowells rests with the user.
The permissible ambient temperature ranges of the built-in transmitters can be taken from the corresponding transmitter approval.

Note:
When mounting thermometers with flying leads, the mounting personnel must ensure that the connection is carried out properly and in compliance with the appropriate regulations.
When the flying leads of the thermometer are within the hazardous area, suitable adapters / connectors are to be used.

Flying leads are to be connected outside of the hazardous area or, when operated in explosive atmospheres caused by dust, within a case which is certified according to the 94/9/EC and EN 50 281-1-1 directives and provides an ingress protection of at least IP 65. A minimum air and creepage distance of 2 mm has to be ensured.

Electrical connection Models TR720, TR730 and TR740

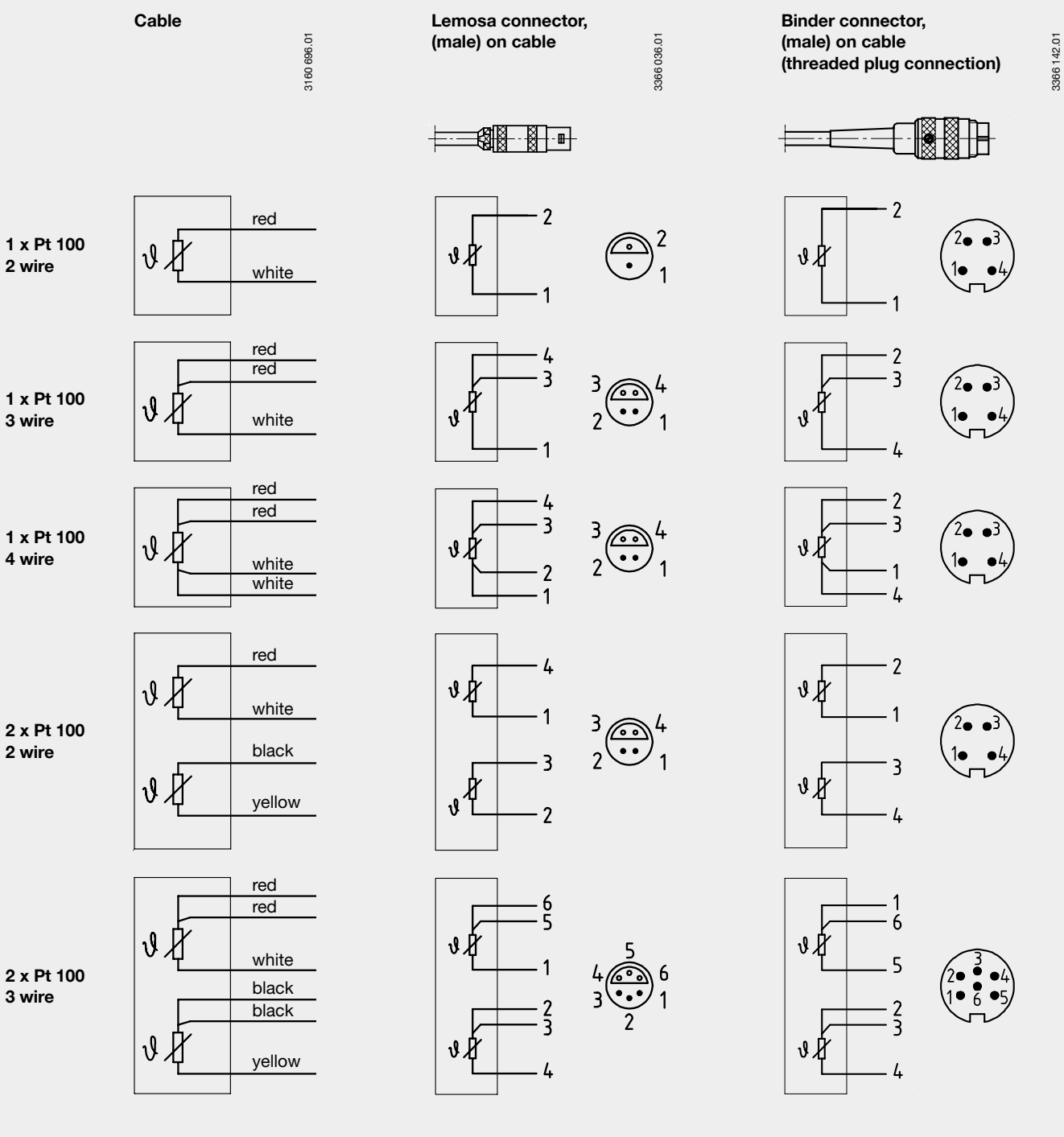

Other connector plugs and other PIN assignments on request

Electrical connection Models TR750 and TR760

Connection heads JS and JVA

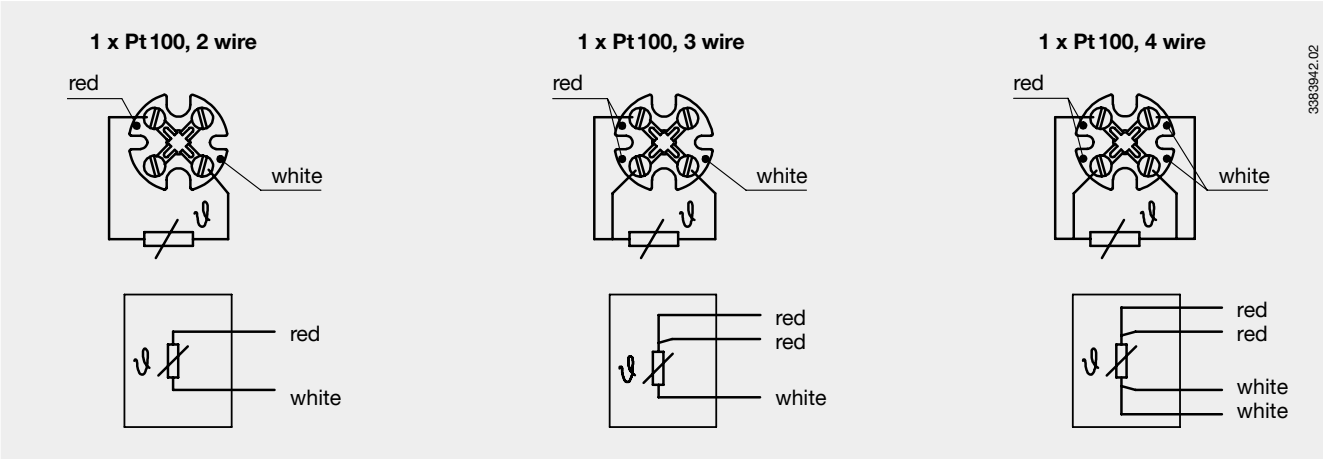

Connection heads form B

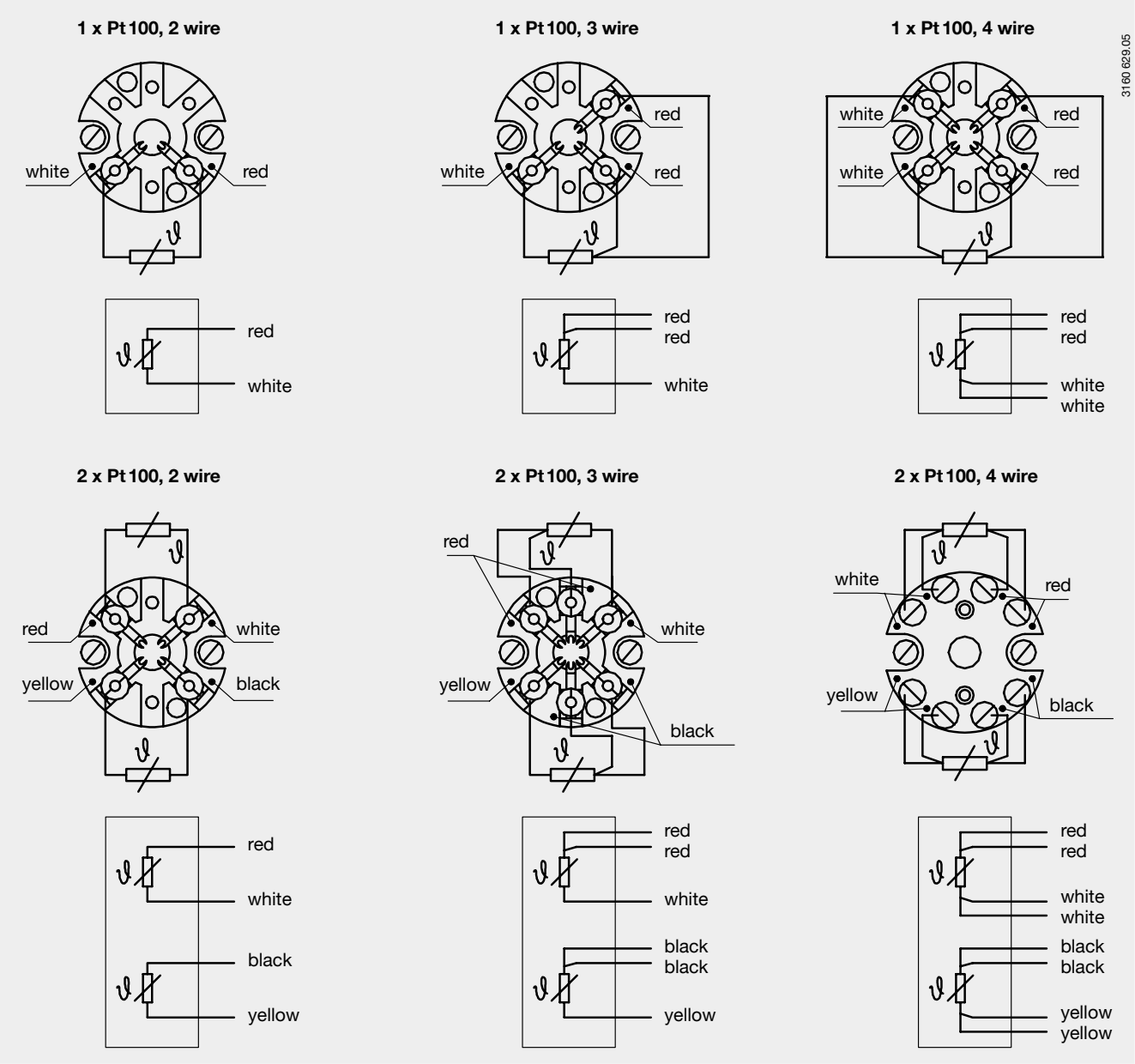

Ordering information, Model TR720

Field No.		Code	Features	
			Explosion protection	
		Z	without	
		Y	according to directive 94/9/EC (ATEX) EEx-i G for gases [1]	
1		**H**	according to directive 94/9/EC (ATEX) EEx-i GD for gases and dusts [1]	
			Type and number of sensors	
		1	1 x Pt100 application range -50 °C ... +250 °C	
		2	2 x Pt100 application range -50 °C ... +250 °C	
		R	1 x Pt100 application range -50 °C ... +450 °C	
		S	2 x Pt100 application range -50 °C ... +450 °C	
		5	1 x Pt100 application range -200 °C ... +450 °C	
		6	2 x Pt100 application range -200 °C ... +450 °C	
		3	1 x Pt100 application range -200 °C ... +600 °C	
		4	2 x Pt100 application range -200 °C ... +600 °C	
2		**?**	other	*please state as additional text*
			Sensor method of connection	
		2	2 wire	
		3	3 wire	
3		**4**	4 wire	
			Sensor limiting error	
		B	class B per DIN EN 60751	
		A	class A per DIN EN 60751 (-50 °C ... +450 °C)	*not with 2 wire connection*
		C	1/3 DIN B at 0 °C	*not with 2 wire connection*
4		**?**	other	*please state as additional text*
			Process connection	
		ZZ	without	
		GD	G ½ B	
		GB	G ¼ B	
		MA	M 8 x 1.0	
5		**??**	other	*please state as additional text*
			Design of process connection	
		Z	without	
		1	compression fitting stainless steel, sealing ring PTFE	
		2	compression fitting stainless steel, sealing ring stainless steel	*not with sheath diameter 2 mm*
		G	male thread	
6		**?**	other	*please state as additional text*
			Sheath material	
		T	stainless steel	
7		**?**	other	*please state as additional text*
			Sheath diameter	
		8	2.0 mm	*only without explosion protection and not with sensor 2 x Pt100*
		4	3.0 mm	*not with sensor 2 x Pt100 with method of connection 3 or 4 wire*
		6	6.0 mm	
8		**?**	other	*please state as additional text*
			Nominal length	
			length in mm, e.g. 0850 for 850 mm	
9		**????**	longer than 9999 mm	*please state as additional text*
			Conductor	
		5	Cu braid, 0.22 mm², max. temperature at the conductor connection 180 °C	
10		**?**	other conductor wire	*please state as additional text*
			Lead length	
		100	100 mm	
			ength in mm, e.g. 080 for 80 mm	
11		**???**	longer than 999 mm	*please state as additional text*

		Additional order info			
		YES	**NO**		
12		**T**	**Z**	quality certificates	*see price list*
13		**T**	**Z**	additional text	*Please state as clearly understandable text!*

1) Please observe the operating instructions and the type-examination certificate.

Order code:

	1		2	3	4		5		6	7	8	9	10	11		12	13
TR720 -		-				-		-							-		

Additional text: _____

_____

Ordering information, Model TR730

Field No.	Code	Features	
		Explosion protection	
	Z	without	
	Y	according to directive 94/9/EC (ATEX) EEx-i G for gases [1]	
1	**H**	according to directive 94/9/EC (ATEX) EEx-i GD for gases and dusts [1]	
		Type and number of sensors	
	1	1 x Pt100 application range -50 °C ... +250 °C	
	2	2 x Pt100 application range -50 °C ... +250 °C	
	R	1 x Pt100 application range -50 °C ... +450 °C	
	S	2 x Pt100 application range -50 °C ... +450 °C	
	5	1 x Pt100 application range -200 °C ... +450 °C	
	6	2 x Pt100 application range -200 °C ... +450 °C	
	3	1 x Pt100 application range -200 °C ... +600 °C	
	4	2 x Pt100 application range -200 °C ... +600 °C	
2	**?**	other	*please state as additional text*
		Sensor method of connection	
	2	2 wire	
	3	3 wire	
3	**4**	4 wire	
		Sensor limiting error	
	B	class B per DIN EN 60751	
	A	class A per DIN EN 60751 (-50 °C ... +450 °C)	*not with 2 wire connection*
	C	1/3 DIN B at 0 °C	*not with 2 wire connection*
4	**?**	other	*please state as additional text*
		Process connection	
	ZZ	without	
	GD	G 1/2 B	
	GB	G 1/4 B	
	MA	M 8 x 1.0	
5	**??**	other	*please state as additional text*
		Design of process connection	
	Z	without	
	1	compression fitting stainless steel, sealing ring PTFE	
	2	compression fitting stainless steel, sealing ring stainless steel	*not with sheath diameter 2 mm*
	G	male thread	
6	**?**	other	*please state as additional text*
		Sheath material	
	T	stainless steel	
7	**?**	other	*please state as additional text*
		Sheath diameter	
	8	2.0 mm	*only without explosion protection and not with sensor 2 x Pt100*
	4	3.0 mm	*not with sensor 2 x Pt100 with method of connection 3 or 4 wire*
	6	6.0 mm	
8	**?**	other	*please state as additional text*
		Nominal length	
		length in mm, e.g. 0850 for 850 mm	
9	**????**	longer than 9999 mm	*please state as additional text*
		Cable	
	P	PVC, application range -20 °C ... +100 °C	
	S	Silicon, application range -50 °C ... +200 °C	
	T	PTFE, application range -50 °C ... +250 °C	
	C	PVC, application range 0 °C ... +100 °C, cable transition watertight	
	D	Silicon, application range 0 °C ... +100 °C, cable transition watertight	
10	**?**	other	*please state as additional text*
		Cable length	
		length in mm, e.g. 0850 for 850 mm	
11	**????**	longer than 9999 mm	*please state as additional text*
		Connector, fitted on cable	
	Z	without	
	6	Lemosa size 1 S (male), max. temperature at connector 85 °C	
	7	Lemosa size 2 S (male), max. temperature at connector 85 °C	
	8	Binder connector (male, threaded plug connection), max. temperature at connector 85 °C	
12	**?**	other	*please state as additional text*

	Additional order info			
	YES	**NO**		
13	**T**	**Z**	quality certificates	*see price list*
14	**T**	**Z**	additional text	*Please state as clearly understandable text!*

1) Please observe the operating instructions and the type-examination certificate.

Order code:

	1		2	3	4		5		6	7	8	9	10	11	12		13	14
TR730 -		-				-		-								-		

Additional text: _____

Ordering information, Model TR740

Field No.		Code	Features	
			Explosion protection	
		Z	without	
		Y	according to directive 94/9/EC (ATEX) EEx-i G for gases [1)]	
1		**H**	according to directive 94/9/EC (ATEX) EEx-i GD for gases and dusts [1)]	
			Type and number of sensors	
		1	1 x Pt100 application range -50 °C ... +250 °C	
		2	2 x Pt100 application range -50 °C ... +250 °C	
		R	1 x Pt100 application range -50 °C ... +450 °C	
		S	2 x Pt100 application range -50 °C ... +450 °C	
		5	1 x Pt100 application range -200 °C ... +450 °C	
		6	2 x Pt100 application range -200 °C ... +450 °C	
		3	1 x Pt100 application range -200 °C ... +600 °C	
		4	2 x Pt100 application range -200 °C ... +600 °C	
2		**?**	other	*please state as additional text*
			Sensor method of connection	
		2	2 wire	
		3	3 wire	
3		**4**	4 wire	
			Sensor limiting error	
		B	class B per DIN EN 60751	
		A	class A per DIN EN 60751 (-50 °C ... +450 °C)	*not with 2 wire connection*
		C	1/3 DIN B at 0 °C	*not with 2 wire connection*
4		**?**	other	*please state as additional text*
			Process connection	
		ZZ	without	
		GD	G 1/2 B	
		GB	G 1/4 B	
		MA	M 8 x 1.0	
5		**??**	other	*please state as additional text*
			Design of process connection	
		Z	without	
		1	compression fitting stainless steel, sealing ring PTFE	
		2	compression fitting stainless steel, sealing ring stainless steel	*not with sheath diameter 2 mm*
		G	male thread	
6		**?**	other	*please state as additional text*
			Sheath material	
		T	stainless steel	
7		**?**	other	*please state as additional text*
			Sheath diameter	
		8	2.0 mm	*only without explosion protection and not with sensor 2 x Pt100*
		4	3.0 mm	*not with sensor 2 x Pt100 with method of connection 3 or 4 wire*
		6	6.0 mm	
8		**?**	other	*please state as additional text*
			Nominal length	
			length in mm, e.g. 0850 for 850 mm	
9		**????**	longer than 9999 mm	*please state as additional text*
			Connector	
		1	Lemosa size 1 S (female), max. temperature at connector 85 °C	
		2	Lemosa size 2 S (female), max. temperature at connector 85 °C	
10		**?**	other	*please state as additional text*

		Additional order info			
		YES	**NO**		
11		**T**	**Z**	quality certificates	*see price list*
12		**T**	**Z**	additional text	*Please state as clearly understandable text!*

1) Please observe the operating instructions and the type-examination certificate.

Order code:

	1	2	3	4	5	6	7	8	9	10	11	12
TR740 -		-			-	-					-	

Additional text: _____

Ordering information, Model TR750

Field No.	Code	Features	
		Explosion protection	
	Z	without	
	Y	according to directive 94/9/EC (ATEX) EEx-i G for gases [1]	
1	H	according to directive 94/9/EC (ATEX) EEx-i GD for gases and dusts [1]	
		Type and number of sensors	
	1	1 x Pt100 application range -50 °C ... +250 °C	
	2	2 x Pt100 application range -50 °C ... +250 °C	
	R	1 x Pt100 application range -50 °C ... +450 °C	
	S	2 x Pt100 application range -50 °C ... +450 °C	
	5	1 x Pt100 application range -200 °C ... +450 °C	
	6	2 x Pt100 application range -200 °C ... +450 °C	
	3	1 x Pt100 application range -200 °C ... +600 °C	
	4	2 x Pt100 application range -200 °C ... +600 °C	
2	?	other	*please state as additional text*
		Sensor method of connection	
	2	2 wire	
	3	3 wire	
3	4	4 wire	
		Sensor limiting error	
	B	class B per DIN EN 60751	
	A	class A per DIN EN 60751 (-50 °C ... +450 °C)	*not with 2 wire connection*
	C	1/3 DIN B at 0 °C	*not with 2 wire connection*
4	?	other	*please state as additional text*
		Process connection	
	ZZ	without	
	GD	G 1/2 B	
	GB	G 1/4 B	
	MA	M 8 x 1.0	
5	??	other	*please state as additional text*
		Design of process connection	
	Z	without	
	1	compression fitting stainless steel, sealing ring PTFE	
	2	compression fitting stainless steel, sealing ring stainless steel	*not with sheath diameter 2 mm*
	G	male thread	
6	?	other	*please state as additional text*
		Sheath material	
	T	stainless steel	
7	?	other	*please state as additional text*
		Sheath diameter	
	4	3.0 mm	*not with sensor 2 x Pt100 with method of connection 3 or 4 wire*
	6	6.0 mm	
8	?	other	*please state as additional text*
		Nominal length	
		length in mm, e.g. 0850 for 850 mm	
9	????	longer than 9999 mm	*please state as additional text*
		Connection head	
	9	JS (aluminium)	*only without explosion protection for dusts, transmitter installation not possible*
	1	BS (aluminium)	
	V	JVA (stainless steel)	*transmitter installation not possible*
10	?	other	*please state as additional text*
		Cable entry to connection head	
	5	M16 x 1.5	*connection head JS*
	4	M20 x 1.5	*connection head BS*
	7	M12 x 1.5	*connection head JVA*
11	?	other	*please state as additional text*
		Transmitter	
	ZZ	without	
12	TA	mounted on the measuring insert	

	Additional order info			
	YES	NO		
13	T	Z	quality certificates	*see price list*
14	T	Z	additional text	*Please state as clearly understandable text!*

1) Please observe the operating instructions and the type-examination certificate.

Order code:

	1		2	3	4		5		6	7	8	9	10	11	12			13	14
TR750 -		**-**				**-**		**-**								**Z Z**	**-**		

Additional text: _____

_____

Ordering information, Model TR760

Field No.	Code	Features	
		Explosion protection	
	Z	without	
	Y	according to directive 94/9/EC (ATEX) EEx-i G for gases [1)]	
1	H	according to directive 94/9/EC (ATEX) EEx-i GD for gases and dusts [1)]	
		Type and number of sensors	
	1	1 x Pt100 application range -50 °C ... +250 °C	
	2	2 x Pt100 application range -50 °C ... +250 °C [2)]	
	R	1 x Pt100 application range -50 °C ... +450 °C	
	S	2 x Pt100 application range -50 °C ... +450 °C [2)]	
	5	1 x Pt100 application range -200 °C ... +450 °C	
	6	2 x Pt100 application range -200 °C ... +450 °C [2)]	
	3	1 x Pt100 application range -200 °C ... +600 °C	
	4	2 x Pt100 application range -200 °C ... +600 °C [2)]	
2	?	other	*please state as additional text*
		Sensor method of connection	
	2	2 wire	
	3	3 wire	
3	4	4 wire	
		Sensor limiting error	
	B	class B per DIN EN 60751	
	A	class A per DIN EN 60751 (-50 °C ... +450 °C)	*not with 2 wire connection*
	C	1/3 DIN B at 0 °C	*not with 2 wire connection*
4	?	other	*please state as additional text*
		Process connection	
	GD	G 1/2 B	
	GB	G 1/4 B	
	ND	1/2 NPT	
	MI	M 20 x 1.5	
5	??	other	*please state as additional text*
		Sheath material	
	T	stainless steel	
6	?	other	*please state as additional text*
		Sheath diameter	
	8	2.0 mm	*only without explosion protection and not with sensor 2 x Pt100*
	4	3.0 mm	*not with sensor 2 x Pt100 with method of connection 3 or 4 wire*
	6	6.0 mm	
	7	8.0 mm	*tubing*
7	?	other	*please state as additional text*
		Nominal length	
		length in mm, e.g. 0850 for 850 mm	
8	????	longer than 9999 mm	*please state as additional text*
		Connection head	
	1	BS (aluminium)	*only transmitter T19/T24/T31 as option possible*
	2	BSZ (aluminium)	
	3	BSZ-H (aluminium)	*mounting of an optional transmitter in the cap possible*
	T	BSZ-K (plastic)	
	S	BSZ-HK (plastic)	*mounting of an optional transmitter in the cap possible*
	4	BSS (aluminium)	
	5	BSS-H (aluminium)	*mounting of an optional transmitter in the cap possible*
	H	BSZ-H with digital temperature indicator DIH10 (set to transmitter range)	*only without explosion protection for use a transmitter (4...20 mA) is required*
	J	BSZ-H with digital temperature indicator DIH10-Ex (set to transmitter range)	*an Ex-certified transmitter (4...20 mA) is required*
	9	JS (aluminium)	*only without explosion protection for dusts, transmitter installation not possible*
	V	JVA (stainless steel)	*transmitter installation not possible*
9	?	other	*please state as additional text*
		Cable entry to connection head	
	4	M20 x 1.5	*connection heads form B*
	5	M16 x 1.5	*connection head JS*
	7	M12 x 1.5	*connection head JVA*
10	?	other	*please state as additional text*
		Transmitter	
	ZZ	without	
	TA	mounted on the measuring insert	
11	TB	mounted in the cup of the connection head	

Field No.	Code	Features

		Additional order info			
		YES	NO		
12		T	Z	quality certificates	*see price list*
13		T	Z	additional text	*Please state as clearly understandable text!*

1) Please observe the operating instructions and the type-examination certificate.
2) 2xPt100 in combination with 2 transmitters on request.

Order code:

	1		2	3	4		5			6	7	8	9	10	11		12	13
TR760 -		**-**				**-**		**-**	**G**							**Z Z**	**-**	

Additional text: _____

_____

Specifications and dimensions given in this leaflet represent the state of engineering at the time of printing.
Modifications may take place and materials specified may be replaced by others without prior notice.

9055924 08/2005 GB

WIKA Alexander Wiegand GmbH & Co. KG
Alexander-Wiegand-Straße 30
63911 Klingenberg/Germany
Phone (+49) 93 72/132-0
Fax (+49) 93 72/132-406
E-Mail info@wika.de
www.wika.de

APPENDIX 15 Worcester Controls – Quarter-Turn Valves

(Left blank intentionally)

FLOWSERVE

Worcester Controls

FCD WCABR1008-00
(Part PB 401)

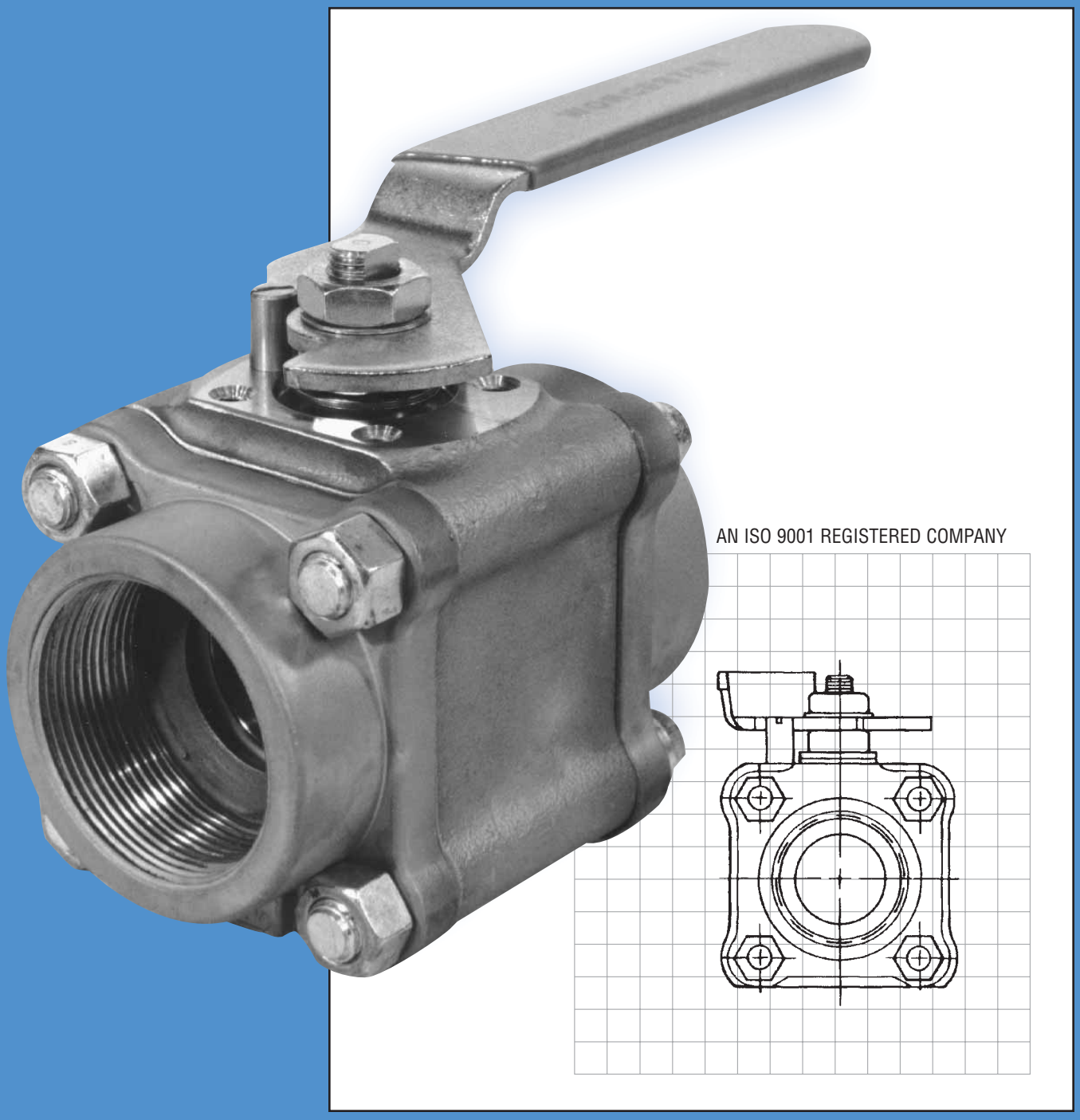

Series 44 Ball Valves

Three-piece ball valves designed to meet all requirements of ANSI B16.34

THE NEW SERIES 44

A quantum advance in ball valve durability, cycle life, leak tightness and automation.

Flowserve Worcester Controls Series 44 three-piece ball valves, for many years the most respected ball valve design in the industry, are now better than ever. A major research, design, and testing program brings you a new valve, designed to ANSI B16.34 specifications with advanced seal technology and body mount bracket design. This means a very strong, tough valve that can handle pressure and unforseen piping strains with a stem seal that extends operational cycle life and a standardized overall design that keeps parts inventory to a minimum. Then there's documentation. B16.34 means complete traceability of assembly and testing procedures, heat codes, and foundry identification. Full CMTRs (Certified Material Test Reports) on pressure vessel parts are optionally available. Valve identification is provided on a stainless steel nameplate meeting MSS SP-25.

High Performance

An improved stem seal design, consisting of live-loaded PEEK and Polyfill® thrust bearings and seals, significantly increases valve cycle life over conventional ball valves and extends time between adjustments. In manual valves, the two spring washers are compressed by two retaining nuts. A single Nylon-insert locking nut and four spring washers are used on automated valves.

Body-Mounted Actuator Design

Actuators for Worcester's Series 44 three-piece valves are mounted on rigid, precisely machined, box-style brackets bolted to the valve center section. This brings a number of advantages to the valve user:

- Actuator loads are on the valve body;
- Actuators and brackets can be removed for service without affecting valve or piping integrity;
- Easy access for stem seal adjustment;
- Inventory simplification. Mounting brackets are common to three-piece and equivalent flanged valves.

STEM SEALS

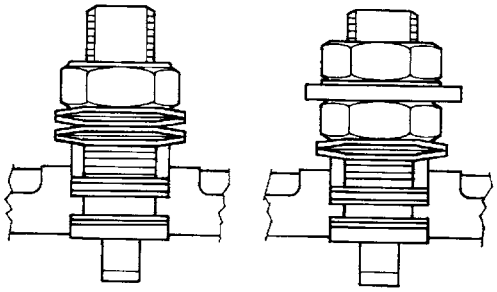

Automated Valve Manual Valve

1¼"–2" ¼"–1"

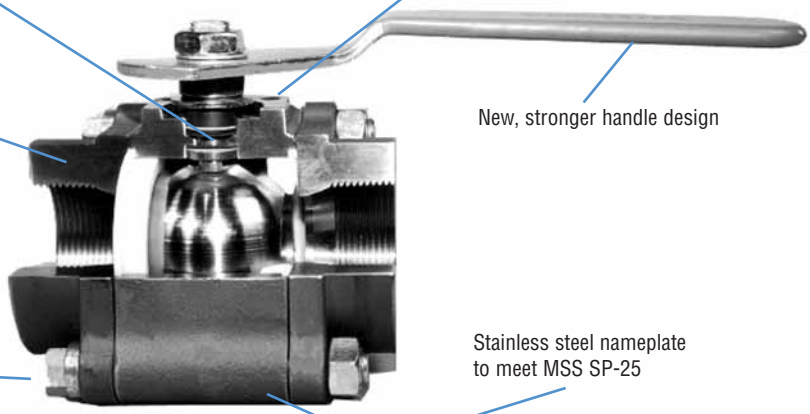

DIMENSIONS

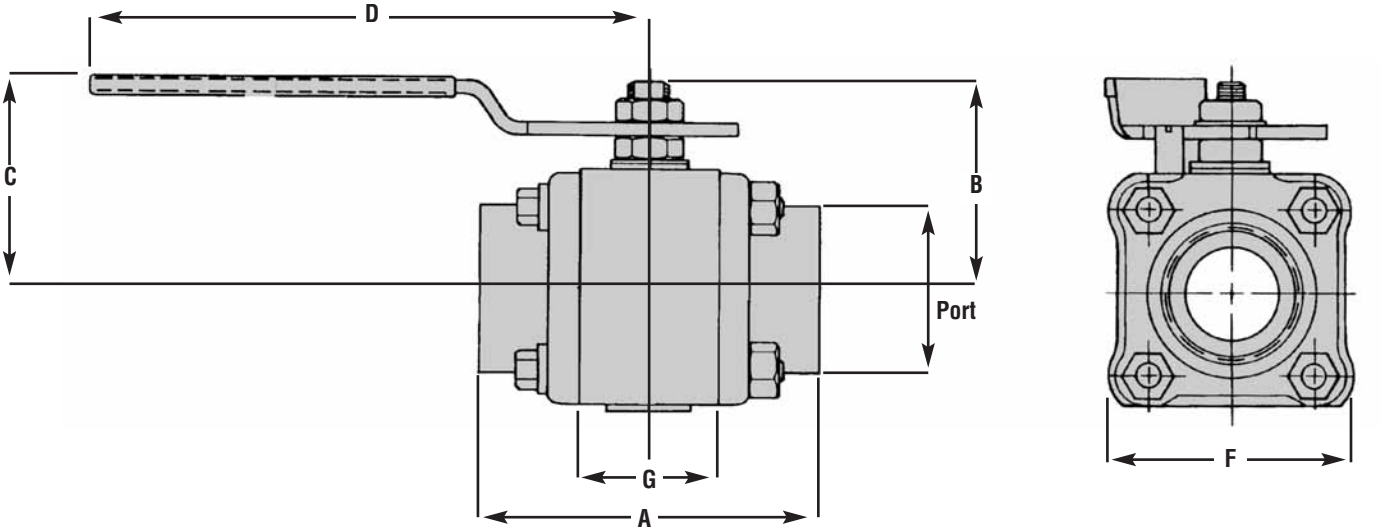

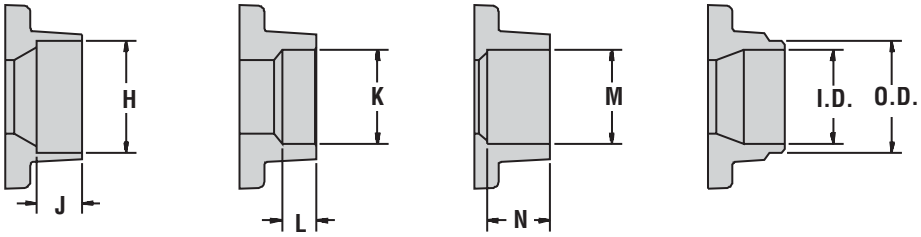

SOCKET WELD
SW

O.D. TUBE END
SWO

TUBE END TE
K, L, OR M
(Copper Tube)

BUTT WELD BW
SCH. 5, 10 (Stainless Steel)
SCH. 40, 80 (Carbon Steel)

**The inside configuration of O.D. tube pipe ends varies by size and material.*
**For XBO and TC ends, call Flowserve.*

inches (mm)

Valve Size	A	B	C	D	F	G	Socket Weld SW		O.D. Tube End SWO		O.D. Tube End TE		Butt Weld Stainless Steel				Butt Weld Carbon Steel				Port	Approx. Weight lb. (kg)
													BW5 Sch. 5		BW1 Sch. 10		BW4 Sch. 40		BW8 Sch. 80			
							H	J	K	L	M	N	O.D.	I.D.	O.D.	I.D.	O.D.	I.D.	O.D	I.D.		
1/4"	2.54 (64.5)	1.55 (39.4)	1.76 (44.7)	5.53 (140)	1.75 (44.5)	.813 (20.7)	.555 (14.1)	.44 (11.2)	— —	— —	.378 (9.6)	.37 (9.4)	— —	— —	.55 (14.0)	.406 (10.3)	.550 (14.0)	.344 (8.7)	— —	— —	.44 (11.2)	1.10 (.50)
3/8"	2.54 (64.5)	1.55 (39.4)	1.76 (44.7)	5.53 (140)	1.75 (44.5)	.813 (20.7)	.690 (17.5)	.44 (11.2)	— —	— —	.503 (12.8)	.44 (11.2)	— —	— —	.67 (17.0)	.547 (13.9)	.670 (17.0)	.516 (13.1)	— —	— —	.44 (11.2)	1.10 (.50)
1/2"	2.54 (64.5)	1.55 (39.4)	1.76 (44.7)	5.53 (140)	1.75 (44.5)	.813 (20.7)	.855 (21.7)	.44 (11.2)	.510 (13.0)	.44 (11.2)	.628 (15.6)	.56 (14.2)	.840 (21.3)	.710 (18.0)	.84 (21.3)	.672 (17.1)	.840 (21.3)	.625 (15.9)	.840 (21.3)	.550 (14.0)	.44 (11.2)	1.10 (.50)
3/4"	2.76 (70.1)	1.64 (41.7)	1.86 (47.2)	5.53 (140)	2.00 (50.8)	.969 (24.6)	1.065 (27.1)	.56 (14.2)	.760 (19.3)	.56 (14.2)	.878 (22.3)	.81 (20.6)	1.05 (26.7)	.920 (23.4)	1.05 (26.7)	.875 (22.2)	1.05 (26.7)	.812 (20.6)	1.05 (20.6)	.753 (26.7)	.56 (14.2)	1.75 (.79)
1"	3.66 (93.0)	2.19 (55.6)	2.28 (57.9)	6.53 (166)	2.38 (60.5)	1.25 (31.8)	1.330 (33.8)	.72 (18.3)	1.01 (25.7)	.56 (14.2)	1.129 (28.7)	.97 (24.5)	1.31 (33.3)	1.18 (30.1)	1.31 (33.3)	1.09 (27.8)	1.31 (33.3)	1.05 (26.6)	1.31 (33.3)	.957 (24.3)	.81 (20.6)	3.10 (1.41)
1 1/4"	4.16 (105)	2.38 (60.5)	2.47 (62.7)	6.53 (166)	2.70 (68.6)	1.63 (41.3)	1.675 (42.5)	.72 (18.3)	1.26 (32.0)	.62 (15.8)	1.379 (35.0)	1.03 (26.2)	1.66 (42.2)	1.53 (38.9)	1.66 (42.2)	1.44 (36.5)	1.66 (42.2)	1.38 (35.1)	1.66 (42.2)	1.27 (32.3)	1.00 (25.4)	4.50 (2.04)
1 1/2"	4.50 (114)	2.88 (73.2)	2.83 (71.9)	8.03 (204)	3.16 (80.3)	1.91 (48.4)	1.915 (48.6)	.72 (18.3)	1.51 (38.4)	.62 (15.8)	1.629 (41.4)	1.15 (29.2)	1.91 (48.5)	1.77 (45.0)	1.91 (48.5)	1.67 (42.5)	1.91 (48.5)	1.59 (40.5)	1.91 (48.5)	1.52 (38.6)	1.25 (31.8)	6.20 (2.82)
2"	4.94 (126)	3.06 (77.7)	3.02 (76.7)	8.03 (204)	3.56 (90.4)	2.22 (56.3)	2.406 (61.1)	.84 (21.3)	2.01 (51.1)	.67 (17.0)	2.129 (54.1)	1.15 (29.2)	2.38 (60.5)	2.24 (57.0)	2.38 (60.5)	2.15 (54.5)	2.38 (60.5)	2.06 (52.4)	2.38 (60.5)	1.93 (48.9)	1.50 (38.1)	9.50 (4.31)

Dimensions are for reference only. For tolerances, consult Flowserve.

PARTS IDENTIFICATION

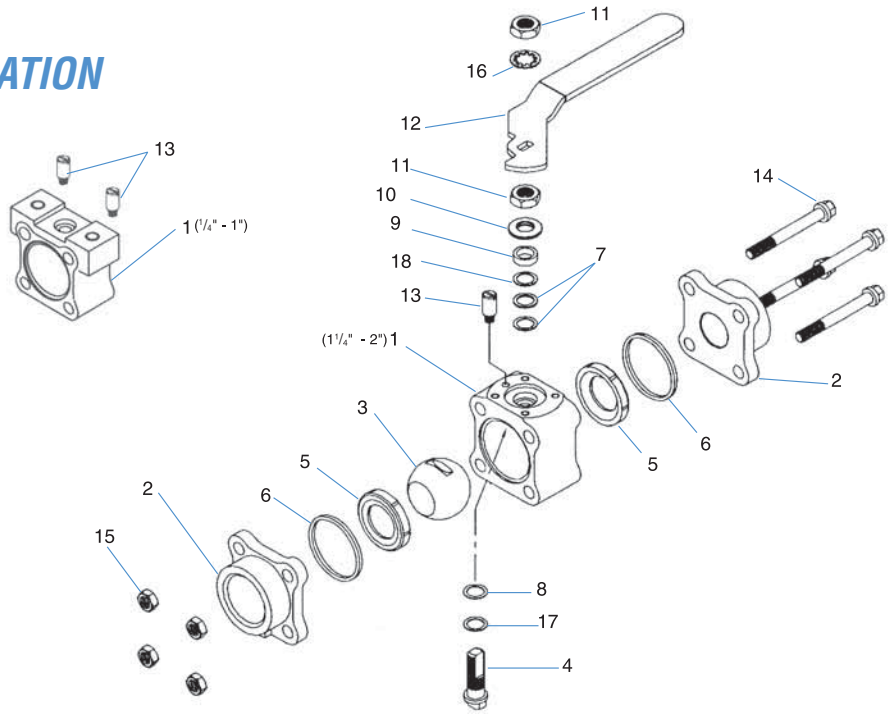

No.	Part	Qty	Material
1	Valve Body	1	Brass ASTM B283 Gr. C3770 Forged Carbon Steel ASTM A105 Forged or ASTM A216 Gr. WCB Cast Stainless Steel ASTM A351 Gr. CF8M Cast Alloy 20 ASTM A351 Gr. CN7M Cast
2	Pipe Ends**	2	Same as body material except stainless weld ends and Tri-Clamp® are Grade CF3M
3, 4	Ball and Stem Combinations	1	Brass ASTM B16 Gr. H02 Hard Chrome Plated ball; ASTM B16 Stem Stainless Steel ASTM A479 Gr. 316 S.S. Alloy 20 ASTM B473 Monel ASTM B164 Gr. N04400 Hastelloy C ASTM B574 Gr. N10276
5	Seats	2	Buna, Neoprene, TFE, Reinforced TFE, Polyfill, UHMWPE, High-per Fill, Lubetal
6	Body Seals	2	Buna, Neoprene, TFE, EPR, Viton, TFE Coated, 316 S.S. "S" gasket, UHMWPE, Graphite Coated 316 S.S. "S" Gasket
7	Stem Seal	2	Polyfill (UHMWPE with UHMWPE seats; Graphite with High-per Fill seats)
8	Thrust Bearing	1	Polyfill (UHMWPE with UHMWPE seats; PEEK with High-per Fill seats; Delrin with Lubetal seats)

No.	Part	Qty	Material
9	Stem Seal Follower	1	316 Stainless Steel
10	Belleville Washers†	2	Carbon Steel: Zinc Plated ANSI 301 Stainless Steel
11	Retaining Nut†	2	Carbon Steel: Zinc Plated; ANSI 300 Series Stainless Steel: Zinc Plated
12	Handle Assembly†	1	Carbon Steel: Zinc Plated ANSI 300 Series Stainless Steel Vinyl Covered
13	Stop Pin†	1 or 2	Carbon Steel: Zinc Plated S.S. ASTM A276 300 Series
14, 15	Body Bolts and Nuts†	4	Carbon Steel and Brass Valves Bolt — A193 Gr B7; Zinc Plated Nut — ASTM A194 Gr. 2H; Zinc Plated Stainless Steel and Alloy 20 Valves Bolt — ASTM A193 Gr. B8: Zinc Plated Nut — ASTM A194 Gr. 8 S7 Stainless Steel Externals Option Bolt — ASTM A193 Gr. B8: Zinc Plated Nut — ASTM A194 Gr. 8
16	Lockwasher†	1	Carbon Steel: Zinc Plated Stainless Steel 300 Series
17	Thrust Bearing Protector*	1	PEEK (UHMWPE with UHMWPE seats; Delrin with Lubetal seats)
18	Seal Protector*	1	PEEK
19	Name Plate (not shown)	1	Stainless Steel ANSI 304

†Stainless Steel standard on Series 4466 and 44AA valves.
*Oxygen Service Valves use Polyfill in place of PEEK.
**All stainless steel weld ends in 316L.

MULTIPLE END CONNECTIONS, SEAT AND SEAL COMBINATIONS

Available through a nationwide network of distributors, Flowserve Worcester Controls Series 44 quarter-turn ball valves and replacement parts are stocked and ready to be adapted to each individual application.

Features that make this tough, reliable ball valve so unique include tight shutoff, smooth two-way flow, advanced seat materials, a variety of interchangeable end connections, swing away three-piece construction, and a design ready for automation.

A variety of pipe ends, including socket weld, screw ends, butt weld or any combination of these, enables Series 44 valves to be adapted to fit standard and more unusual piping situations. **Series 44 (V67) valves can also be welded in place, fully assembled with "G" graphite-coated 316 stainless steel body seals and reinforced TFE, Polyfill, or High-per Fill® seats.**

The range of Worcester's seat materials is unmatched and includes Buna, Neoprene, TFE, Reinforced TFE, Polyfill, Lubetal™, High-per Fill and UHMWPE. These seats easily handle a great majority of industrial fluids with temperatures from -50°F to +600°F including steam, chemicals, petrochemicals, petroleum products, caustics and fluids containing solids, fibrous or abrasive materials.

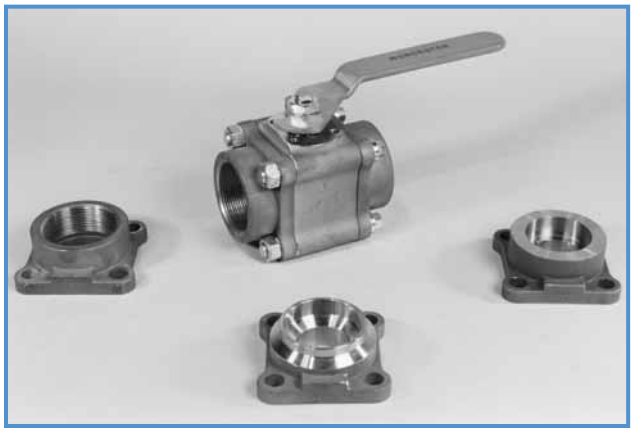

SWING-OUT DESIGN FOR EASY MAINTENANCE

The Series 44 is especially well suited for use in piping systems where line breaks are required and total entry into the line is necessary. The center section can swing out, eliminating the need to cut a valve out of line and having to replace both the valve and the pipe. Because of this design, the seats, seals and ball can all be replaced quickly and easily without disturbing pipe alignment. Acting as both a valve and a union, the Series 44 eliminates the need for a separate union.

TIGHT SHUTOFF AND BIDIRECTIONAL SEALING

Worcester's three-piece ball valves are designed to seal bidirectionally against resilient seats. Patented relief slots assist in downstream sealing and reduce torque. The ball is forced to the downstream side under pressure and forced against the downstream seat to effect and maintain a seal. Consequently, the valve will give bubble-tight shutoff throughout a long service life even with seats of relatively non-resilient materials such as TFE or Polyfill. The seats are also designed to perform a wiping action during each cycle—cleaning foreign materials off both the seat and ball, assuring leak-tight sealing.

The downstream sealing of Worcester's three-piece valves overcomes the two most common difficulties in the use of conventional ball valves: seat damage and high operating torque. A hole in the stem slot prevents any possibility of damage due to trapped cavity pressure when the ball is open. An optional ball cavity vent is available for specific applications. The Worcester design results in smoother, more efficient valve operation.

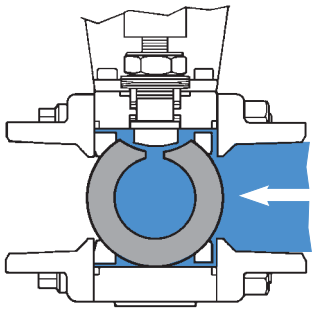

AUTOMATION

Flowserve Worcester Controls offers a complete line of pneumatic and electric automation packages for Series 44 valves. Both electric and pneumatic packages are offered for on/off or proportional control. Available options include:

FOR PNEUMATIC

- Failsafe operation
- End and top mounted limit switches
- Proximity switches
- Single and double acting pneumatic and electropneumatic positioners
- Pulsair® zero air bleed loop-powered positioner
- ACCESS™ integral solenoid and limit switch packages

FOR ELECTRIC

- TYPE 4, 4x, 7 and 9 enclosures
- Remote position indication
- Electronic positioner
- Single loop, PID controller
- Computer interface
- Many more options for today's computer control applications.

SPECIFICATIONS

Series 44 Ball Valves

Valve Sizes: ¼", ⅜", ½", ¾", 1", 1¼", 1½", 2"

Valve Body Pressure Rating For Carbon Steel, Stainless Steel, Alloy 20 Valves: ANSI Class 600

¼" – 2"—Carbon Steel	1480 psi
¼" – 2"—Stainless Steel	1440 psi
¼" – 2"—Alloy 20®	1200 psi

Valve Body Pressure Rating for Brass Valves:

¼" – 1"—1500 psi

1¼" – 2"—1000 psi

This is the body pressure rating. Seat selection may lower the valve pressure rating. See page 5. Example: A ¾" Series 44 brass valve has a rating of 1500 psi at 70°F. Selection of TFE seats, operating at a fluid temperature of 160°F, limits total allowable pressure in the valve to 800 psi.

Body and Pipe End Materials:
Brass, Carbon Steel, 316 Stainless Steel, Alloy 20
See page 6 for material specifications

Ball: Brass, 316 Stainless Steel, Monel®, Alloy 20, Hastelloy C®

Design Specifications:
ANSI B16.34
ANSI B16.25 - Butt weld ends (weld end preparation)
ANSI B16.11
ANSI B1.20.1 - NPT pipe threads
MSS SP-25 - Valve marking
MSS SP-72 - Socket weld ball valves
NACE - MRO I-75 1984 Rev. Category 3

Seats: Buna, Neoprene, TFE, glass-reinforced TFE, UHMWPE (ultra high molecular weight polyethylene), Polyfill (carbon, graphite filled TFE), High-per Fill, Lubetal

Body Seals, Choice of:
Buna, Neoprene, Viton®, EPDM, TFE, UHMWPE, TFE coated 316 Stainless Steel, graphite coated 316 Stainless Steel

Seals and Thrust Bearings:
PEEK, Graphite and Polyfill
See page 6 for individual parts identification and variations.

Temperature Range:
Dependent upon seal and seat choice, will operate from -50°F to +600°F.

Pressure Range: Valves will operate from 1 micron absolute to +1480 psi.

Seat/Seal Leakage:
Standard valves, less than 1 x 10^{-6} cc He/sec in board and through (bubble-tight is 1 x 10^{-4} cc He/sec). With preparation, leakage will be less than 2 x 10^{-9} cc He/sec. All valves 100% tested to bubble-tight standards.

Optional External Valve Trim:
300 Series stainless steel external components are available as an option on brass and carbon steel valves. They are standard on stainless steel and Alloy 20 valves.

S-7: Complete Stainless Steel trim: handle, handle nut, lock washer, retaining nut, belleville washers, body bolts, nuts, stop pin.

Variations (V-numbers): Listing of V-Number Descriptions

V3	Upstream Relief Hole
V5	Hydrostatic Testing
V6	Source Inspection
V17	Grounding Thrust bearing
V20	Oxygen Service
V32	Oval Handle
V33	Oxygen Service without Source Inspect.
V36	Certificate of Compliance
V37	Certificate of Compliance and Hydro Testing
V38	Assemble without Lubricant
V46	Silicon-free Lubricant
V48	Extended Lever Handle
V58	B16.34 Compliance
V59	Extended Oval Handle
V60	OSHA Lockout
V66	Certificate of Compliance, European Valve Orders
V67	Weld-in-Place Valves

SPECIAL SERVICE AND APPROVALS

Underwriter Laboratory Listed

Flammable liquid shutoff (YRBX)
Gas shutoff (YRPV)
LP gas shutoff (YSDT)
Anhydrous ammonia shutoff (YQAR)
Compressed gas shutoff, including oxygen (YQNZ)
Trim and Drain Valves (VQGU)

Factory Mutual Approval for:

Fire Protection Systems (sprinkler systems, alarm check, dry pipe, deluge valve) Gas and Oil Safety Shutoff

Consult Flowserve when ordering approved valves.

SEAT PRESSURE/TEMPERATURE RATINGS

- Maximum Temperature for Seals:
  UHMWPE: 200°F
  Buna: 250°F
  TFE: 400°F
  TFE coated Stainless Steel: 650°F
  Neoprene: 250°F
  EPR: 350°F
  Viton: 450°F
  Graphite coated Stainless Steel: 1000°F
- "R" (Reinforced TFE) and "P" (Polyfill) seats may be used up to a maximum of 1480 psig as shown. Some decrease in optimum seat life may be expected in some cases above 1000 psig.
- TFE body seals are limited to 200°F temperature swings. (Thermal cycles)
- For high-pressure applications to 3000 psi, Flowserve recommends the Series 4 three-piece valves with Lubetal seats. Refer to brochure WCABR1009. For pressures to 5000 psi, specify the Series H44 Dyn-O-Miser® valve with Lubetal or High-per Fill seats. Refer to brochure WCABR1048.

CAUTION: For high pressure media that are highly flammable, explosive or toxic, consult Flowserve.

NOTE: Standard Worcester valves are assembled with silicon-based break-in lubricant. For other options, consult your distributor or Flowserve.

OPERATING TORQUE FOR AUTOMATED VALVES

Valve Torque:

Before the actuator can be sized for any given valve application, the operating torque required for the valve must be determined. The operating torque of the ball valve is influenced by a number of factors—some are design- and materials-related, others are application- (service conditions) related. Design-related factors include the type and material of the valve seats, while application factors include system pressure, media and frequency of operation.

For complete valve operating torque data, refer to Worcester's Actuator Sizing Manual (ASM). This eight-page publication explains the concept of valve torque, presents torque curves for each seat material, and provides correction factors for media and the type of service such as on-off operation, cycle frequency, etc.

Other Approvals

- U.S.C.G. - United States Coast Guard
- U.S.D.A. - United States Dept. of Agriculture

Valve Size	Cv	Equivalent Length of Sched. 40 Pipe (ft.)
¼", ⅜"	8	0.9
½"	8	3.1
¾"	12	6.3
1"	32	3.1
1¼"	46	6.3
1½"	82	4.3
2"	120	7.5

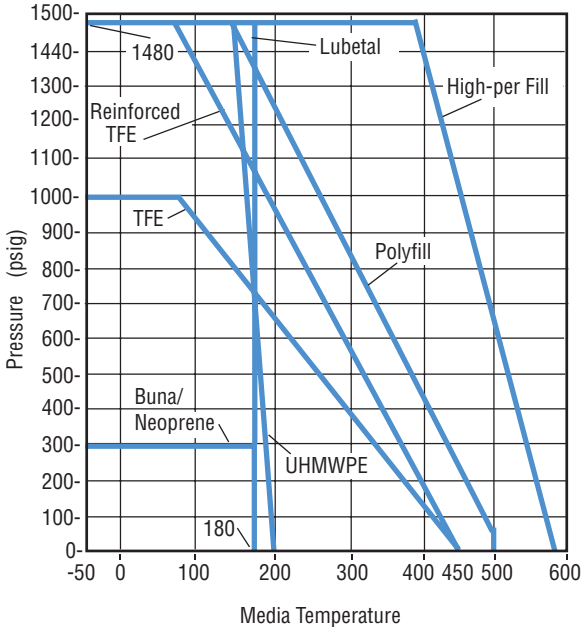

How to Order*

1 1/4" ___ 44 6 6 T SW **

Valve Size	Options	Product Series	Body, Pipe Ends	Ball & Stem	Seats	Body Seals	Ends
1/4" 3/8" 1/2" 3/4" 1" 1 1/4" 1 1/2" 2"	**Blank -** Built with lever handle **E -** No handle valve built for automation **A -** No handle†† **B -** No handle†† **G -** Stem Grounding Spring **K -** Locking Handle **V -** Vacuum Service Prep **X -** Oxygen Service Prep	**44**	**1-** Brass **4-** Carbon Steel **6-** 316 S.S. **A-** Alloy 20	**1-** Brass (chrome plated) **4-** Carbon Steel (chrome plated) **6-** 316 S.S. **7-** Monel **A-** Alloy 20 **C-** Hastelloy C	**B-** Buna **N-** Neoprene **T-** TFE **R-** Reinforced TFE **P-** Polyfill **U-** UHMWPE **X-** High-per Fill **Y-** Lubetal	**B-** Buna **N-** Neoprene **T-** TFE **E-** EPR **V-** Viton **M-** TFE Coated 316 S.S. **G-** Graphite Coated 316 S.S. **U-** UHMWPE	**SE -** Screwed Pipe Ends (NPT) Any Sch. Pipe† Carbon Steel Stainless Steel Alloy 20 Butt Weld (BW) ends: **BW1 -** Stainless Steel, Sch. 10 **BW4 -** Carbon Steel, Sch. 40 **BW4 -** Stainless Steel, Sch. 40 **BW5 -** Stainless Steel, Sch. 5 **BW8 -** Carbon Steel, Sch. 80 **TE -** Solder/Sweat Ends Brass - Type K, L, or M copper tube **SW -** Socket Weld Ends Any Sch. Pipe† Carbon Steel Stainless Steel Alloy 20 **SWO -** Socket Weld Ends O.D. Tube S.S.(not available in 1/4" and 3/8" sizes) **TC -** Quick Disconnect **XBO -** Extended Butt Weld **NP -** No Pipe Ends, body bolts and nuts

***TO ORDER V67 WELD-IN-PLACE VALVES:** Series 44 valves with "G" body seals and seats of Reinforced TFE (R), Polyfill (P), or High-per Fill (X), may be welded in a line in the assembled condition.

**Variations (V-Numbered Options) see page 4 for listing. Leave blank if no variations.

Add V58 to ordering code if full B16.34 compliance is required.
Full ANSI B16.34 compliance requires a hydrotest and certified material test reports.

ORDERING EXAMPLE: 1¼" Series 44 valve with 316 S.S. body, ball and stem, TFE seats and seals, and socket weld ends.

EXTERNALS: Externals, including handles, are normally constructed of zinc plated carbon steel. Handles are vinyl coated. When required, the body bolts, nuts, retaining nut, handle nut, lock-washer, stop pin and handle are also available in stainless steel by special order (S-7 suffix in ordering code), and come standard when ordering 4466 Stainless Steel or 44AA Alloy 20 valves.

†All IPS schedules of stainless, carbon and alloy steel pipe, S.P.S. copper pipe and red brass pipe.

††To order a Series 44 valve for use with:
34 or 36 actuators, use prefix ordering code "A". EXAMPLE: 1" A 4446 6 PMSE
39 or 75 actuators, use prefix ordering code "B".

Caution: Ball valves can retain pressurized media in the body cavity when closed. Use care when disassembling. Always open valve to relieve pressure prior to disassembly. Due to continuous development of our product range, we reserve the right to alter the product specifications and information contained in this brochure as required.

Monel® is a registered trademark of Inco Alloys International.
Hastelloy® is a registered trademark of Haynes International.
Tri-Clamp® is a registered trademark of Ladish Co.
Viton® is a registered trademark of E.I. duPont.
Polyfill® is a registered trademark of Flowserve Corp.
Lubetal™ is a trademark of Garlock, Inc.
ACCESS™ is a trademark of Flowserve Corp.
Alloy 20® is a trademark of CRS Holdings, Inc.
Pulsair® is a registered trademark of Flowserve Corp.
High-per Fill® is a registered trademark of Flowserve Corp.
Dyn-O-Miser® is a registered trademark of Flowserve Corp.

Flowserve Corporation has established industry leadership in the design and manufacture of its products. When properly selected, this Flowserve product is designed to perform its intended function safely during its useful life. However, the purchaser or user of Flowserve products should be aware that Flowserve products might be used in numerous applications under a wide variety of industrial service conditions. Although Flowserve can (and often does) provide general guidelines, it cannot provide specific data and warnings for all possible applications. The purchaser/user must therefore assume the ultimate responsibility for the proper sizing and selection, installation, operation, and maintenance of Flowserve products. The purchaser/user should read and understand the Installation Operation Maintenance (IOM) instructions included with the product, and train its employees and contractors in the safe use of Flowserve products in connection with the specific application.

While the information and specifications contained in this literature are believed to be accurate, they are supplied for informative purposes only and should not be considered certified or as a guarantee of satisfactory results by reliance thereon. Nothing contained herein is to be construed as a warranty or guarantee, express or implied, regarding any matter with respect to this product. Because Flowserve is continually improving and upgrading its product design, the specifications, dimensions and information contained herein are subject to change without notice. Should any question arise concerning these provisions, the purchaser/user should contact Flowserve Corporation at any one of its worldwide operations or offices.

For more information about Flowserve Corporation, contact www.flowserve.com or call USA 1-800-225-6989.

FLOWSERVE CORPORATION
FLOW CONTROL DIVISION
1978 Foreman Drive
Cookeville, Tennessee 38501 USA
Phone: 931 432 4021
Facsimile: 931 432 5518

(Part PB 401)

© 2004 Flowserve Corporation, Irving, Texas, USA. Flowserve and Worcester Controls are registered trademarks of Flowserve Corporation. FCD WCABR1008-00 Printed in USA