ITEM NO.	PART NO.	DESCRIPTION	QTY
1	CO436301	ENCLOSURE, COMMS BOX, CHAMBER	1
2	CO435304	INSERT, MICROPHONE MOUNT, ACETAL	1
3	EM183	MICROPHONE, ELECTROSTATIC	1
4	CO435300	MOUNT, MICROPHONE, PANEL	1
5	FN332	NUT, HEX, HALF, ST ST, A4, M14	1
6	FN089	NUT, NYLOC, M3, 316 ST STEEL	4
7	RN0610-7	O-RING	1
8	CO436100	PCB ASSY, COMMS BOX, CHAMBER	1
9	EM3239	PILLAR, PCB, M3, 13mm HIGH, STYLE 2	4
10	EM3238	POTENTIOMETER, LINEAR, 100R, 1W, 1 TURN	1
11	FB252	SCREW, M/C, PAN HD, M3 x 6mm, S6	4
12	EM3028	SOCKET, JACK, STEREO, 3.5mm, PANEL MOUNT	2
13	EM3032	SWITCH, PUSH BUTTON, DPCO, MOMENTARY	2
14	EM3092	SWITCH, PUSH BUTTON, LATCHING, FLUSH, DPCO	1
15	FW184	WASHER, PLAIN, M3 WHITE NYLON	4
16	FW169	WASHER, PLAIN, M14, SS	1
32	FW169	WASHER, PLAIN, M14, SS	1

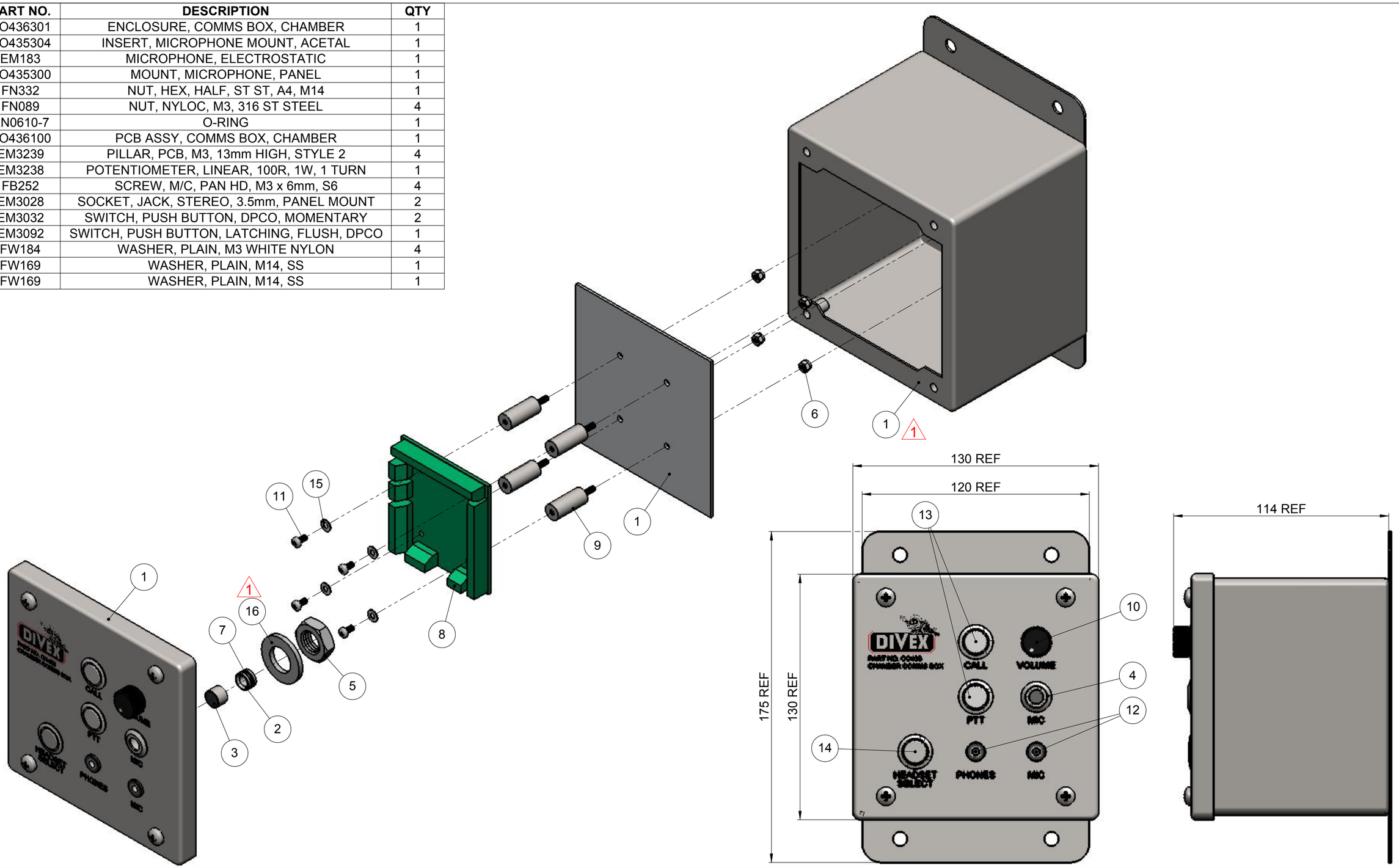

DIVEX OWNS THE COPYRIGHT OF THIS DOCUMENT AND ANY DESIGN RIGHT HEREIN. IT IS SUPPLIED IN CONFIDENCE AND MUST NOT BE USED FOR ANY PURPOSE OTHER THAN THAT FOR WHICH IT IS SUPPLIED AND MUST NOT BE REPRODUCED WITHOUT PERMISSION IN WRITING FROM THE OWNERS.

NOTES:

1 - DENOTES CHANGES MADE AT THIS REVISION.

ALL DIMENSIONS SHOWN ARE IN MM (UOS)
ALL DIMENSIONS BEFORE PLATING (UOS)
REMOVE ALL SHARP EDGES AND BURRS

DIMENSIONAL TOLERANCES

MACHINING		FABRICATION	
NO DECIMAL PLACES	±1.0	SIZE >0 <100	±0.5
ONE DECIMAL PLACE	±0.2	SIZE >100 <500	±1.5
TWO DECIMAL PLACE	±0.05	SIZE >500	±3.0
ANGULAR TOLERANCE	±0.5°	ANGULAR TOLERANCE	±0.5°

MATERIAL: SEE PARTS LIST

FINISH: N/A

THIRD ANGLE PROJECTION

REV	DESCRIPTION	ECN No	BY	DATE	AUTH.BY
R06					
R05					
R04					
R03					
R02					
R01	SPEAKER ENCLOSURE UPDATED & FW169 ADDED	13752	ZD	30/06/2010	IB
R00	ISSUED FOR MANUFACTURE		DR	30/06/2010	CST

DO NOT SCALE DRAWING

TITLE: **BOX, COMMS, PTT, HLB**

DRAWING No.: **CO436S1** REV: **R01**

PART No.: CO436 PRODUCT / PROJECT No.: COMMS

SIZE: A2 SCALE: NTS SHT 1 OF 1

DIVEX LIMITED
ENTERPRISE DRIVE
WESTHILL
ABERDEEN
AB32 6TQ
UNITED KINGDOM

Tel : +44(0)1224 740145
Fax : +44(0)1224 740172
email : info@divexglobal.com
www.divexglobal.com