Operation and Maintenance Manual
Electric Gasmizer Diver Gas Recovery System

Part Number:	A10621
Document Number:	P1805-OM-307
Revision:	13

TABLE OF CONTENTS

Page

Table of Contents
Approval Sheet
Abbreviations
Warnings and Cautions

Chapter 1 - Introduction

1 Operational Note 2
2 General Description 2
3 System Overview 3
4 Diver Equipment 4
5 Bell Exhaust Equipment 5
6 Reprocessing Unit 6
7 Electric Gas Booster 7
8 Gas Supply System 8
9 Control Console 9
10 Safety and Gas Quality 10

Chapter 2 - System Interconnections

1 General Description 2
2 System Installation 2

Chapter 3 - Bell Equipment

1 General Description 2
2 SAECO Valve. 4
3 Water Trap. 6
4 Back Pressure Regulator. 7
5 Diver Tracking System 8
6 Bell External Equipment 10
7 Bell Equipment Maintenance 11
8 Water Trap Inspection and Maintenance. 11
9 SAECO Valve Adjustment 11
10 Relief Valve Adjustment 12
11 BPR Loader 12

Chapter 4 - Reprocessing Unit

1 General Description 2
2 Inlet Section 2
3 Outlet Section. 4
4 Reprocessing Unit – Routine Maintenance 6

Chapter 5 - Control Console

1 General Description 2
2 Booster Panel 3
3 Oxygen Panel 4
4 Control Panel. 5
5 Make-Up Panel 7
6 Control Panel Maintenance 9

Chapter 6 - Gas Booster

1 General Description 3
2 Storage 9
3 Routine Maintenance & Fault Finding. 11
4 Overhaul 15
5 Model K651 Service Spares Kits 87

Chapter 7 - Volume Tank

1 General Description 1
2 Maintenance Schedule 1

Chapter 8 - System Installation and Operation

1 Introduction 2
2 System Start- Up & Operating Procedure 3
3 Gasmizer Bell Card 5
4 Gasmizer Bell Card - One or Two Divers 7
5 Regulator Setting Guidelines – 1 Diver. 14
6 Regulator Setting Guidelines – 2 Divers 16
7 System Operation at Extreme Depths 18
8 Fault Finding 19

Chapter 9 - Spares List

1 Spares Kit List 2
2 Part Assembly – C10700 3
3 Part Assembly – C10710 4
4 Part Assembly – C10880 5
5 Part Assembly – C10730 6
6 Part Assembly – B10400 7
7 Part Assembly - B39750 9
8 Post 2004 (JFD Build) Gas Booster Parts List. 10

Appendix A System Drawings

APPROVAL SHEET

Document Information		
Advitium No	**Title**	**Classification**
P1805-OM-307	Operation and Maintenance Manual Electric Gasmizer Diver Gas Recovery System	Commercial in confidence

Revision History					
Rev	**Date**	**BY**	**CHK**	**APP**	**Comments**
6	23/12/2009	D. Allan	E. Aitken	R. Wylie	ECN: 12490
7	20/02/2012	D. Allan	A. Naylor	M. Stevens	ECN: 14575
8	17/04/2015	J. Lastakauskiene	A. Naylor	S. Coull	ECN: 17231
9	01/12/2015	J. Lastakauskiene	A. Naylor	P. Black	ECN: 18839
10	15/06/2016	JR Cusson	A. Bennett	A. Naylor	ECN: 19021
11	03/12/2019	JR Cusson	J. Massie	A. Naylor	ECN: 21291
12	15/03/2021	JR Cusson	J. Craig	A. Bennett	ECN: 26773
13	01/03/2022	JR Cusson	A. Naylor	A. Bennett	ECN: 28777

Revision 13 Implemented		
Responsibility	**Name**	**Position**
By	J. Cusson	Technical Author
Checked	A. Naylor	Senior Mechanical Engineer
Approved	A. Bennet	Team Leader, Mechanical Engineering

Copyright Details

© 2022 JFD
Copyright of this document is the property of JFD and it may not be copied, used or otherwise disclosed in whole or in part except with prior written permission from JFD or, if this document has been furnished under a contract with another party, as expressly authorised under that contract.

Disclaimer

Whilst every effort has been made to ensure the information within this document is correct at the time of publication, JFD Ltd reserves the right to make changes without notification. Users are recommended to visit www.jfdglobal.com for the most up-to-date versions of manuals.

Review

This document is subject to review and revision in accordance with ISO 9001.

Intentionally blank

ABBREVIATIONS

AC	Alternating Current
bar	Metric unit of pressure, approximately equal to 1 atmosphere
CO_2	Carbon Dioxide
DC	Direct Current
kg	kilogramme
kW	kilo Watt
lpm	litres per minute
mm	millimetre
MSW	Metres of Sea Water
PWS	Potable Water System
RH	Relative Humidity
STP	Standard Temperature and Pressure
TPI	Threads Per Inch
V	Volt

Intentionally blank

WARNINGS AND CAUTIONS

Warnings, Cautions and Notes where used within this manual are placed prior to the text to which they are pertinent. Their uses are as follows;

WARNING

INFORMS THE READER OF AN OPERATION OR STATE WITH POTENTIAL FOR PERSONNEL INJURY.

CAUTION

Informs the reader of an operation or state with potential for damage to equipment.

Note ***Informs the user of additional information for clarification or to assist with an operation.***

Intentionally blank

Chapter 1 - Introduction

Contents

Title **page**

1 Operational Note 1.2
2 General Description 1.2
3 System Overview 1.3
4 Diver Equipment 1.4
5 Bell Exhaust Equipment 1.5
6 Reprocessing Unit 1.6
7 Electric Gas Booster 1.7
8 Gas Supply System 1.8
9 Control Console 1.9
10 Safety and Gas Quality 1.10
10.1 Security of Gas Supply 1.10
10.2 Quality of Gas Supply 1.10

1 Operational Note

Although the Gasmizer system will function correctly with a wide range of helmet/demand regulator/exhaust regulator combinations, any specific claim JFD Ltd. makes to the performance of the system assumes that a JFD / Kirby Morgan helmet fitted with a JFD Ultraflow 601 demand regulator and Ultrajewel 601 exhaust regulator is used.

Due to the large operating range inherant in its design, the JFD Ultrajewel 601 exhaust regulator does not require diver depth tracking. For other types of exhaust valve which require depth tracking, a diver depth tracking facility is provided on the bell equipment.

2 General Description

The purpose of the Gasmizer diver gas recovery system is to recover gas mixtures breathed by divers, re-process it and deliver it into the supply system. The gas is removed from the helmet as it is exhaled by means of a recovery valve. From there it is passed via the bell to the surface where the gas is scrubbed to remove carbon dioxide, filtered to remove moisture and any particulate or biological contaminant and oxygen is added to give the desired breathing mix. The gas is compressed and delivered to storage until required for use when it will be delivered to the bell gas supply console.

The system requires a minimum amount of equipment on the bell, so adding negligible weight and taking up little space. No electrical connections are required in the umbilical so there is no possibility of communications interference or electrical hazard underwater. As the major components are topside, it has been possible to design the system such that it may be serviced while a dive continues.

In addition to recovering divers gas, the system may be used to recycle bell gas thus reducing gas loss due to bell flushing.

The system has several levels of safety back-up, which is described later. A conventional demand system is used and by means of a single action, open or closed circuit operation may be selected. Similarly, the conventional emergency bail-out system is available.

JFD make no recommendation about acceptable ppO_2 and $ppCO_2$ of breathing gas. This is the responsibility of the user. The $\%O_2$ in the system must never exceed 21%.

3 System Overview

Figure 1.1 illustrates the main components of the system. Exhaled gas is recovered from the divers by means of reclaim valves, mounted on helmets. The exhaust umbilicals are connected via SAECO valves (Supply Actuated Exhaust Cut-Off Valves) situated in the bell. Gas then passes via a water trap into a back pressure regulator, which controls the pressure in the exhaust umbilical. The bellman can monitor this pressure on a gauge situated in the bell. Gas is then passed to the surface via a non-return valve and a second water trap.

Figure 1.1 Equipment Layout

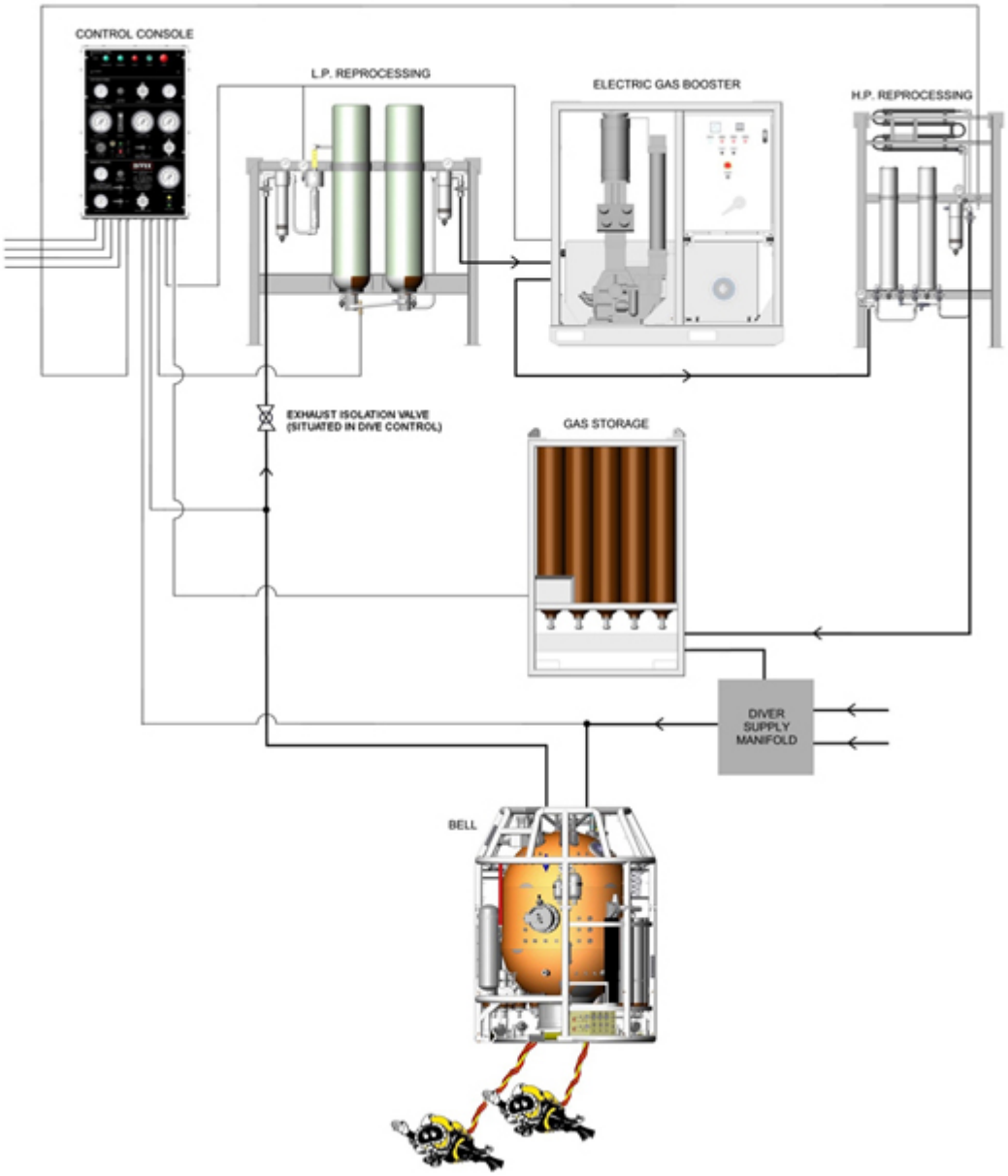

On the surface, the gas enters the Reprocessing Unit, where oxygen is made up to the correct mix. The gas is then passed to an Electric Gas Booster where the pressure is increased prior to returning to the Reprocessing Unit. It is then scrubbed to remove CO_2 and other impurities before being passed to the Volume Tank for storage and eventual re-supply to

the conventional gas supply system. Thus gas is passed via a bell umbilical to the bell gas supply manifold and then to the diver's demand regulator.

Addition of an optional second gas booster will allow 100% redundancy to allow continued operation during maintenance. Similarly two scrubber canisters are provided, either of which can be replenished while a dive continues.

During normal operation the oxygen used by divers is replaced by a metered oxygen flow into the system. This oxygen flow together with all other aspects of system operation may be monitored by the dive supervisor at the control console. In the event of interruption of the gas supply from the reprocessing unit the supervisor is immediately informed by means of an indicator. The divers' gas supply is maintained from the heliox gas bank via regulators first on the make-up panel and subsequently on the bell gas supply console.

The system may be broken down into the following sections:

- Diver Equipment
- Bell Exhaust Equipment
- Reprocessing Unit
- Electric Gas Booster
- Gas Storage and Supply
- Control Console

4 Diver Equipment

Figure 1.2 shows the diver equipment required for the exhaust system. The modifications required are:

1 Fitting the Jewel 601 valve to pass the exhaled gas into the exhaust umbilical.

2 Replacement of the demand regulator by the Ultraflow regulator which although in appearance is similar to a conventional demand regulator, has superior breathing characteristics.

Figure 1.2 Ultrajewel Helmet

5 Bell Exhaust Equipment

The diver exhaust umbilical carries gas from the Reclaim Valve back to the Supply Actuated Exhaust Cut-Off (SAECO) valve in the bell. This valve is held open by the gas pressure in the gas supply line. In the event of loss of pressure in the supply line, the SAECO valve will close, isolating the Reclaim Valve from suction.

In normal operation, exhaust gas passes next to a transparent plastic water trap which removes any bulk moisture that may be present. The design of this water trap is such that it may be drained without taking the system off line. From the water trap, gas passes through a back pressure regulator which maintains the exhaust umbilical pressure at an optimum level, giving minimum breathing resistance to the diver. A tracking system is provided such that the setting of the regulator is adjusted automatically as a diver moves above or below the bell. It is not necessary to use the diver tracking system with the JFD Ultrajewel exhaust regulator fitted to the diving helmet. Gas then passes through a non-return valve and an external water trap to surface for reprocessing.

Figure 1.3 Bell Exhaust Equipment

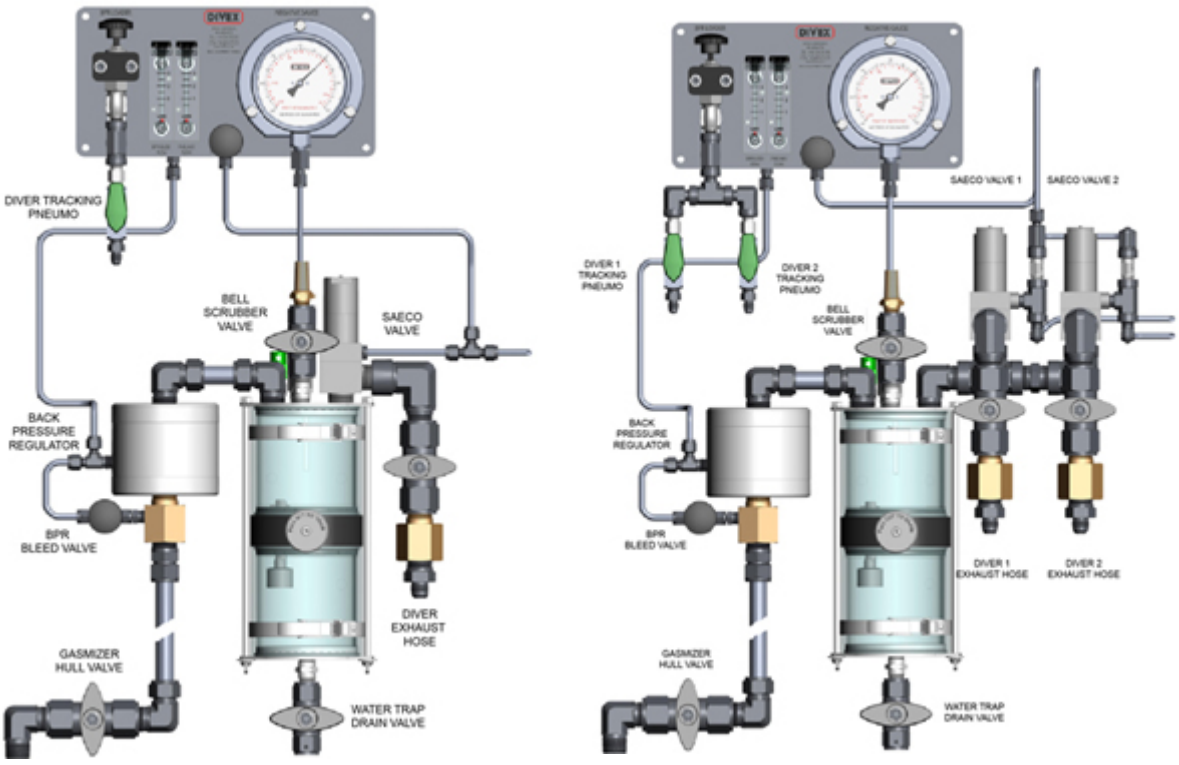

6 Reprocessing Unit

The Reprocessing Unit is bulkhead mounted. Gas passes from the exhaust hose of the bell umbilical to a coalescing moisture separator and particle filter which removes all particles both liquid and solid, down to one micron. Gas flows through a float valve which prevents water contamination, for example, if a hose fitting is loose on the bell. A back pressure regulator similar to that in the bell controls the pressure in the exhaust umbilical. Gas then flows to 2 receivers into which oxygen is injected at a preset rate to compensate for the divers' oxygen consumption. Before passing to the gas booster a further stage of filtration is provided which removes particulate, biological or liquid particles down to 0.01 micron.

On returning from the gas booster, carbon dioxide is removed and the breathing gas purified in scrubber canisters containing soda lime and Purafil. Two independent canisters are provided either of which may be isolated, vented and re-filled while the other is on-line.

Finally, any remaining moisture is condensed out in a "tube in tube" type water-cooled heat exchanger. The gas then passes through a final one micron coalescing filter on its way to the volume tank.

Figure 1.4 Low Pressure Unit

Figure 1.5 High Pressure Unit

7 Electric Gas Booster

The gas booster is used to increase the pressure of the recovered gas from the Reprocessing Unit prior to returning it to the CO_2 scrubbers.

The design of the unit is such that the outlet pressure will always be correct for the working depth provided the control console is set correctly.

Figure 1.6 Electric Gas Booster

The standard booster is supplied with a 50 HP motor and can easily cope with 1 bell (2 divers) at any depth from 30 to 500 msw.

The Gas Booster Panel is factory set to accept an input voltage of 440 V. This input voltage may be set within the Control Box to 380, 400, 420, 460 or 480 V.

8 Gas Supply System

The entire gas supply is similar to that on a conventional open circuit dive system. Gas from the Gasmizer volume tank is supplied to the bell gas console at the required pressure. In addition, two independent standby gas supplies will be present at this panel, regulated to a pressure slightly below that of the recovery system. In the event of interruption of gas from the Gasmizer System, standby gas is automatically placed on-line. If this occurs, the supervisor is alerted by an audio or visual indicator located on the control console panel which indicates “no flow” in the Gasmizer System.

The remainder of the gas supply system is completely conventional. Gas passes down the bell umbilical to the supply manifold in the bell and from there to the diver.

The volume tank is a significant safety feature of the system since it introduces a delay between reprocessing and use of the gas by the diver. This allows monitoring of the breathing gas at an early stage such that intervention is possible in the event of a scrubber breakthrough or loss of make-up oxygen supply.

From the volume tank the gas is supplied to the conventional bell supply manifold in the dive control.

In case of malfunction or failure of any pressure gauge, valve or regulator in the Gasmizer System, the diver should be taken off the Gasmizer System and put on one of the back-up supply systems described above while repairs are undertaken.

Reclaim diving should not take place with pressure gauges isolated or regulators manually bypassed.

Figure 1.7 Volume Tank

9 Control Console

The control console allows the entire Electric Gasmizer system to be monitored and operated from dive control. It can be split into four separate sections.

1 THE BOOSTER PANEL gives a remote start/stop capability for the gas booster as well as indicator lights to show the Booster Status.

2 THE OXYGEN PANEL allows control of the make-up of metabolic oxygen i.e. replaces the oxygen which the diver uses.

3 THE CONTROL PANEL allows control of the back pressure in the exhaust umbilical.

4 THE MAKE-UP PANEL allows control of the pressure at which the make-up gas supply begins flowing to replenish any loss of gas in the system. It also contains a means of rapid oxygen injection for changing the gas mix.

WARNING

RAPID OXYGEN INJECTION MUST NOT BE CARRIED OUT WHILST DIVERS ARE USING THE SYSTEM.

Figure 1.8 Control Console

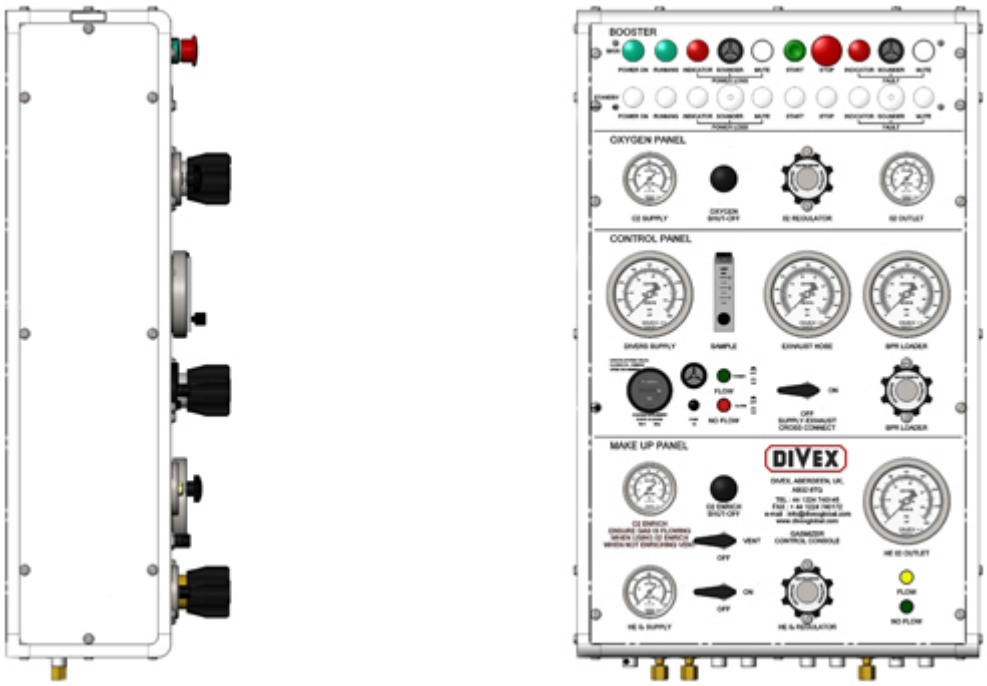

10 Safety and Gas Quality

Safety in diving operations is of the utmost importance. For a gas recovery system to be viable it must not increase the hazard to a diver but should increase safety due to:

1 Superior communications – no bubble noise.

2 Ability to scrub the bell from the surface.

3 Minimal effect if wrong gas mixture is placed on-line since make-up gas is diluted by the large quantity of gas in the volume tank.

The safety features of the Gasmizer system are reviewed in the following. This may be considered under three headings; the security of gas supply, the quality of the gas supplied and the safety of the exhaust system.

10.1 Security of Gas Supply

No alterations to conventional diver gas supply have been made. Thus standby gas is continuously available at the bell gas supply console and any interruption of gas from the recovery system will result in standby gas being substituted automatically. The dive supervisor is notified by means of an indicator detecting “no flow” through the Gasmizer System. Therefore the security of the gas supply is enhanced by the presence of the Gasmizer system.

10.2 Quality of Gas Supply

The quality of gas supplied by the Gasmizer system is maintained by:

1 The CO_2 scrubbers

2 The Purafil bed

3 O_2 make-up

4 Particle filtration

The volume tank plays an important role in assuring the quality of the gas supply. Changes in O_2/CO_2 levels will occur very slowly and will be evident to the dive supervisor well in advance of the gas being supplied to the diver. The gas booster being non-lubricated introduces virtually no contamination. Actual analysis shows the reprocessed gas meets the most stringent requirements.

The gas purification system also removes many biological contaminants. In particular we may note:

10.2.1 Particle Filtration

Down to 0.01 micron is sufficient to remove bacteria and various fungal organisms.

10.2.2 Purafil

Absorbs amines, mercaptans, ketones and ammonia, which are responsible for common body odours.

10.2.3 Exhaust System

For safe operation, the exhaust system has been designed such that under extreme fault conditions, the diver will not be exposed to significant negative pressure. There are several levels of protection within the Gasmizer system.

1.2.3.1 First Level

The Jewel Valve provides inherent reliability. The profile of the first stage nozzle and the resilience of the diaphragm make it difficult for foreign matter to stop it sealing. In addition a filter screen on the outlet to the first stage prevents foreign objects entering the first stage diaphragm chamber.

1.2.3.2 Second Level

The Jewel is a two stage valve with a second stage diaphragm spring controlling an interstage suction of 30 to 60 cm of H_2O between the first and second stage diaphragms.

1.2.3.3 Third Level

If a leak were to occur on the Jewel the demand regulator would see the leak as an inhalation and would flow sufficient gas to prevent depressurisation of the helmet.

1.2.3.4 Fourth Level

In the event of the diver losing his gas supply the SAECO valve will close off the exhaust.

1.2.3.5 Fifth Level

The diver at any time can close off the Jewel Valve by rotating the Jewel shut off valve 90°, the diver can now exhaust his gas to the sea through the Jewel open circuit valve assembly.

Intentionally blank

Chapter 2 - System Interconnections

Contents

Title **page**

1 General Description 2.2

2 System Installation 2.2

2.1 Prior to Installation 2.2

2.2 Equipment Installation and Interconnection 2.3

2.3 Commissioning 2.4

1 General Description

The schematics Schematics at page A.4 and page A.5 show the normal interconnecting pipe work and cabling between the various parts of the Electric Gasmizer system.

The exact fittings used will depend on the particular vessel in question but will be approved fittings in all cases.

Care should be taken to observe the piping sizes detailed on the interconnection schematics to maintain the minimum internal bore sizes as stated. Any reduction in pipe size / bore may adversely affect gas flow rates and the performance of the complete system at deeper or shallower depth extremes.

2 System Installation

2.1 Prior to Installation

A preliminary survey should be carried out prior to despatch of a system to answer the following questions:

1 Are the necessary services available?

- Remote Gas Panel, Power 220/240 Vac 50/60 Hz
- Reprocessing Unit, freshwater cooling, 3 gal/min (13 ltr/min) @ 32°C Max (90°F)
- Electric Gas Booster, power 380 - 460 V, 3 ph, 50/60 Hz, (37 kW), seawater or fresh water cooling 16 gal/min (72 ltr/min) @ 32°C Max (90°F)

2 Does the bell umbilical have a suitable exhaust hose? – Refer to Table 1 on page 4 for the exhaust hose diameter as a function of diving depth.

Note ***The exhaust hose must be suitable for at least 5 bar external pressure. Exhaust hoses are frequently damaged prior to fitting a Gasmizer system by closing the bell exhaust valve with the dive control exhaust valve open.***

Suitable locations for the Reprocessing Unit, Electric Gas Booster, Volume Tank, Remote Gas Panel, PLC Enclosure and Bell Equipment should also be identified during this preliminary survey.

2.1.1 Setting Transformer Input Voltage

The input voltage of the transformer on the gas booster panel is set to 440Vac by default and the output side provides 110Vac. If the supply voltage differs from 440V then the transformer voltage can be tapped to meet this supply voltage.

To set the correct supply voltage proceed as follows:

DANGER

LOCAL ELECTRICAL ISOLATION PROCEDURES MUST BE ADHERED TO AND ALL WORK CARRIED OUT BY SUITABLY QUALIFIED AND EXPERIENCED PERSONNEL.

1 Disconnect cable 2 from the 440 V terminal and connect to the input terminal corresponding with the supply voltage. Refer to Figure 2.1.

Figure 2.1 Input Voltage Selection

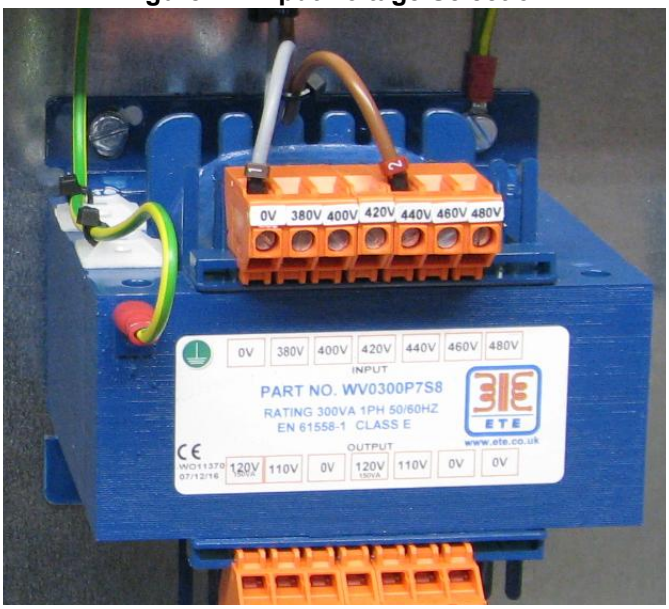

2.2 Equipment Installation and Interconnection

There are essentially five items of equipment to be accommodated.

2.2.1 Reprocessing Unit

Ideally should be sited in a compressor room or other machinery space.

2.2.2 Electric Gas Booster

Ideally should be sited close to the reprocessing unit for ease of installation and also to reduce pressure losses between the units.

2.2.3 Volume Tank

Siting is non-critical. It can be either beside the reprocessing unit or alternatively in the ship's gas storage area.

2.2.4 Bell Equipment

Should be mounted in the bell as close as possible to diver gas supply pressure gauge and shut-off valve. The bellman should have easy access to the water trap.

The system may be installed with rigid stainless or tungum pipework (apart from O_2 pipework which will be copper or tungum). Installations will be purged to remove all swarf, cuttings etc. and O_2 cleaned after installation.

2.2.5 Control Panel

This should be sited in the dive control room.

2.3 Commissioning

The following steps should be carried out after installation:

1 Pressurise system and check for leaks.

2 Carry out hydraulic/pneumatic pressure testing as required by client. It is recommended that the system be tested to its full working pressure.

Gas Supply System	Full working pressure 100 bar (1500 psi)
Gas Exhaust System	Full working pressure 68 bar (1000 psi)
O_2 System	Full working pressure 50 bar (725 psi)

3 Purge the system by pressurising with desired heliox mix to 10 bar and vent to atmospheric pressure. Connect O_2 supply to Reprocessing Unit by opening isolating valve.

4 Check that exhaust and supply umbilical as fitted comply with the table shown below for the proposed diving depth.

Table 1 Recommended Umbilical Sizes

	Depth Less than 200m	Depth Greater than 200m
Main Supply Umbilical	1/2”	3/4”
Main Exhaust Umbilical	5/8”	3/4”
Diver Supply Umbilical	3/8”	1/2”
Diver Exhaust Umbilical	1/2”	5/8”

1 If booster is inhibited carry out de-inhibiting procedures (see Chapter 6, Para 2.2).

2 Ensure that the booster is clean and remove all loose items – tools, cloths etc.

3 Remove belt guard and loosen the Jabsco water pump drive belt tension.

4 Remove the drive belt and tie securely to the frame away from the motor pulley.

5 Fill sump with the recommended lubricant (Chapter 6, Para 3.2).

6 Prime oil pump by removing oil filter and injecting oil through hole in the bearing housing whilst rotating the booster by hand in the REVERSE direction (about six full turns will suffice).

7 Replace filter.

8 Check alignment of motor and booster pulleys.

9 Check vee belt tension (Chapter 6, Para 3.4).

10 Ensure seawater or chiller supply is connected and turned on.

11 Start booster momentarily to ensure that motor is running in the direction indicated on casing. If this is not so, stop the booster IMMEDIATELY and reverse two of the incoming phases – ensure power is off at source whilst doing this. Re-start booster to ensure direction is now correct. Stop booster.

12 Refit Jabsco water pump drive belt and tension belt.

13 Connect suitable vacuum pump to exhaust umbilical and check that bell BPR loader system functions by monitoring the suction pressure gauge as the BPR loader is adjusted. If no vacuum pump is available this may be carried out by pressurising the bell on air to 40 ft.

14 Set up system for any specific depth according to (Chapter 8, Para 2.1) then use the cross connect on the Control Console to ensure correct operation of the system.

Intentionally blank

Chapter 3 - Bell Equipment

Contents

Title		page
1	General Description	3.2
2	SAECO Valve	3.4
3	Water Trap	3.6
4	Back Pressure Regulator	3.7
5	Diver Tracking System	3.8
6	Bell External Equipment	3.10
7	Bell Equipment Maintenance	3.11
8	Water Trap Inspection and Maintenance	3.11
9	SAECO Valve Adjustment	3.11
10	Relief Valve Adjustment	3.12
11	BPR Loader	3.12

1 General Description

The function of the Bell Equipment is to control the suction in the exhaust hose between the diver and the Bell. It also takes water from the Exhaust Hose at the Internal Water Trap and with the diver off recovery, provides an additional means of scrubbing the Bell atmosphere. Water in the main umbilical will show itself in the external Water Trap. Finally the SAECO valve which performs an important safety function, is housed within the bell equipment.

Bell Equipment

Figure 1 1 Diver (JFD Order Code: B1152H)

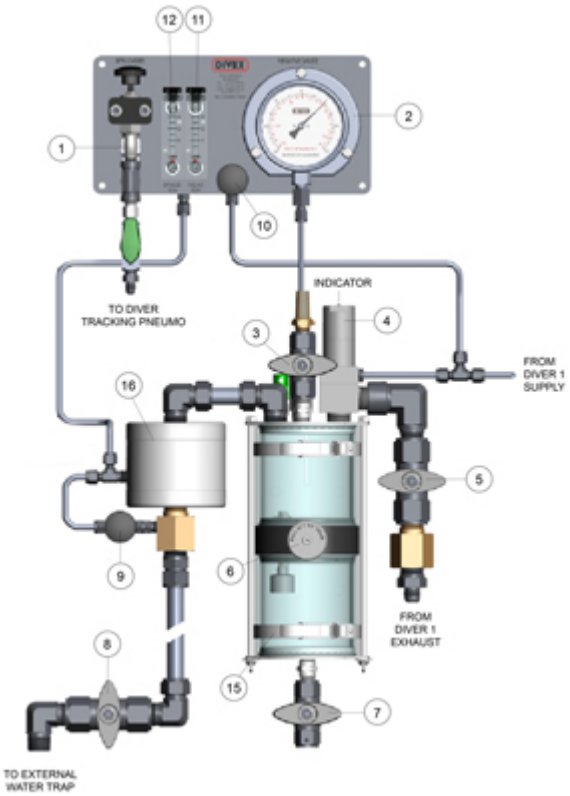

Figure 2 2 Diver (JFD Order Code: B1496A)

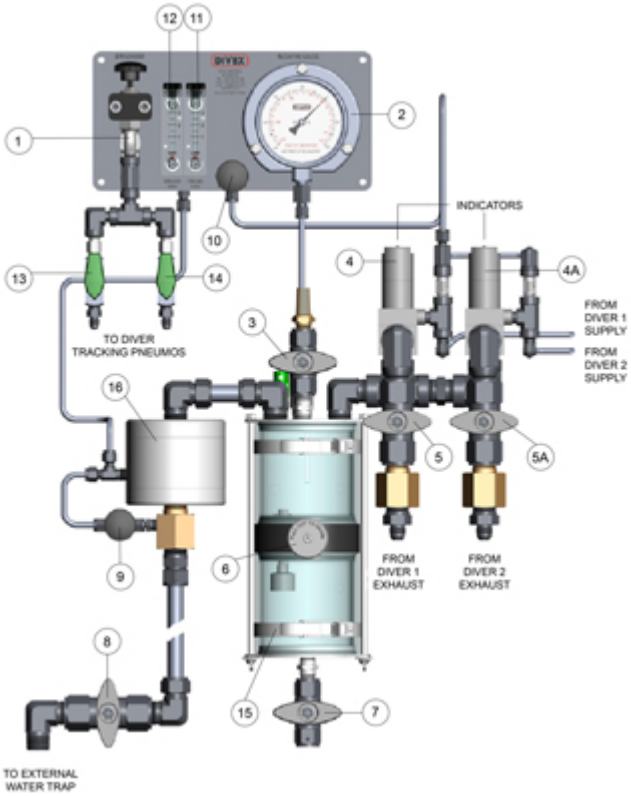

The overall layout of the bell equipment is shown above. The main components are as follows:

1 The back pressure regulator (BPR) loader valve – controls the setting of the back pressure regulator.

2 Pressure gauge – displays the pressure in the water trap, which is the same as the pressure in the exhaust umbilical if the isolating valve and SAECO valve are open.

3 Bell scrubbing valve – allows recovery and recycling of bell gas.

4 SAECO valve – (Supply Actuated Exhaust Cut-Off Valve) - isolates the exhaust umbilical from negative pressure in the event of a gas supply failure.

5 Exhaust umbilical isolating valve (Diver 1).

6 Exhaust umbilical isolating valve (Diver 2).

7 Water Trap Isolation Valve.

8 Water trap drain valve – allows the removal of water from the water trap.

9 Diver Exhaust Valve.

10 Metering valve 2 – BPR bleed valve associated with the diver tracking system.

11 Metering valve 1 – associated with the diver tracking system.

12 Flow meter 1.

13 Flow Meter 2.

14 Diver 1 Diver Exhaust Manifold Valve.

15 Diver 2 Diver Exhaust Manifold Valve.

16 Water trap – collects any water present in the exhaust umbilical.

17 Back Pressure regulator (BPR) – regulates the pressure in the exhaust umbilical.

Gas from the diver exhaust umbilical first enters the exhaust manifold. An inward relieving relief valve set to lift at 3.5 bar (50 psi) is provided on the umbilical connection to avoid damage to either the umbilical or the diver equipment if the bell is pressurised with an umbilical and the diver head gear connected.

Gas then passes through a SAECO valve into the water trap. The function of the SAECO valve is to isolate the diver umbilical from the negative pressure automatically in the event of any interruption in the gas supply.

From the water trap, gas passes through a back pressure regulator, the purpose of which is to control the negative pressure in the diver umbilical to the optimum value, giving minimum breathing resistance. Note that this back pressure regulator may be automatically adjusted by the diver tracking system if used to maintain the optimum exhaust pressure as the diver changes depth. Thus, diver depth is sensed by a diver tracking pneumo, which is continuously purged by a slow bleed of gas. In this way, the BPR loader valve can maintain the Back Pressure Regulator at a fixed pressure below diver ambient rather than bell depth. The JFD Ultrajewel 601 helmet does not require the use of the Diver Tracking System.

From the back pressure regulator, gas passes through the hull stops and check valve to the external water trap. Each of these components is described in more detail in the following sections.

The supply system is completely conventional. The only modification to the existing supply manifold is the addition of a connection required for the diver tracking system and SAECO valve which will be described later.

2 SAECO Valve

The Supply Actuated Exhaust Cut-off (SAECO) Valve is a safety device which closes off the exhaust suction from the diver if his breathing gas supply pressure drops below a pre-determined value. Its function is illustrated by Figure 3.

In the open position, diver gas supply pressure exerts a greater force on the plunger body than the springs, so the valve is held open.

Figure 3 SAECO Valve Open

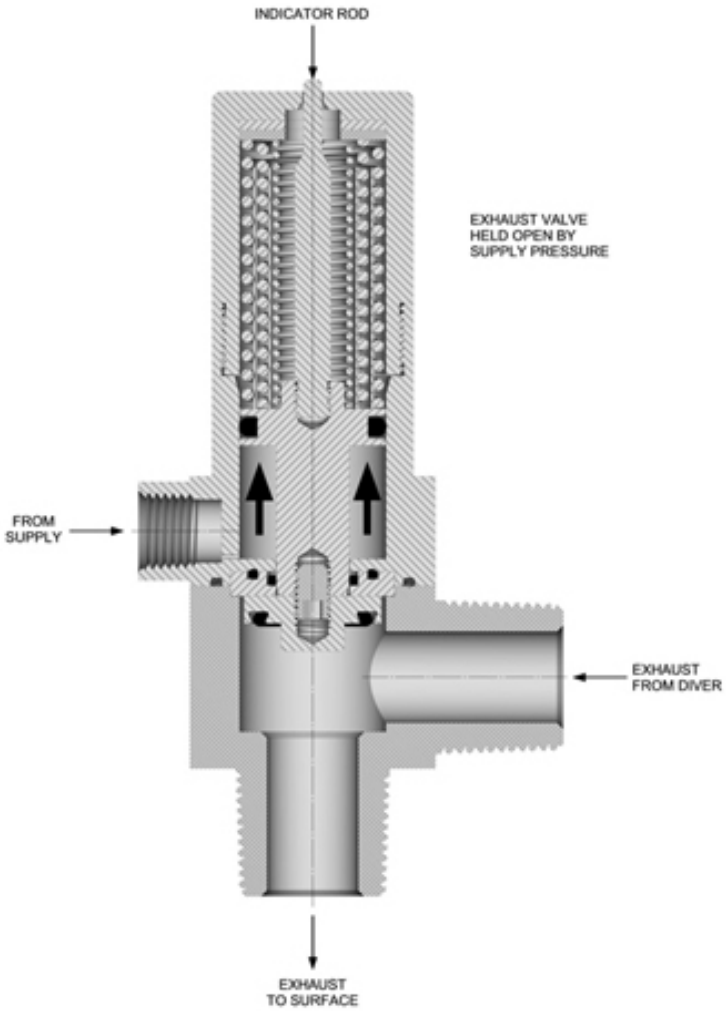

If the diver gas supply pressure falls below a predetermined value, the springs will force the piston closed. An indicator is provided to show the status of the valve.

Figure 4 SAECO Valve Closed

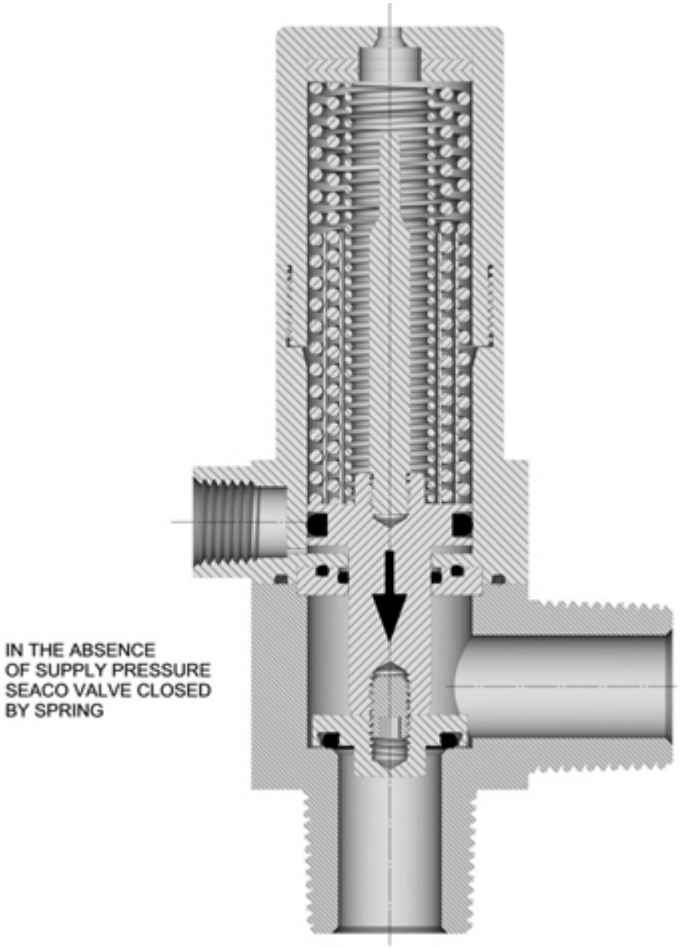

The SAECO valve should be adjusted so that it is fully closed when the gas supply pressure falls to 3.4 bar (50 psi) when bench tested on the surface. In practice the SAECO valve will close fully at higher supply pressures as a result of the negative pressure in the exhaust line. The adjustment procedure is described in para 9 on page 11.

Note ***The SAECO Valve Service Kit JFD order code is RK217.***

3 Water Trap

The function of the water trap is to collect any free water which may have entered the exhaust circuit. The water trap consists of an acrylic housing, a negative pressure gauge, overpressure relief valve, negative pressure relief valve, drain valve and isolating valve. The acrylic body should be mounted in a prominent position in the bell giving the bellman an unobstructed view. The isolation valve enables the lower part of the water trap to be isolated from the upper section and vented by one simple operation, allowing the water trap to be drained without interrupting gas recovery.

The function of this valve is described below:

With the plunger in the normal (in) position, trapped water may pass through to the lower cylinder.

When the isolation valve is pulled out, the upper and lower halves of the water trap are isolated and the lower half is vented to bell ambient pressure. The drain valve may now be opened to remove water while the upper half continues to collect water from the flowing gas.

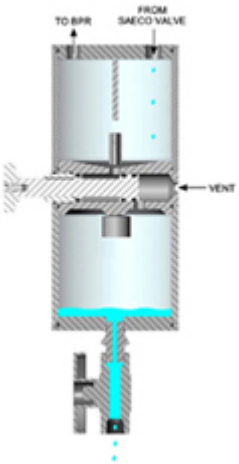

The negative pressure gauge indicates the pressure in both the water trap and the divers umbilical. The overpressure relief valve is set to lift at 30 psi (2 bar). Typically it would protect the water trap in the event that all valves were closed and the bell was being depressurised.

The negative pressure relief valve is set to lift at 3.5 bar (-50 psi). This could occur if the bell BPR was improperly loaded or the bell was being pressurised with valves to the water trap closed.

4 Back Pressure Regulator

The function of the back pressure regulator is to control the pressure in the diver's umbilical to give a minimum breathing resistance. Essentially, it consists of two slotted sealing faces enclosed by a rubber boot. This assembly is housed inside a sealed pressure chamber into which a reference pressure may be applied. The operation of the system is described below.

Initially, suction is applied to the discharge side of the regulator and a reference pressure to the chamber. If the pressure at the inlet side is below the reference pressure, the rubber boot will be held in place by the pressure and no flow will occur.

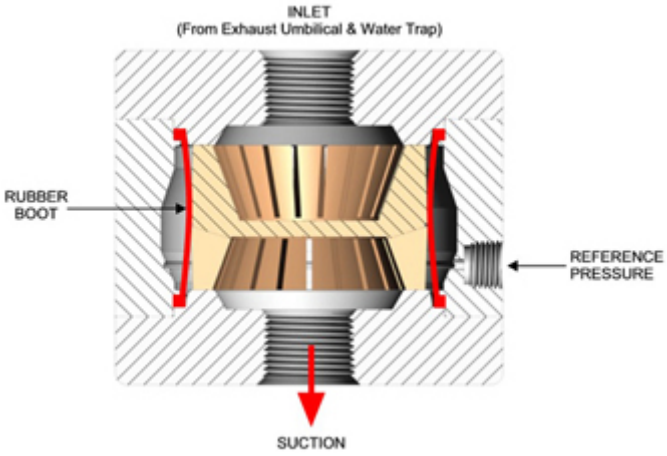

If the inlet pressure now rises fractionally above the reference pressure, the diaphragm will lift, allowing gas to flow. In this way pressure in the exhaust umbilical is held at a level equal to the reference pressure.

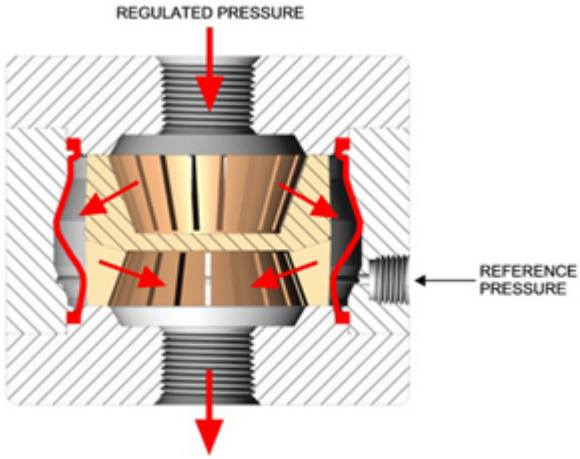

A further increase in gas flow will result in increased opening of the regulator as shown.

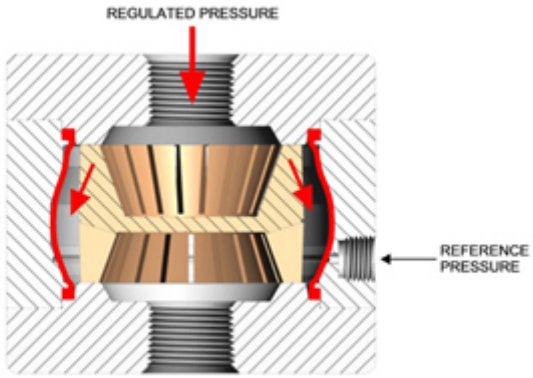

5 Diver Tracking System

In order to obtain minimum breathing resistance from the Reclaim Valve it is important to maintain the pressure in the return umbilical approximately 1-2 bar below diver ambient. Thus, as the diver moves above or below the bell, it is desirable to adjust the BPR loading accordingly. This is accomplished automatically by means of the diver tracking system. The system is shown schematically in the diagram below.

Figure 5 Diver Tracking System

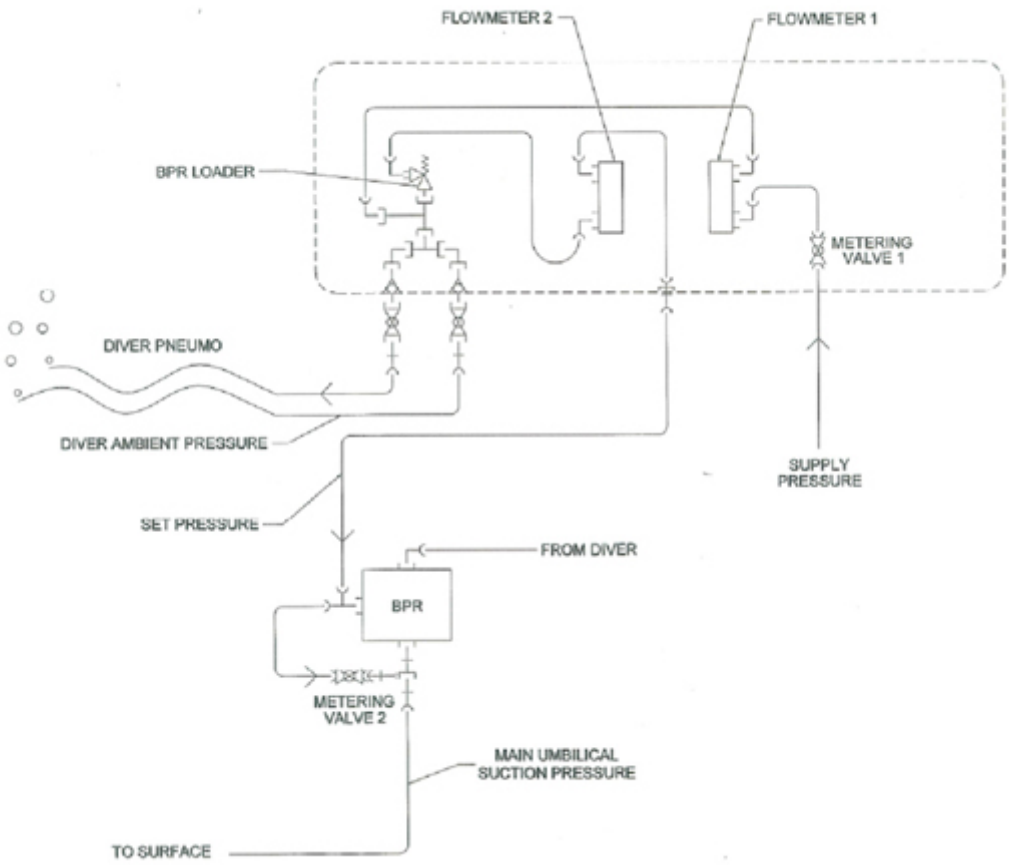

A 1/8th inch bore pneumo line is added to the diver umbilical. A slow gas bleed is drawn from the bell gas supply to this pneumo. Thus, gas bubbles will be seen to emerge continually from this line at a slow rate.

The loader is, in effect, a modified inward relieving relief valve which controls the set pressure for the BPR. As suction is first applied to the system, gas will be drawn from the BPR loader line, reducing the pressure until it reaches the set pressure of the loader when it will lift, allowing gas to flow to prevent further depressurisation. In this way, a fixed reference pressure is available for the BPR.

The pressure in the diver pneumo line is applied to a piston (having the same area as the valve opening) on the bottom of the BPR loader. As the diver changes depth, the change in pressure in the pneumo line will produce a force on this piston which will in effect change the set pressure of the loader e.g. as the diver goes deeper, an increased force will be produced causing the loader to relieve maintaining a lower pressure in the BPR loader line.

In fact, because of the design of the loader assembly, it maintains a constant difference in pressure between diver ambient and the BPR reference pressure. In this way once the BPR

loader has been set to give minimum breathing resistance in the Reclaim Valve, it will adjust the exhaust pressure automatically to compensate for changes in diver depth.

The functions of the diver tracking system components are:

- Diver pneumo — To monitor diver depth.
- Metering valve 1 — To adjust the supply gas to purge the diver pneumo - a maximum of 0.4 litre/min is recommended.
- Flowmeter 1 — Indicates the flow through metering valve 1.

Excessive flow will adversely affect gas recovery figures. Only a very small trickle of bubbles from the pneumo line should be evident to the diver.

- BPR loader — Maintains a constant pressure difference between diver ambient and BPR setting.
- Back Pressure Regulator — Controls the exhaust umbilical pressure to be equal to the BPR loader setting.
- Metering valve 2 — Controls the gas bleed through the BPR loader to give stable operation. Should be set to 0.5 litre/min.
- Flowmeter 2 — Records the flow through metering valve 2.

Note ***The JFD Ultrajewel 601 helmet does not require the use of the Diver Tracking System except on very large excursions where the suction pressure will exceed the operating limits of the Jewel Valve (0.5 to 5 bar). If no diver pneumo hose is in use, both diver pneumo valves should be in the open position to allow the BPR to track bell depth.***

6 Bell External Equipment

A check valve and water trap are mounted externally to the bell. The purpose of the check valve is to prevent reverse flow of gas from the umbilical into the bell equipment for example when the bell is being depressurised. The external water trap simply collects any additional free water, which is either carried over through the main water trap or condenses in the main umbilical exhaust hose. Little water is anticipated at this point however it should be drained before each dive when the bell is on the surface.

Figure 6 Water Trap

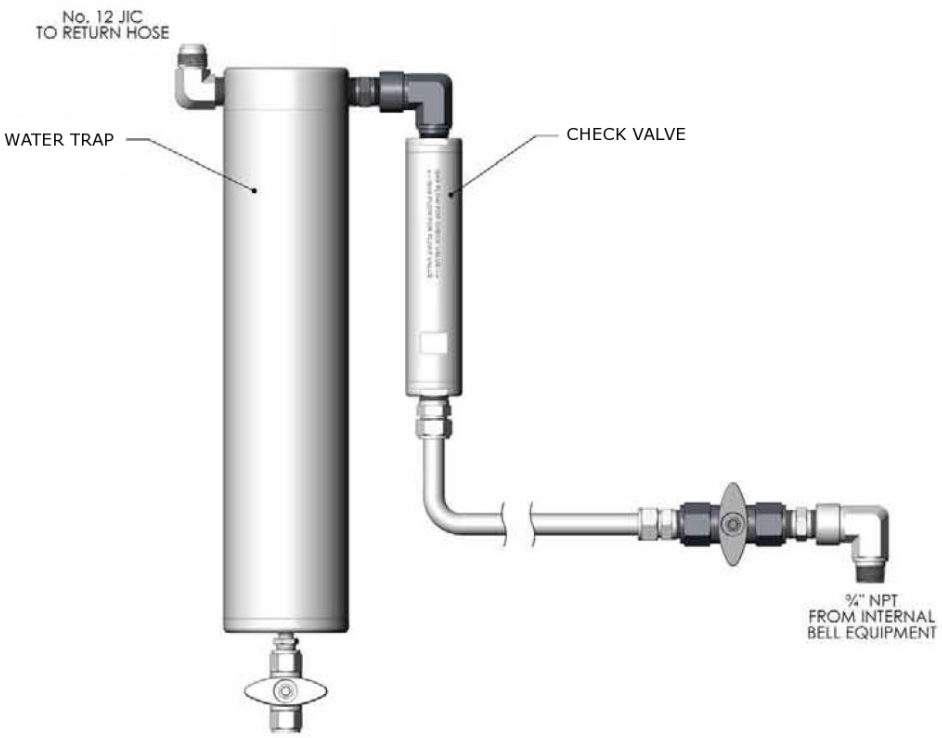

7 Bell Equipment Maintenance

The bell equipment requires only a limited amount of maintenance, which may be carried out at a convenient time when the bell is on surface and depressurised.

A maintenance schedule is shown below. Note in addition the following:

1 The bell internal water trap may be drained as required during a dive without interrupting gas recovery.

2 The bell external water trap should be drained EACH DIVE, BEFORE LEAVING THE SURFACE.

3 Over a period of time the acrylic housing of the bell internal water trap and the flow meters will become discoloured. This may be removed by washing in water with detergent.

Bell Equipment Maintenance Schedule	
Every 500 Hours	Next Due_____Hrs.
Dismantle, clean and inspect water trap (section 8).	
Every 3 Months	Next Due_____Hrs.
Check operation of SAECO valve and bell equipment relief valves (section 9 and section 10).	

8 Water Trap Inspection and Maintenance

The water trap should be dismantled and the condition of the o-rings on the plunger checked and renewed if necessary. The interior of the water trap should be cleaned with fresh water and detergent.

Similarly, any discolouration of the BPR flow meter may be removed by rinsing in fresh water.

9 SAECO Valve Adjustment

Check the setting of the SAECO valve. This may be done without removing the valve from the water trap assembly, by monitoring the diver supply gas pressure in the bell while carrying out the following checks.

1 Increase the supply pressure to 50 psi. At this pressure, the valve should remain closed (that is, the indicating plunger should be down).

2 Increase the supply pressure to 90 psi. The valve should now be fully open (indicator rod emerging from the top of the valve housing).

3 Reduce supply pressure to 50 psi. Valve should again be closed.

10 Relief Valve Adjustment

Remove each relief valve from the system and check their function by connecting directly to a suitable gas supply. Valves should be set as follows:

- Umbilical relief Inward relieving valve at 3.5 bar (50 psi)
- Water trap over Pressure relief valve Outward relieving 2 bar (30 psi)
- Water trap negative Pressure relief valve Inward relieving 3.5 bar (50 psi)

11 BPR Loader

The BPR loader requires little or no maintenance. In the event of malfunction it should be returned to the factory for repair.

If the site repair is essential, the following procedure should be followed. Refer to "Back Pressure Regulator (B.P.R.) Assembly B81221S1" in Appendix A page 16.

1 Using a 22 mm spanner, remove the top cap from the loader assembly.

2 Remove the button (11) and springs (4 & 13), noting the position and orientation of the button.

3 Disconnect diver tracking pneumo, flowmeter connection and T piece from bottom port.

4 Using straight blade screwdriver top and bottom, unscrew the bottom piston (12) from the valve cone (3). This may require some force since it is sealed with “Loctite”.

5 The o-rings may now be inspected and lubricated.

6 Re-assembly is a reversal of this procedure but note the following:

- The bottom piston must be locked into valve cone with a suitable compound such as “Loctite 222”.
- Ensure that the button (11) is correctly fitted.
- The top cap must be sealed to the valve body with Loctite 567.

Chapter 4 - Reprocessing Unit

Contents

Title **page**

1 General Description 4.2
- 1.1 The Inlet Section 4.2
- 1.2 The Outlet Section 4.2

2 Inlet Section 4.2
- 2.1 Filters/Moisture Separators 4.3
- 2.2 Float Valve 4.3
- 2.3 Oxygen Injection System 4.3
- 2.4 Flow Switch 4.4
- 2.5 Back Pressure Regulator 4.4

3 Outlet Section 4.4
- 3.1 Scrubbers 4.5

4 Reprocessing Unit – Routine Maintenance 4.6
- 4.1 As Required Maintenance 4.6
- 4.2 Maintenance Schedule 4.6

1 General Description

The function of the Reprocessing Unit is to add oxygen to restore the gas mixture then scrub the recovered gas to remove CO_2 and other contaminants. Its operation can be broken down into two sections.

1.1 The Inlet Section

The inlet section consists of a moisture separator and float valve to prevent water being passed into the reprocessing unit, an oxygen injection point and two receivers which primarily smooth out fluctuations in the flow to the Electrical Gas Booster.

1.2 The Outlet Section

The outlet section gas is discharged to this section from the Electric Gas Booster outlet. It consists of further filtration to remove water particles and any other solid material. Chemical scrubbing is also employed to remove carbon dioxide and other trace contaminants.

The operation and layout of each of these sections is described in the following.

2 Inlet Section

Figure 1 Inlet Section

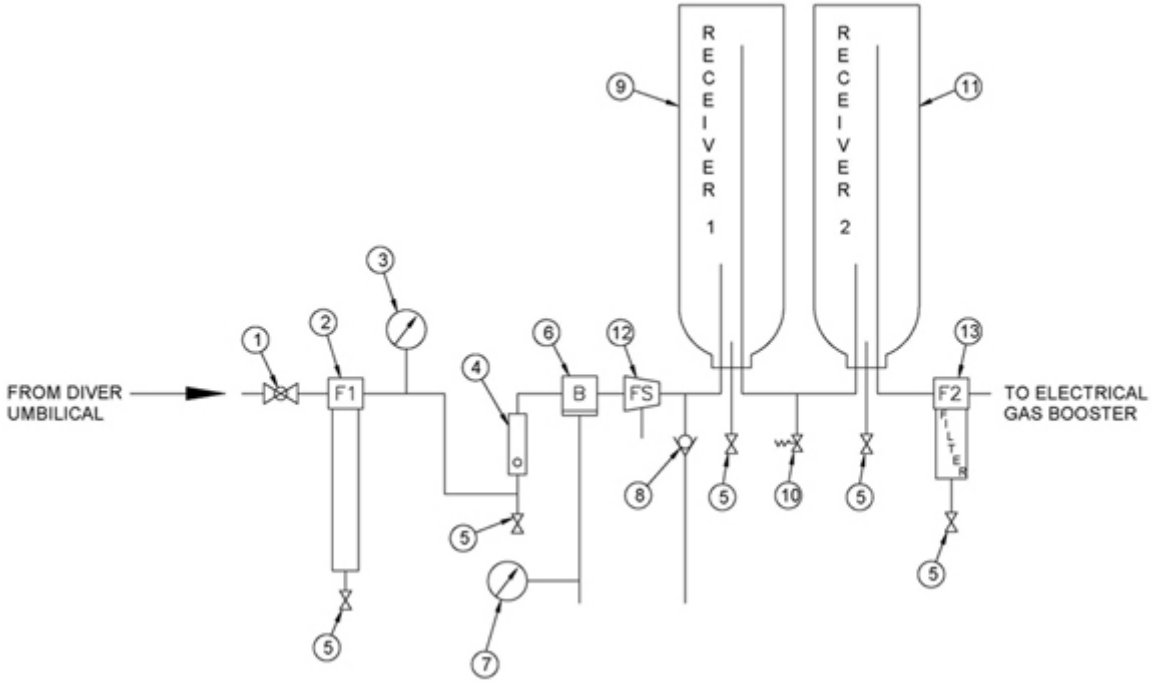

1 Exhaust hose ball valve – isolates the system from the exhaust umbilical.

2 Moisture separator F1 – removes liquid and solid particles down to 1 micron.

3 Exhaust hose pressure gauge – monitors pressure in the return umbilical.

4 Float valve – closes if water enters, preventing contamination of the Reprocessing Unit.

5 Drain valve – provided on moisture separator and float valve.

6 Back pressure regulator – controls the pressure in the main umbilical, eliminating any possibility of umbilical collapse.

7 BPR loader gauge – indicates the reference pressure applied to the back pressure regulator.

8 Oxygen injection – supplies an oxygen bleed from the control panel entering the system via a check valve prior to gas entering the first receiver.

9 Receiver 1 – prevents exhaust side pulsation resulting from compressor operation and allows O_2/helium mixing to take place.

10 Relief valve – provides overpressure protection. It is set to lift at 1100 psi.

11 Receiver 2 – as receiver 1.

12 Flow switch – detects flow through the unit, indicating at the control panel when the flow stops and controls oxygen make up.

13 Filter F2 – removes liquid and solid particles down to 0.01 micron.

The function of the main components is considered in more detail in the following.

2.1 Filters/Moisture Separators

Both Moisture Separator 1 and Filter 2 have a coalescing filter element. The elements for these filters are:

- Filter 1 1 micron -: “AO”
- Filter 2 0.01 micron -: “AA”

These filter elements coalesce the small liquid droplets into larger liquid droplets which drain to the bottom of the housing. It is recommended that filter elements be replaced at intervals of 500 operating hours.

2.2 Float Valve

The operation of the float valve may be seen in "Float / Check Valve Assembly P180581306S1" in Appendix A page 26. If water accumulates in the float valve body, the float will rise to seal off the outlet, preventing water from flooding the topside unit. This would occur if, for example, there was a loose fitting on the main umbilical at the bell. A drain valve allows any accumulated water to be removed.

2.3 Oxygen Injection System

Oxygen is bled into Receiver 1 directly from the oxygen panel. Details of the oxygen system are described in Chapter 5, Para 3.

2.4 Flow Switch

The flow switch senses the gas flow through the system. This switch controls two functions. First, it activates an indicator in the control panel when flow through the topside unit stops. In addition it stops oxygen addition in the absence of flow (Chapter 5, Para 3).

2.5 Back Pressure Regulator

Controls the pressure in the main return umbilical (see Chapter 3, Para 4 for a more detailed description).

3 Outlet Section

Figure 2 Outlet Section

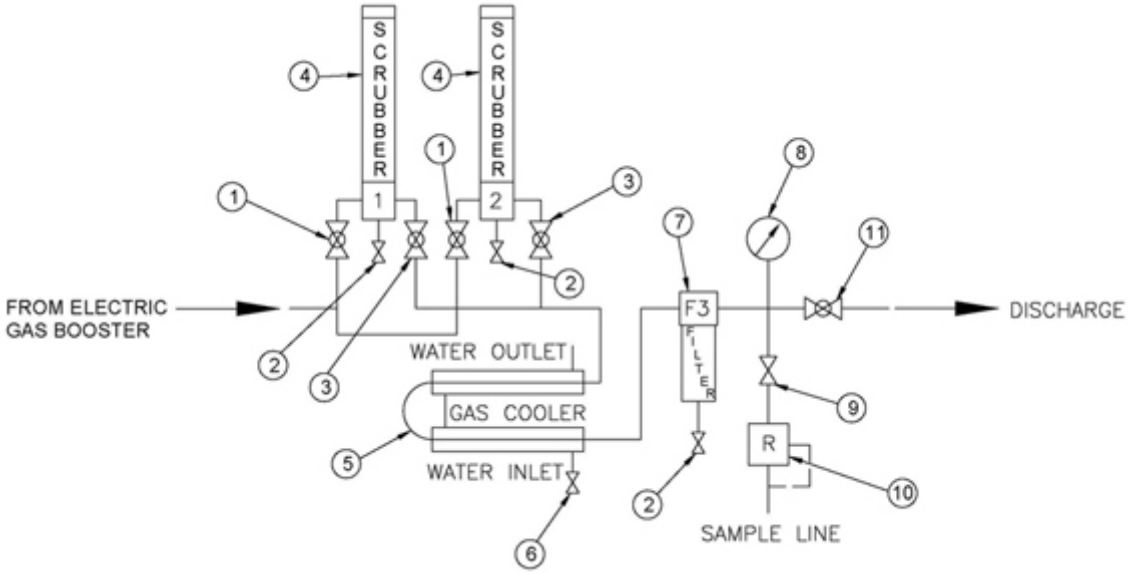

The outlet section consists of the following components:

1 Scrubber inlet valves – provide manual shut-off of the scrubber unit.

2 Scrubber/filter vent value – provides manual venting of the scrubber or filter prior to changing.

3 Scrubber outlet valve – provides manual shut-off of the scrubber outlet.

4 Scrubber assembly – removes CO_2 and odours by passing the gas through a bed of soda lime and Purafil.

5 Heat exchanger – cools the exhaust gas to condense water vapour.

6 Cooling water inlet valve – provides manual shut-off of cooling water to the heat exchanger.

7 Filter F3 – 1 micron coalescing filter which collects moisture condensed in the heat exchanger.

8 Diver supply pressure gauge – indicates the pressure of gas leaving the topside unit.

9 Sample regulator shut-off valve – isolates sample regulator.

10 Sample regulator – provides gas to analysers at 2 psi.

11 The diver supply valve – provides manual shut-off of the gas supply from the Reprocessing Unit.

The following describes the main components in more detail.

3.1 Scrubbers

The scrubber units consist of a deep bed of soda lime and Purafil. Soda lime is a widely used absorbent for carbon dioxide. Purafil is effective in removing odours and a wide range of trace contaminants. These contaminants could originate from the diver himself or from off gassing from the umbilical.

Purafil is effective in removing:

- Mercaptans, amines and ketones (responsible for many common odours)
- Ammonia
- Hydrogen sulphide
- Sulphur dioxide
- Carbon monoxide (trace quantities only)

This degree of scrubbing has been found satisfactory in normal diving applications. For other applications, particularly the recovery of the welder diver gas, consult JFD for recommended scrubbing systems.

4 Reprocessing Unit – Routine Maintenance

4.1 As Required Maintenance

Scrubber change-over / replenishment is based on CO_2 levels, this in turn is dictated by number of divers, work rate, etc. The in-service scrubber must be changed over and the out of service scrubber replenished before CO_2 readings exceed local acceptable limits.

WARNING

CO_2 LEVELS MUST BE CONTINUOUSLY MONITORED AND SCRUBBER CHANGED AS REQUIRED.

4.2 Maintenance Schedule

All routine maintenance is based on actual running time as indicated on the hour meter in the control console.

Every 4 Hours	Next Due_____Hrs.
DRAIN ALL REPROCESSING UNIT FILTERS. F2 SHOULD CONTAIN LESS THAN A TABLESPOON OF WATER. F1 and F3 should contain about a cup of condensate.	
Every 40 Hours	Next Due_____Hrs.
CHECK ALL PROCESSING UNIT DRAIN VALVES, Filters F1 – F2, F3, Receivers R1-R2, Scrubbers S1-S2 and Float valve.	
Every 500 Hours	Next Due_____Hrs.
REPLACE CO_2 SCRUBBER FILTER PADS on top and bottom of scrubber canisters.	
REPLACE FILTER ELEMENTS F1, F2 & F3	

Chapter 5 - Control Console

Contents

Title **page**

1 General Description 5.2
2 Booster Panel 5.3
3 Oxygen Panel 5.4
4 Control Panel 5.5
5 Make-Up Panel 5.7
6 Control Panel Maintenance 5.9
6.1 Maintenance Schedule 5.9
6.2 BPR Loader Regulator & O2 Regulator – Maintenance & Repair 5.9
6.3 Recommended Tools 5.9
6.4 Vent Valve Adjustment (BPR Loader Regulator only) 5.9
6.5 Routine Servicing 5.10
6.6 Dis-assembly 5.10
6.7 Assembly 5.10
6.8 Adjusting Screw & Spring Cap Inspection & Replacement 5.10
6.9 Sensor Dismantling & Re-assembly 5.11
6.10 Main Valve Dis-assembly & Re-assembly 5.11

1 General Description

The function of the Control Console is to run the system and monitor the gas flows and analysis. It controls the injection of metabolic oxygen, make-up of gas and flow of gas via the BPR. It also provides monitoring and control of the Electric Gas Booster, and records the hours run by the system on reclaim. It can conveniently be described in four parts.

- Booster panel
- Oxygen panel
- Control panel
- Make-up panel.

The control console is located in dive control where space allows, but it should be borne in mind when positioning it that reasonable access will be required to the unit. A variant is available that has been designed to fit a 19” RETMA rack such that it can be installed in the dive panel.

2 Booster Panel

The function of the booster panel is to monitor and control the operation of the electric gas booster.

Figure 1 Booster Panel

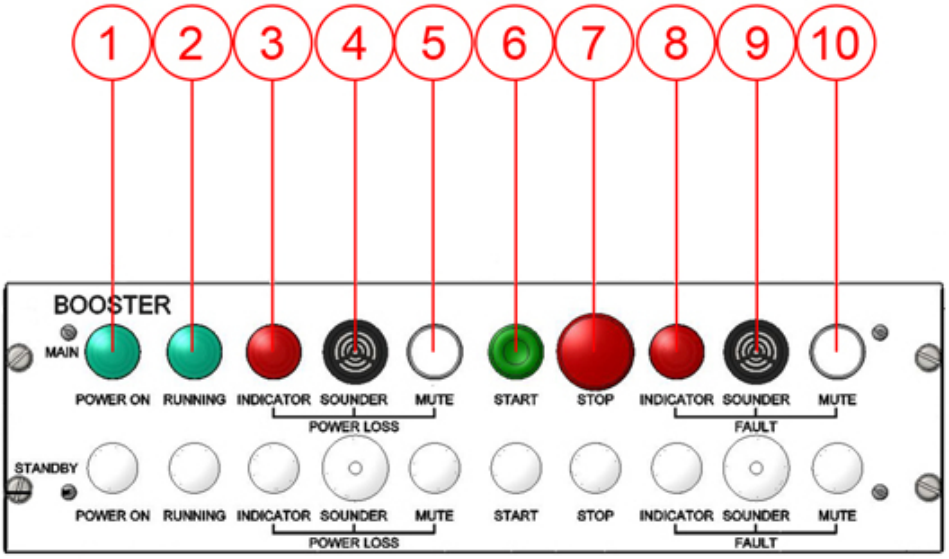

The components of the booster panel are:

1 Power on indicator light

2 Running indicator light

3 Power loss indicator light

4 Power loss sounder

5 Power loss sounder mute

6 Start push button switch

7 Stop push button switch

8 Fault indicator light

9 Fault sounder

10 Fault sounder mute

A second set of controls can be added for an optional stand-by booster.

3 Oxygen Panel

The function of the oxygen panel is to monitor and control the flow of the make-up oxygen into the system. The front panel layout is shown below.

Figure 2 Oxygen Panel

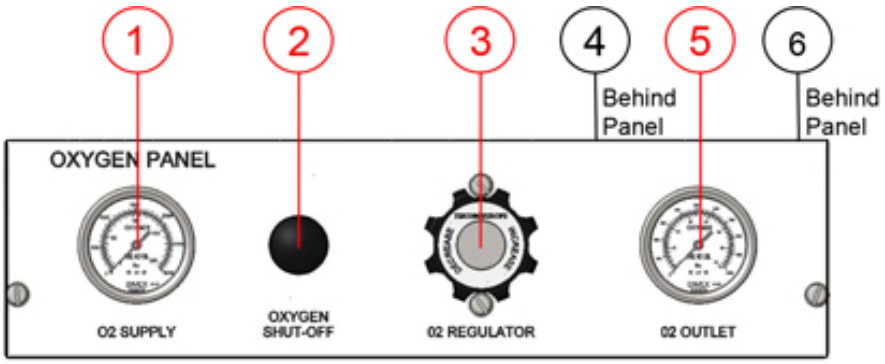

Oxygen from storage enters the panel via the O_2 supply gauge and shut-off valve. Oxygen flow is controlled by setting the pressure drop across a fixed, multi orifice restrictor (800H) such that constant bleed of oxygen into the system is supplied. Once set, O_2% in the reclaim sample is monitored and if the oxygen content is seen to be progressively increasing or decreasing, the regulator setting may be increased or decreased slightly to compensate.

The quantity of gas stored in the system is sufficiently large that changes in oxygen uptake by the diver, (perhaps due to varying levels of physical activity) influence the gas mixture so slowly that a negligible effect will be produced in the course of a dive.

A regulator is provided to control the pressure of oxygen supplied to the system. A solenoid valve stops the oxygen flow when the flow switch in the Reprocessing Unit indicates that the exhaust gas has stopped flowing. The O_2 outlet gauge indicates the oxygen pressure available to the O_2 orifice.

The components of the oxygen panel are:

1 O_2 supply gauge – indicates the oxygen pressure available to the system.

2 Oxygen shut-off valve – provides manual isolation of the oxygen supply.

3 O_2 regulator – controls the oxygen pressure to the O_2 orifice.

4 The O_2 solenoid – stops oxygen addition when gas flow through the system has stopped.

5 O_2 outlet gauge – monitors the oxygen pressure available to the O_2 orifice.

6 O_2 orifice – multi-orifice restrictor which regulates flow of oxygen to the Reprocessing Unit.

In operation, the oxygen shut-off valve is opened and oxygen regulator set as described in para Chapter 8, Para 2.

4 Control Panel

The purpose of the control panel is to monitor Gasmizer system operations during a dive. The front panel layout is shown below.

Figure 3 Schematic of Control Panel

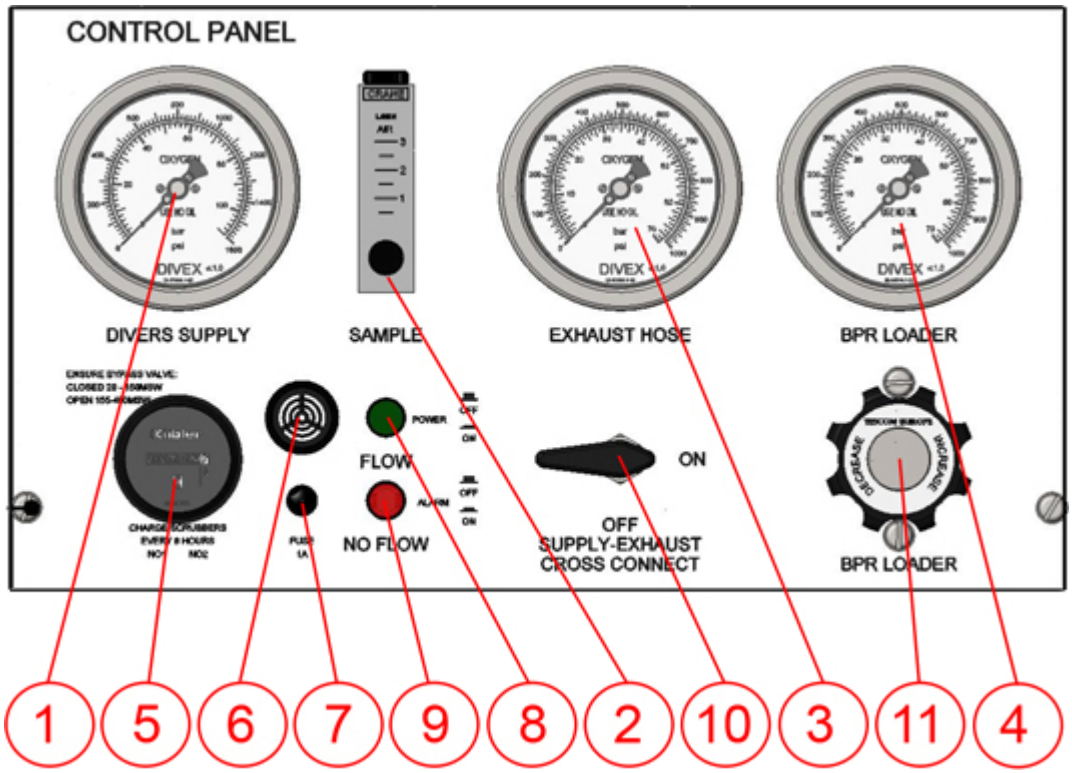

The major components are as follows:

1 Diver supply pressure gauge – indicates supply pressure available to the main umbilical.

2 Sample flow meter – monitors the sample gas flow to an external gas analyser.

3 Exhaust hose pressure gauge - indicates pressure in the main umbilical exhaust hose.

4 BPR loader pressure gauge – indicates the pressure set on the (surface) BPR loader.

5 Hour meter – indicates the elapsed time that the system has been running.

6 No flow sounder – sounds when gas flow stops.

7 Fuse holder – contains 3 amp fuses for protection of the 12 volt DC power system.

8 Power switch/flow light – when depressed, the 12 volt DC system is energised. When the green light is on, gas is flowing through the system.

9 Mute switch/no flow light – when the alarm switch is in the OUT position the alarm will sound if the gas flow stops. When the red light is ON, gas is not flowing through the system.

10 Supply exhaust cross connect valve – allows gas to flow directly from the supply to the exhaust side of the system during initial pressurisation or when changing gas mixes.

11 The BPR loader regulator – regulates the pressure set on the Reprocessing Unit back pressure regulator.

5 Make-Up Panel

The make-up gas panel (Figure 4) has two basic sections: the make-up gas section and the oxygen enriching section. The make-up gas section provides both gas to increase the working depth of the system and make-up for any losses either at surface or at the diver. The oxygen enriching section provides means of rapidly adding oxygen to the system at a much faster rate (300H) than the metabolic oxygen addition system. This is used when changing to a shallower depth or when a higher oxygen content is required.

Figure 4 Make-up Panel

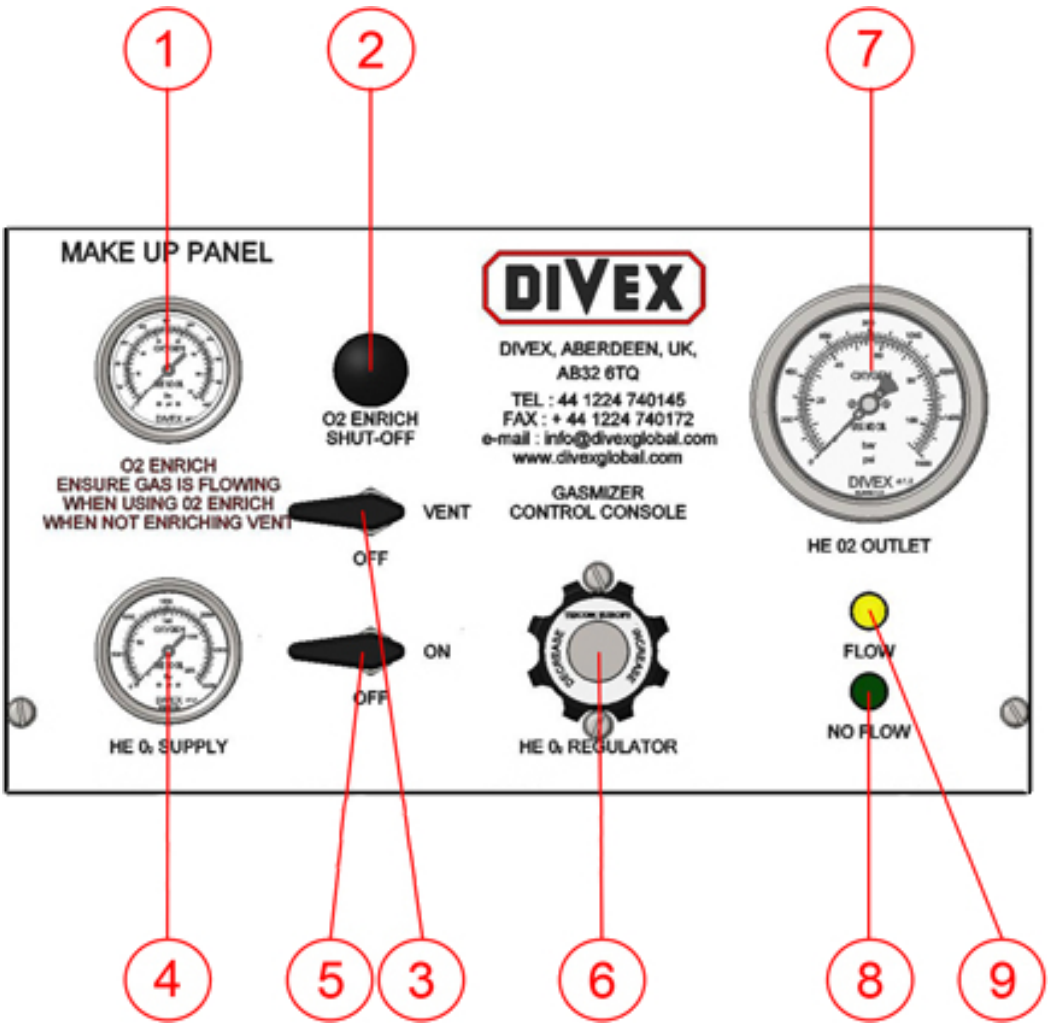

1 O_2 supply gauge – indicates oxygen pressure available to the panel.

Note ***This gas comes from the O_2 regulator on the oxygen panel.***

2 O_2 supply valve – provides manual shut-off of oxygen to the O_2 enriching orifice.

3 Vent valve – is normally open to prevent accidental addition of oxygen into the system.

4 The HeO_2 supply gauge – indicates the HeO_2 pressure available to the make-up system.

5 The HeO_2 supply valve – provides manual shut-off control of HeO_2 to the regulator.

6 The HeO_2 regulator – is a high flow, self venting regulator which controls the make-up gas pressure available to the volume tank.

7 The HeO_2 outlet gauge – indicates the pressure available to the volume tank. The reading on this gauge is the minimum volume tank pressure desired.

8 The HeO_2 make-up gas no flow light – indicates green when there is no flow through the make-up gas section.

9 The HeO_2 make-up gas flow light – indicates yellow when make-up gas is flowing into the volume tank.

Make-up oxygen is available from the oxygen regulator on the oxygen panel. Oxygen flows through a flow restrictor and check valve from the oxygen panel to the inlet receiver of the Reprocessing Unit.

WARNING

OXYGEN MAKE-UP SHOULD NEVER BE CARRIED OUT WHILE DIVING IS IN PROGRESS. THE SUPPLY-EXHAUST CROSS CONNECT SHOULD BE OPEN AND THE BOOSTER RUNNING TO PROVIDE CIRCULATION AND MIXING THROUGH THE SYSTEM (PARAGRAPH CHAPTER 8, PARA 4.6).

6 Control Panel Maintenance

6.1 Maintenance Schedule

The routine maintenance required on the control panel is:

Every 6 Months
Check calibration of all gauges.
Every Year (or as required)
Dismantle and service regulators (section 6.2).

6.2 BPR Loader Regulator & O_2 Regulator – Maintenance & Repair

BPR Loader Regulator - "Regulator, Pressure, 0 - 1500 psi 81321S1" in Appendix A page 47

O_2 Regulator - "O2 Regulator 0 - 800 psi 81320S1" in Appendix A page 46.

WARNING

IT IS ESSENTIAL THAT REGULATORS AND ASSOCIATED FITTINGS, PIPES ETC., ARE KEPT FREE OF HYDROCARBONS SUCH AS GREASES OR OIL DURING ASSEMBLY. THE ONLY LUBRICANTS WHICH MAY BE USED ARE CHRISTOLUBE MCG 111 OR OTHER SUITABLE NON HYDROCARBON GREASE. FOLLOWING MAINTENANCE, IT IS DESIRABLE TO OXYGEN CLEAN ALL REGULATORS.

6.3 Recommended Tools

The tools required for complete regulator dismantling are listed below:

- Screwdriver, 3/16” blade
- Screwdriver, 1/2” blade
- Spanner, 1 5/8” open end
- Spanner, 1/2” open end
- Spanner, 1/2” socket
- Pliers, circlip
- Pliers

The following summarises the various maintenance procedures possible.

6.4 Vent Valve Adjustment (BPR Loader Regulator only)

The vent valve is set at the factory during assembly and will not usually require adjustment. If adjustment is required, it may be carried out as follows:

1 With the regulator on line, remove the plug (18).

2 Load the regulator to a low pressure by screwing in the control knob.

3 Turn screw (19) clockwise until gas can be heard escaping through the relief valve, then turn back screw (19) until the gas flow stops.

6.5 Routine Servicing

Routine Servicing of these regulators consists of replacement of all o-rings, main valve seat and seal. This operation can be carried out with the regulators in the panel.

6.6 Dis-assembly

1 Isolate regulator inlet and outlet and remove from line.

2 Remove plug (18) with screwdriver.

3 Using circlip pliers, release the circlip (20) and remove the control knob (24).

4 With a 1-5/8" open ended spanner, remove the bonnet (11) by turning counter clockwise.

Note ***The spring (10) and vent rod (9) are released by this operation and care should be taken that they are not lost.***

5 Remove sensor assembly (1 to 8) with pliers if necessary.

6 Remove main valve assembly (29 to 37) with ½" socket spanner.

6.7 Assembly

Re-assembly of the major sub-assemblies is the reverse of the dis-assembly but note the following:

1 Sensor o-ring (4) should be located on sensor assembly.

2 The back-up ring (27) is necessary only on the O_2 regulator.

3 If any o-rings appear dry, lubricate lightly with Christolube MCG 111 or other suitable non-hydrocarbon lubricant.

4 Screw in valve assembly body (34) until it bottoms, hand tight only.

5 When assembling bonnet to body, put load spring (10) into bonnet (11) and insert relief valve rod (9) partially into hole in adjusting screw (22).

6.8 Adjusting Screw & Spring Cap Inspection & Replacement

If the adjusting screw (19) or spring cap (13) should need lubrication or replacement, the following procedure may be followed.

1 Refer to o-ring, seat and seal replacement, dis-assembly section 6.6, steps 1 through to 4.

2 Remove screw (23) and the adjusting screw assembly and thrust bearing will drop out.

3 Lubricate using Chrisolube MCG 111 compound and re-assemble, paying attention to para (5) of the assembly procedure in servicing, o-ring, seat and seal replacement.

6.9 Sensor Dismantling & Re-assembly

6.9.1 Dis-assembly

1 Unscrew spring pad (6) from sensor (1) using a 1/2” open end spanner or a vise jaw to hold spring pad (6) and a 1/2” wide screwdriver (or a 1” open end spanner depending upon sensor) to loosen sensor (1) and the sensor back up are then merely pushed apart.

2 To expose the vent valve (7) and spring (2), it is necessary to forcefully remove the vent valve seat (8) which quite possibly will cause permanent damage to this seat and require replacement. The removal can be made with any sharp pointed instrument.

6.9.2 Assembly

1 If sensor o-ring (4) requires lubricant, apply Christolube MCG 111 or other suitable non-hydrocarbon grease.

2 Re-assemble o-ring (4), back up ring (5), sensor backup (3) and sensor (1).

3 Hold both members in a vertical position and carefully thread spring pad (6) onto sensor (1) and tighten to a maximum torque loading of 75-90 ft. lbs.

6.10 Main Valve Dis-assembly & Re-assembly

6.10.1 Dis-assembly

1 Clamp valve body (34) in a smooth jawed vice or hold with pliers. Clamping is done on shoulders that hold the o-ring (32) and back-up ring (31). If pliers are used, a protecting cover should be placed over the jaws. Remove seat retainer (30) with 1/2” spanner (left-hand thread).

2 To remove the spring (36) and main valve (35), unscrew the filter assembly (37) from body (34). This is a finger tight engagement.

3 Remove seat (33) with a sharp pointed tool.

6.10.2 Re-assembly

1 Install new seat (33) in retainer (30) with chamfer of seat toward valve (35).

2 Fit seat retainer (30) and torque tighten to a recommended 100-110 in. lbs.

3 Refit valve spring (36) and filter assembly (37).

Table 1 Trouble Shooting

Fault	Possible Cause
The regulated pressure continues to increase after lock-up and without change in control knob position.	1. Valve seat (33) needs replacement. 2. Sensor assembly needs cleaning and seal replacement.
Continuous leaking through bonnet with outlet pressure on the regulator.	1. Vent valve needs adjustment. 2. Vent valve seat (8) needs replacement. 3. Sensor o-ring (4) worn and leaking.
Regulated pressure drops off sharply when flow is within regulator capabilities.	1. Check inlet filter (37) and clean if necessary. 2. Main valve seat (33) needs replacement.

Chapter 6 - Gas Booster

Contents

Title **page**

1 General Description 6.3
- 1.1 Technical Specification 6.5
- 1.2 Unloader Circuit 6.6
- 1.3 Freshwater Cooling Circuit 6.7
- 1.4 Safety Cut-Outs 6.7
- 1.5 Main Gas Circuit 6.8
- 1.6 Booster Starter Control Box 6.8

2 Storage 6.9
- 2.1 Inhibiting Procedures 6.9
- 2.2 De-inhibiting Procedures 6.10

3 Routine Maintenance & Fault Finding 6.11
- 3.1 Periodic Checks 6.11
- 3.2 Servicing Chart 6.11
- 3.3 Oil Pressure Adjustment 6.11
- 3.4 Belt Drive Tension Adjustment 6.11
- 3.5 Lubricating Oils 6.12
- 3.6 Fault Finding 6.12

4 Overhaul 6.15
- 4.1 Booster Assembly 6.15
- 4.2 First Stage Assembly - Cylinder Line 4-1/4” Diameter 6.21
- 4.3 Oil Wiper Packing Assembly 6.32
- 4.4 Concentric Type Combined Suction & Delivery Valve 6.33
- 4.5 Second Stage Assembly - Cylinder Line 2 5/8” Diameter 6.35
- 4.6 Gauge Panel 6.48
- 4.7 Cooler Assembly 6.49
- 4.8 Crankcase Assembly 6.51
- 4.9 Unloader Valve Assembly 6.66
- 4.10 Relief Valves 6.68
- 4.11 Cooling Water Pump 6.70

4.12 Cooling Water Heat Exchanger Seawater/Freshwater 6.72
4.13 By-Pass Valve Tescom Regulator 6.74
4.14 Pressure Control Valve 6.75
4.15 Solenoid Valves 6.76
4.16 Non-return Valve 6.77
4.17 Pneumatic Inlet Shut-off Valve 6.78
4.18 Gas Pressure Switches 6.81
4.19 High Gas Temperature Switch 6.82
4.20 Low Oil Pressure Switch 6.83
4.21 Electric Motor 6.84
5 Model K651 Service Spares Kits 6.87

1 General Description

The purpose of the Electric Gas Booster (Figure 1) is to take the exhaust gas from the Reprocessing Unit at pressures, which vary according to dive depth and compress it to the appropriate supply pressure for that depth.

Figure 1 Electric Gas Booster

The compression ratio of the plant falls as dive depth increases, therefore below a depth of 150 msw the first stage is no longer required and must be manually bypassed. Pressure switches ensure that the booster shuts down if this is not done.

Note ***At higher cooling water temperatures, both stages may be required for depths down to 180 msw to allow use of both intercoolers.***

Details of inlet and outlet pressure etc. can be found in Table 1 below.

Table 1 Booster Performance

Dive Depth (m)	Inlet Pressure Barg	Interstage Pressure Barg	Delivery Pressure Barg	Typical Plant Throughput - CFM	Compressor Flow Actual CFM	Notes
30	1	3.6	18.6	10.3	17.2	Both stages compressing
50	2.5	7.2	21.4	8.9	17.2	
100	7	16.5	28.2	7.1	17.2	
150	11.5	15.0	35.1	6.7	17.2	
200	16	16	42.0	6.4	6.6	Stage two only compressing. Stage one recirculating.
250	20.5	20.5	49.1	6.3	6.6	
300	25	25	56.8	6.2	6.6	
350	29.5	29.5	64.4	6.13	6.6	
400	34.5	34.5	72.0	6.0	6.6	
*450	39	39	79.6	6.0	6.6	
*500	44	44	87.3	6.0	6.6	
*Based on 2 divers at a heavy work rate (75 ltr/min RMV)						

1.1 Technical Specification

Description: Twin Cylinder, Two Stage, Oil Free, Watercooled Booster Compressor.		
Number of Cylinders		2
Bore	Stage 1	4 1/4” (108.0 mm)
	Stage 2	2 5/8” (66.7 mm)
Stroke		4” (101.6 mm)
Mains Cooling Water Flow		16.0 gallons/minute (72 litres/minute)
Direction of Rotation		Clockwise looking on flywheel
Lubrication		Force Feed from integral oil pump
Oil Pressure		50 psi (3.4 bar)
Sump Capacity		13 pints (7.4 litres)
Speed		70 RPM
Maximum Inspired Pressure (Stage 1)		250 psi (17.3 bar)
Maximum Inspired Pressure (Stage 2)		638 psi (44 bar)
Maximum Delivery Pressure		1450 psi (100 bar)
Maximum Compression Ratio		7:1 Max
Inlet		30 mm
Delivery		22 mm
Water Inlet		3/4” BSP
Water Outlet		3/4” BSP
Height		61” (1549 mm)
Width		30.75” (781 mm)
Length		33.75” (832 mm)
Weight		1140 lb (517 Kg)

1.2 Unloader Circuit

Figure 2 Unloader Circuit

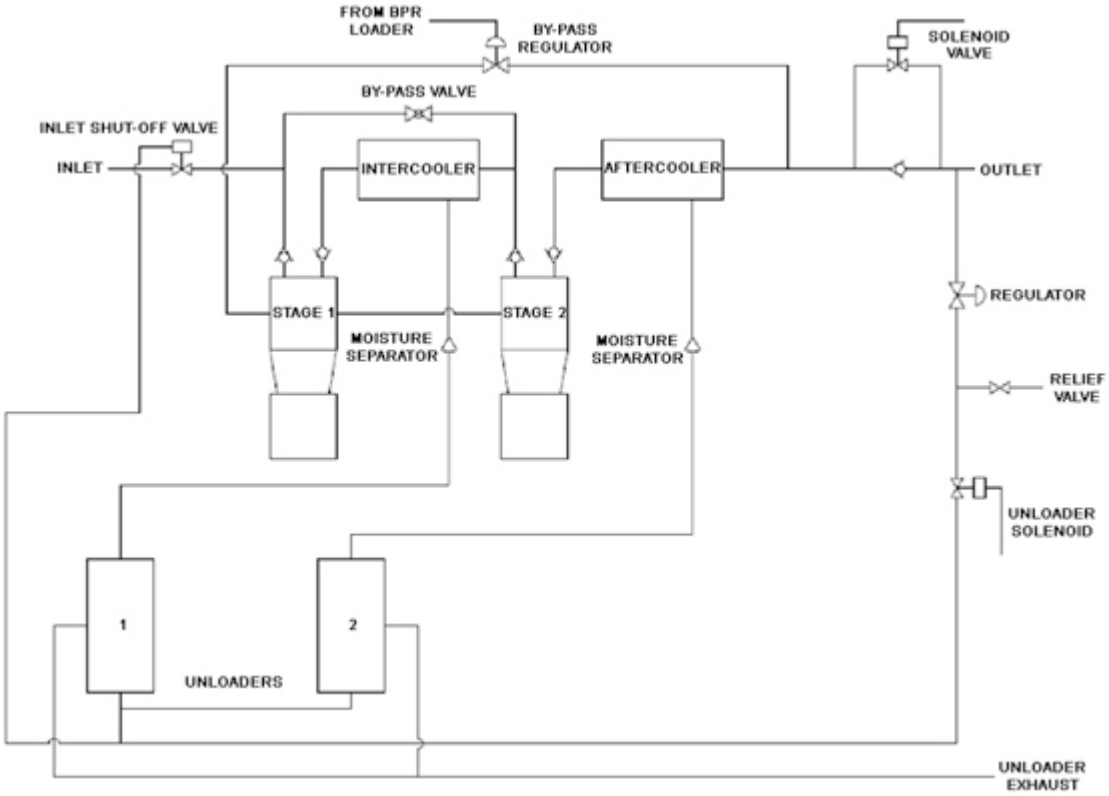

The unloader circuit (Figure 2) allows automatic dumping of any moisture which is condensed out of the gas by the inter cooler and after cooler. It also completely unloads the booster in the event of the booster being stopped.

These unloaders are pneumatically operated, the first stage being held closed by a regulated supply from the booster outlet and the second stage by the first stage unloader inlet line. This circuit is controlled by a timer operated solenoid valve which closes periodically allowing the unloaders to dump any moisture accumulated. This timer also waits 10 seconds after initial starting before closing the unloaders to allow this machine to accelerate off load.

In addition, when the booster is stopped and the solenoid valve closes, allowing the unloaders to dump the gas contained in both stages, a pneumatically actuated ball valve at the booster inlet closes off preventing any gas upstream from being lost.

1.3 Freshwater Cooling Circuit

Figure 3 Freshwater Cooling Circuit

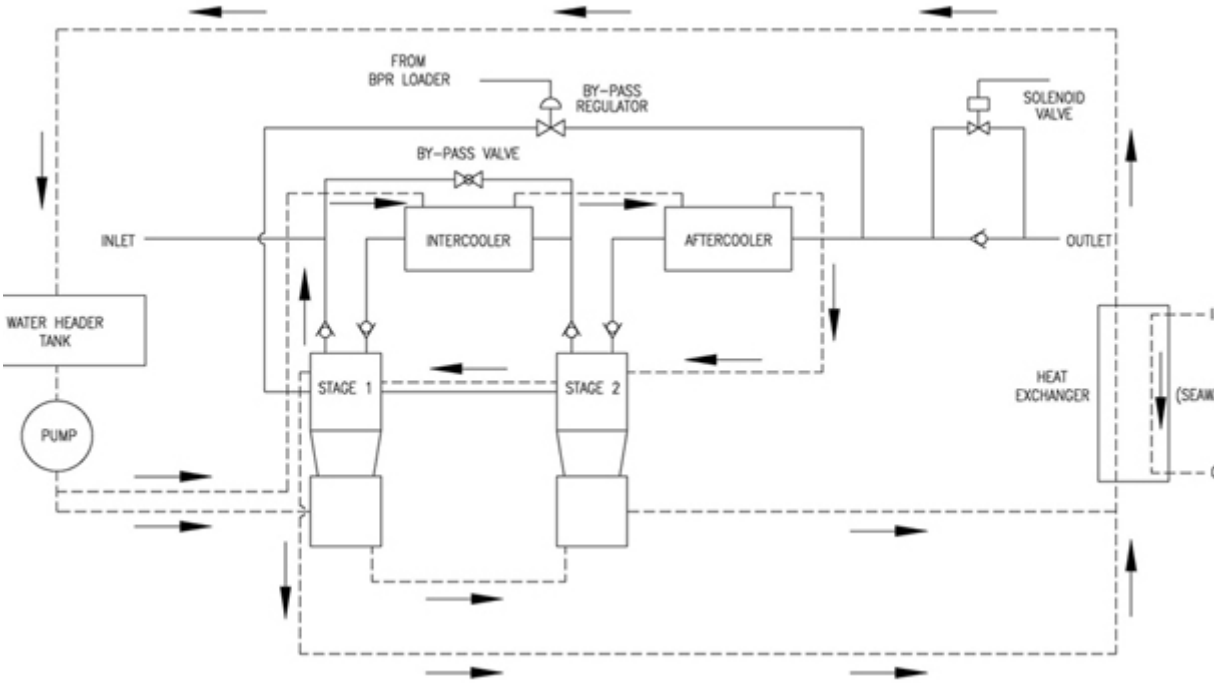

The gas is cooled after each stage by the inter cooler and after cooler respectively. These form part of the freshwater cooling circuit (Figure 3) which directly cools the booster itself. Heat is dissipated from this closed circuit by means of a seawater/freshwater heat exchanger. The pump for this circuit is driven directly from the motor.

1.4 Safety Cut-Outs

Temperature switches at the outlet of each stage shut down the booster if the gas temperature exceeds 200°C. High pressure cut outs and relief valves on each stage ensure pressure never exceeds 46 bar (inter stage) and 105 bar (final stage). A low inlet pressure cut out switch is fitted to prevent air being sucked into the system in the event of the inlet pressure dropping below 0.3 bar. There is also a pressure switch to stop the machine if the lubricating oil pressure falls below 1.72 bar.

1.5 Main Gas Circuit

Figure 4 Main Gas Circuit

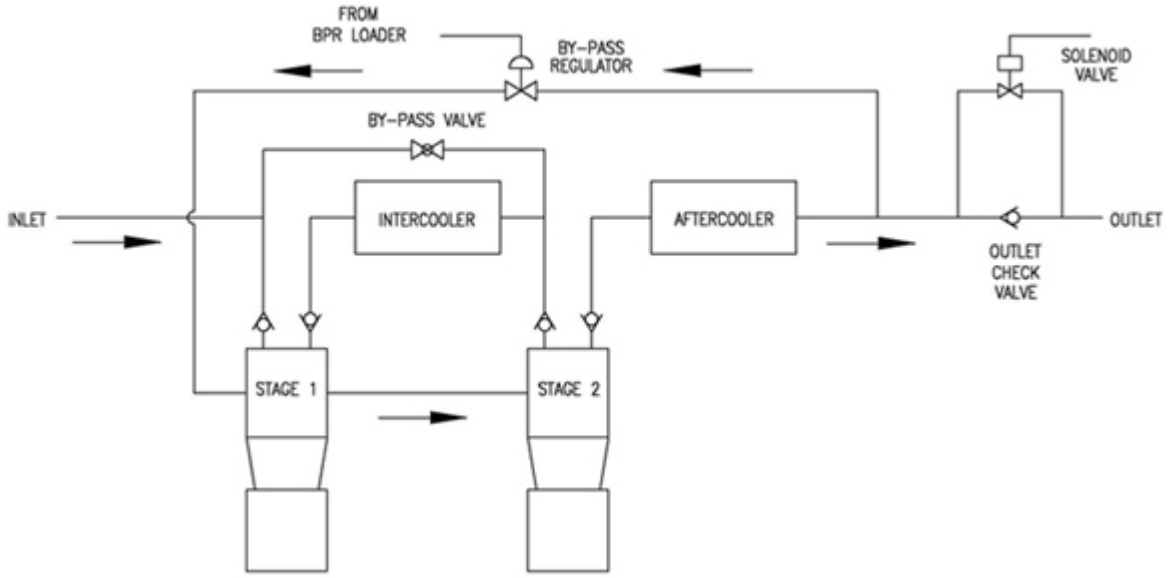

On initial start up the booster automatically charges itself with gas from the Volume Tank by opening a solenoid valve, which bypasses gas back past the outlet check valve. A dome-loaded regulator is connected between the machine outlet and inlet. Its outlet is set 1 bar below the BPR Loader pressure, hence the booster will circulate gas around this loop keeping itself in equilibrium and maintaining the system, after the Reprocessing Unit BPR, at a pressure 1 bar below the setting on the BPR loader in dive control.

When a diver goes onto recovery the recovered gas flows from the Reprocessing Unit to the booster inlet. Due to this additional gas, the flow from the bypass regulator is reduced as the booster compresses this additional gas and delivers it to the Volume Tank. Hence it can be seen that the plant can automatically compensate for any variation in the inlet flow rate due to a diver's work rate keeping itself in equilibrium.

1.6 Booster Starter Control Box

1 Motor Control - The motor control circuit has a local and remote selector switch, with local and remote emergency stop-lock and start switches and mains indicator lights. The motor is wired in a star-delta configuration, starting in a star connection and changing to delta connection after approximately 5 seconds. Upon starting the booster the running light illuminates and hours of running are recorded on an hour meter.

2 Moisture Dump/Unloaders - Upon starting the booster, a timer T1B sets the period that the booster runs unloaded and dumping moisture. T1B is pre-set, usually to 6 seconds (maximum 30 seconds). A second timer T2 sets the period between unloading during running. T1B additionally controls the initial period that the booster runs unloaded and dumping moisture.

2 Storage

The booster is normally supplied uninhibited. If there is likely to be a long delay between installation and commissioning (in excess of six months) it can be inhibited prior to delivery.

Consideration must also be given to this if the system is to be unused for a significant period (see Inhibiting Procedures section 2.1).

Inhibiting Oils (Always follow the oil suppliers instructions)	
Make	**Inhibiting Oil**
Shell	Ensis Oil 30
BP	Protective Engine Oil 30
Esso	Rustban 396
Di-inhibiting Procedures – see De-inhibiting Procedures (page 10).	

2.1 Inhibiting Procedures

Period (months)	**Anticipated Conditions**	**Procedure**
1-6	Normally Dry	Seal off all openings to booster with suitable tape.
6+	Normally Dry	1. Drain oil sump and refill with inhibiting oil. 2. Run machine or hand turn until all bearing surfaces are wet. 3. Seal off all openings with suitable tape.
Any Period	Damp or risk of condensation	1. Follow above procedures. 2. Envelope machine in heavy gauge polythene sheet sealed with a suitable tape. 3. Enclose a small quantity of desiccant material i.e. silica gel or alumina, within the plastic sheeting.

2.2 De-inhibiting Procedures

Period (months)	Procedure
1-6	1. Remove all sealing tape. 2. Follow initial starting procedure (see Commissioning).
6+	1. Run till warm. 2. Drain inhibiting oil from sump. 3. Refill with the correct lubricating oil.

3 Routine Maintenance & Fault Finding

3.1 Periodic Checks

At the intervals stated the servicing below should be carried out to ensure the long life of the booster.

3.2 Servicing Chart

Period	Operation
Daily	1. Check oil level. Refill if necessary with the recommended lubricant (section 3.5 - page 12). 2. Check level in header tank. Top up with 50/50 water/glycol if necessary.
Every 1000 Hours	Remove and service suction and delivery valves.
Every 2000 Hours	Check drive belt tension and adjust if necessary (section 3.4 - page 11).
Every 5000 Hours or annually (Whichever is sooner)	1. Drain sump and refill with the recommended lubricant (section 3.5 - page 12). 2. Clean or replace oil filter. 3. Carry out general overhaul (section 4 - page 15).

3.3 Oil Pressure Adjustment

1 Run compressor until the oil is warm and check oil pressure - it should be 50 psi (3.4 bar).

2 To adjust pressure release the locknut and turn the adjusting screw clockwise to increase pressure and anti clockwise to decrease pressure. Re-tighten locknut when adjustment is complete.

3.4 Belt Drive Tension Adjustment

1 Firmly press down on the belts with the hand halfway between the pulley centres. If the adjustment is correct it should deflect approximately 1 1/2” (38 mm).

2 If not correct loosen the motor holding down bolts and reposition the motor.

3 Ensure correct alignment of the pulleys. Re-tighten the bolts and re-check the tension, see "Belt Drive Tension Adjustment 81924S1" in Appendix A page 56.

3.5 Lubricating Oils

The appropriate lubricating oils are listed below.

- Shell Talpa 30
- Shell Turbo 78
- Petrofina Solco AC68
- Texaco Cepheus
- Esso Teresso L100
- Anderol 555

Other oils approved by JFD may be used.

All new Boosters leaving JFD will contain Anderol 555.

3.6 Fault Finding

Fault	Probable Cause	Solution
No oil pressure on initial start up (commissioning and after overhaul).	1. Wrong rotation.	Check rotation.
	2. Oil pump not primed.	Concentric pump, remove pump. Fill with oil and replace.
	3. Faulty pressure gauge.	Replace pressure gauge.
Low oil pressure.	1. Blocked oil suction filter.	Remove filter, clean and degrease.
	2. Air leakage into suction side of oil of pump i.e. suction filter cover, plug in base of housing or face gasket of main bearing housing.	Check for tightness of pipe fittings. Renew gasket.
	3. Faulty oil pressure relief valve.	Dismantle and examine spring, ball and seat. Renew components as necessary.
	4. Incorrect oil pressure relief valve setting.	Reset relief valve.
	5. Worn or damaged compressor bearings.	Fit new bearings.
	6. Faulty or worn oil pump.	Fit new pump.
	7. Sump needs refilling.	Replenish as necessary.
	8. Faulty pressure gauge.	Replace pressure gauge.
	9. Damaged internal oil suction pipe or slack union.	Remove crankcase side cover and check for damage and tightness.

Fault	Probable Cause	Solution
Inability to maintain normal output.	1. Blocked inlet filter.	Service in accordance with details given on instruction plate attached to the suction filter/silencer unit.
	2. Belt slip.	Re-adjust belt.
	3. Pressure control setting incorrect.	Reset pressure control.
	4. Faulty suction or delivery valves.	Remove and dismantle the valve assemblies. Examine the components for damage and wear and renew as necessary.
	5. Worn piston rings.	Renew rings.
	6. Faulty unloader, relief valves or drain valves.	Check for leakage and rectify.
	7. Blocked delivery filter.	Clean or renew.
	8. Worn pressure packings.	Renew pressure packings.
Excessive air/gas blowing from crankcase.	1. Piston rings worn or sticking in grooves.	Fit new rings. ***Note*** ***New rings must be fitted into correct respective grooves. When the word TOP appears the ring must be fitted with this face upwards.***
	2. After a considerable period of use, a fall in compressor performance may be due to general wear of pistons and cylinder bores.	Fitting new piston rings only will not effect a long term improvement - pistons and cylinders should be renewed as necessary.
Compressor knocking (when unloaded).	Excessive play in big ends or gudgeon pins.	Stop compressor, dismantle and check all moving parts. Thoroughly clean all parts and oil-ways. Renew bearings etc. as necessary.
Low Inlet pressure.	1. BPR set too low at shallow dive depths.	Refer to Chapter 8, Para 7.
Low intermediate stage pressure.	1. Air/gas leak in piping between intermediate stage delivery and succeeding stage suction.	Locate leak and repair.
	2. Intermediate stage valves seating correctly.	Reseat or replace valves.
	3. Intermediate stage relief valve not seating.	Check for leakage and rectify.
	4. Intermediate stage unloader not seating correctly.	Check unloader valve and seat for damage. Renew as necessary.
	5. Faulty pressure gauge.	Replace pressure gauge.

Fault	Probable Cause	Solution
Low delivery pressure.	1. Air/gas leak in piping after final stage delivery.	Locate leak and rectify.
	2. Final stage valves not seating correctly.	Reseat or replace valves.
	3. Final stage relief valve not seating correctly.	Check for leakage and rectify.
	4. Final stage unloader not seating correctly.	Check unloader valve and seat for damage. Renew as necessary.
	5. Faulty pressure gauge.	Replace pressure gauge.
High delivery pressure.	1. Final check valve restricted or jammed.	Stop compressor immediately. Repair or replace check valve.
	2. Press maintaining valve restricted or jammed.	Stop compressor immediately. Repair or replace pressure maintaining valve.
	3. Final delivery pipe from compressor to air receiver blocked.	Stop compressor immediately. Remove, thoroughly clean or renew pipe.
Compressor starts but will not load.	1. Low oil pressure (insufficient to operate unloaders).	See fault finding table for low oil pressure.
	2. Unloader valve stuck open or seat damaged.	Check unloader spindle for freedom of movement and damage to seat or valve. Renew parts as necessary.
	3. Defective solenoid valve.	Repair or replace defective unit.
Unloader valve blows off while compressor is running.	Valve leaking.	Replace worn valve parts.
Unloader valve does not shut down when compressor is running or fails to open when compressor is shut down.	Piston sticking in valve housing.	Remove unloader valve piston and polish as necessary. Before assembly lubricate with brake cylinder lubricant.

4 Overhaul

4.1 Booster Assembly

The Model K651/454 is a two stage, oil free, twin cylinder, watercooled, booster compressor used to boost air or gas already under pressure up to a maximum pressure of 1450 lb/in^2 (100 bar). The machine is designed for continuous operation.

Drive is from an electric motor through vee belts to the compressor flywheel. The motor and compressor are mounted on a common fabricated steel baseplate.

The compressor is arranged with the cylinders mounted vertically. The first stage has a 4-1/4 inch (108 mm) diameter bore and the second stage has a 2-5/8 inch (68.8 mm) diameter bore. Both cylinders have a common stroke of 4 inches (101.6 mm). The aluminium alloy pistons are bolted to the piston rod/crosshead assemblies and each contain one T.F.E. filled bearing ring and seven T.F.E. filled compression rings which require no lubrication. The cast iron compression cylinders are fitted with fine honed stainless steel liners. Inlet pressure is fed to the underside of each piston to reduce connecting rod and bearing loadings.

Mounted beneath each compression cylinder is a stainless steel, water cooled, pressure packing assembly. Twenty P.T.F.E. packing rings, loaded by garter springs, act on the hardened piston rods to produce a gas tight seal. Each piston rod also passes through an oil seal stuffing box mounted between the guide cylinder and the pressure packing assembly.This ensures that oil providing lubrication to the guide cylinders does not enter the compression cylinders. The seal assembly comprises a cast iron stuffing box containing a multi-element oil wiper pack. Wiped oil is returned to the crankcase by means of oil drainways. The piston rods are of sufficient length to ensure that the area wiped by the oil seal does not enter the pressure packing.

Each piston rod/crosshead assembly is attached to a forged steel connecting rod by a steel gudgeon pin retained by circlips. The small end bearings are of the needle roller bearing type and the connecting rod big end bearing are of the steel backed white metal type.

The double throw crankshaft is supported within the crankcase by two steel backed white metal bearings inserted into housings by each end of the crankcase. Lubrication of the bearings is by pressure feed and splash from an oil pump drawing from the sump and discharging via a full flow canister type filter. The guide cylinder bores are lubricated by splash.

The intercooler and aftercooler are mounted in two cooler casings mounted vertically adjacent to the cylinders. Provision is made for the separation and collection of moisture after cooling.

Each stage of the compressor is fitted with an automatic unloader valve which allows the compressor to start in an unloaded condition and also allows moisture condensate collected during operation to be drained when the compressor stops.

Figure 5 K651 / 454 Compressor

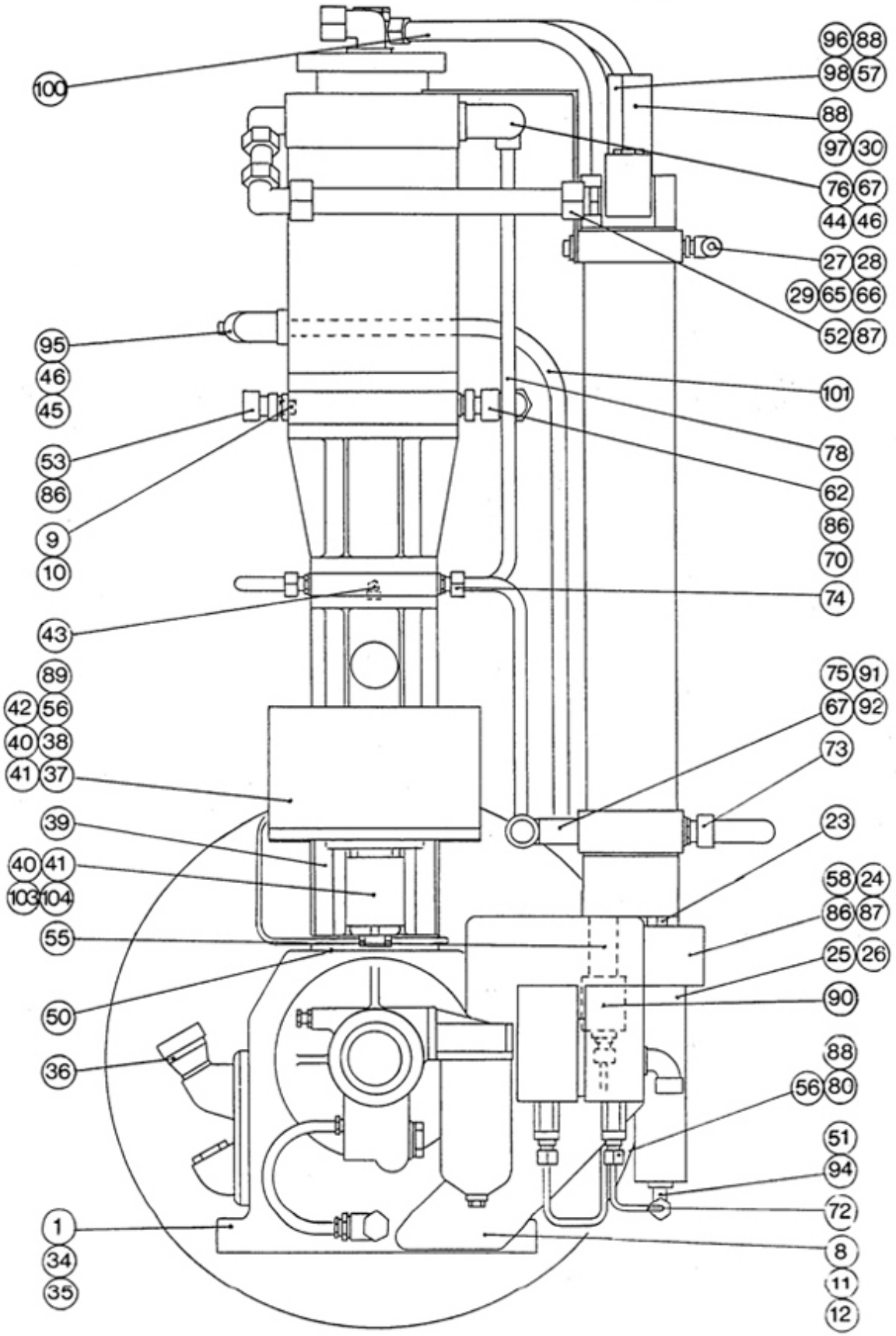

Figure 6 651 / 454 Compressor 2

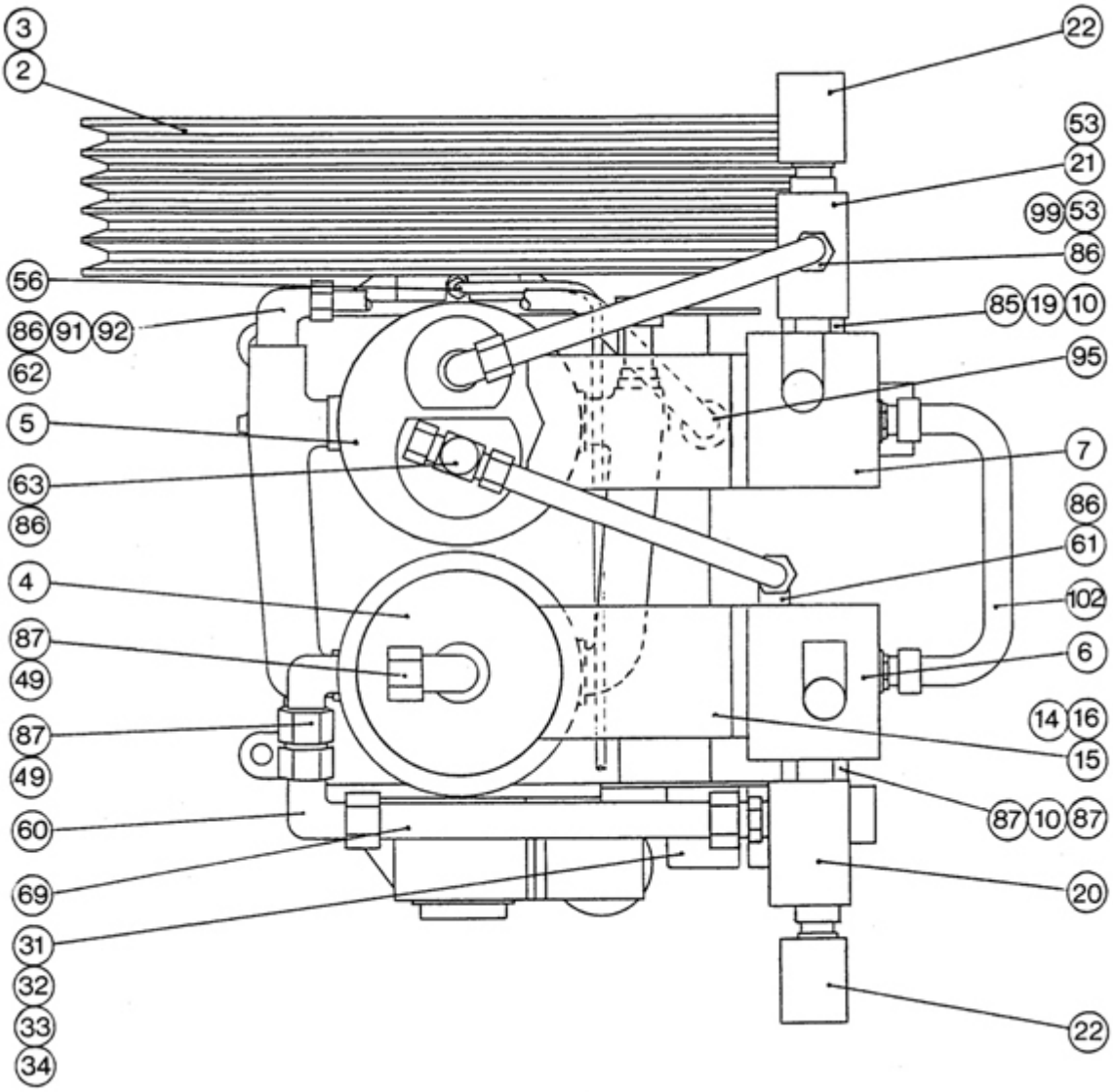

Table 2 K651/454 Compressor Parts List

Part No.	JFD Order Code	Description	Qty	Ref.
A80101	-	Crankcase Assembly	1	1
14867/01	-	Pulley	1	2
8587	DX2157	Key	1	3
GR61371	-	Cylinder Line Stage 1	1	4
GR61271	-	Cylinder Line Stage 2	1	5
A65151	GE151	Cooler Unit Stage 1	1	6
A65152	GE152	Cooler Unit Stage 2	1	7
W42886/1	-	Cooler Support Assy	1	8
Y37294/4	GE155	Plug HP 3/4” BSP	1	9

Part No.	JFD Order Code	Description	Qty	Ref.
10001/4	GC151	Seal 3/4”	2	10
BL9/29	GC545	Bolt 1/2” UNC x 7/8” Long	6	11
2547/11	DX9931	Spring Washer	6	12
-	-	-	-	13
BL9/11	-	Bolt 3/8” UNC x 3/4” Long	4	14
2421/3	-	Washer	4	15
42888/1	-	Cooler Support Bracket	2	16
BL9/11	-	Bolt 3/8” UNC x 3/4” Long	2	17
Y27820	GE135	Coupler 1-1/4” - 1-1/4” BSP	1	18
Y37291/5	GC306	Coupler 1” - 3/4” BSP	1	19
15650/8A	GE123	Probe Block	1	20
15650/9	GC359	Probe Block	1	21
43113	GE29933	Temperature Switch	2	22
W42923	DX5620	Moisture Separator Tube Assy	1	23
42873	GE128	Moisture Separator Head	1	24
42709	GE129	Moisture Separator	1	25
9017/57/90	GE038	O-ring Seal	1	26
8512/3	GE137	Hex Nipple 1/4” BSP	1	27
9472/2	GC426	Equal Tee 1/4” BSP	1	28
41097/3	GC131	Water Relief Valve	1	29
42682/5	GC134	Relief Valve Stage 1	1	30
G12586/2	GC10526	Unloader Valve	2	31
4919/6	DX1543	Nut 5/16” BSF	4	32
SL8/51	-	Stud 5/16” BSF X 6 1/2” Long	2	33
5108/15	-	Washer 5/16”	4	34
4617/4	GC20440	Plug 1/2” BSP	1	35
8632	GC026	Crankcase Breather	1	36
A65161	-	Gauge Panel	1	37
42878	-	Gauge Panel Bracket	2	38
42881	-	Gauge Panel Bracket	2	39
BL8/34	-	Bolt 1/4” UNF x 1/2” Long	6	40
4919/53	GC357	Nut	6	41
41233	GC20441	Angle Block 1/4” BSP - 1/4” NPT	4	42
41707/3	GC20443	Elbow 1/4” BSP - 8mm	2	43
8616/5	GE084	Water Manifold	1	44
8616/6	DX4111	Water Manifold	1	45

Part No.	JFD Order Code	Description	Qty	Ref.
9017/18/90	GE041	O-ring	4	46
-	-	-	-	47
-	-	-	-	48
30141/15P	DX3094	Stud Elbow 30 mm - 1-1/4” BSP	2	49
8603/ LEOTITE	DX9182	Gasket	2	50
30141/7P	GE138	Stud Elbow 6 mm - 1/4” BSP	1	51
30140/24P	GE139	Stud Coupling 30mm - 1-1/4” BSP	1	52
30140/7P	DX3092	Stud Coupling 22 mm - 3/4” BSP	2	53
-	-	-	-	54
13049/9	GE127	Coupler 3/4” - 3/4” BSP	1	55
30140/22P	DX3099	Stud Coupling 6mm - 1/4” BSP	8	56
42682/6	GE082	Relief Valve Stage 2	1	57
30157/5P	GE130	Stud Tee 1/4” BSP x 6 mm	1	58
30177/1P	GC20442	Stud Barrel Tee 1/4” x mm	2	59
30169/3P	DX3095	Equal Elbow 30 mm	1	60
30141/5P	DX1152	Stud Elbow 22 mm x 3/4”	2	61
42484/1P	DX996	Swivel Elbow 22 mm x 3/4”	3	62
42485/1P	DX2315	Swivel Tee 22 mm x 3/4”	1	63
42711	GE030	Gasket	2	64
2439/1	GE143	Valve Body	3	65
2439/2	GE144	Needle Valve Screw	3	66
6793/42	GC004	Seal Washer 3/4” BSP	2	67
-	-	-	-	68
13269/11	DX2311	Pipe 30 mm O/Dia	2 FT	69
13269/6	GC331	Pipe 22 mm O/Dia	8 FT	70
4617/5	GC20439	Plug 3/4” BSP	1	71
13269/3	GC318	Pipe 6 mm O/Dia	16 FT	72
41481/1	DX2310	Straight Coupler 22 mm - 3.4” BSP	2	73
41481/7	GE140	Straight Coupler 15 mm - 1/4” BSP	4	74
43111/1	GE141	Reducing Tee 22 mm - 15 mm - 3/4” BSP	1	75
43112/1	GE142	Red. Bush Tee 22 mm - 15 mm 3/4” BSP	1	76
30121/4	DX2309	Pipe 22 mm O/Dia	6 FT	77
30121/5	-	Pipe 15 mm O/Dia	9 FT	78
4617/7	GC20446	Plug	1	79
Y37293/3	-	Reducing Bush 1/2” - 1/4”	2	80
-	-	-	-	81

Part No.	JFD Order Code	Description	Qty	Ref.
-	-	-	-	82
-	-	-	-	83
-	-	-	-	84
10001/2	DX3090	Seal - 1”	1	85
10001/4V	GC151	Seal - 3/4” BSP	7	86
10001/7V	DX10195	Seal - 1-1/4” BSP	5	87
10001/1	DX247	Seal 1/2” BSP	3	88
10001/9	DX3922	Seal - 1/4” BSP	8	89
42919	GE131	Tee Block	1	90
5670/2	GC427	Socket	2	91
4023/4	GC311	Nipple	2	92
-	-	-	-	93
13766/3	-	Adaptor 3/8” x 1/4” BSP	1	94
41707/2	DX1158	Elbow - 2 mm x 3/4” BSP	3	95
Y37293/4	GC307	Adaptor 3/8” BSP X 1/2” BSP	1	96
13766/14	DX3098	Adaptor 1/2” BSP X 1/2” BSP	1	97
10001/3	GC166	Seal - 3/8” BSP	1	98
43266/B	-	Pipe - St.2 Delivery to St.2 Cooler	1	99
43266/E	-	Pipe - St.1 Cooler to St.2 Suction	1	100
43266/C	-	Pipe - St.2 Cooler to Comp Manifold	1	101
43266/F	-	Pipe - Cooler Link	1	102
40009/1	GE122	Low Oil Pressure Switch	1	103
30157/6P	DX1148	Stud Tee 1/8” BSP - 6mm	1	104

4.2 First Stage Assembly - Cylinder Line 4-1/4” Diameter

The cylinder head is manufactured in cast iron and is suitably ported to incorporate the combined suction and delivery valve and the cooling water exhaust connection. A stainless steel concentric type suction and delivery valve is retained by a cast iron valve cover, sealed by o-rings and incorporating the suction and delivery connection.

The piston is manufactured in aluminium alloy and is fitted with one TFE filled guide ring and seven TFE filled compression rings. The piston is bolted to the crosshead/piston rod assembly. A floating gudgeon pin, retained by circlips connects the crosshead assembly to the connecting rod. The underside of the piston is pressure balanced by a connection to the suction pressure to reduce bearing loadings.

The compression cylinder is manufactured in cast iron and is fitted with a stainless steel liner.

To prevent leakage from the compression cylinder, the hardened piston rod passes through a set of water cooled pressure packings and a set of oil wiper packings. A distance piece located between the packings ensures that the area of piston rod wiped by the oil wiper packings does not enter the pressure packings.

The pressure packing comprises multiple segmented PTFE packings rings, loaded by garter springs, which act on the hardened piston rod to provide an effective seal. The assembly is water cooled to dissipate friction and compression heat build up.

The oil wiper packing is mounted above the guide cylinder and comprises a cast iron stuffing box assembly housing a set of four segmented white metal wiper rings, loaded by garter springs, which act on the piston rod to prevent oil leakage into the compression cylinder. Wiped oil drains back into the crankcase.

The guide cylinder is manufactured in cast iron with the crosshead running in a fine honed bore.

Figure 7 Sectional View of Cylinder Head

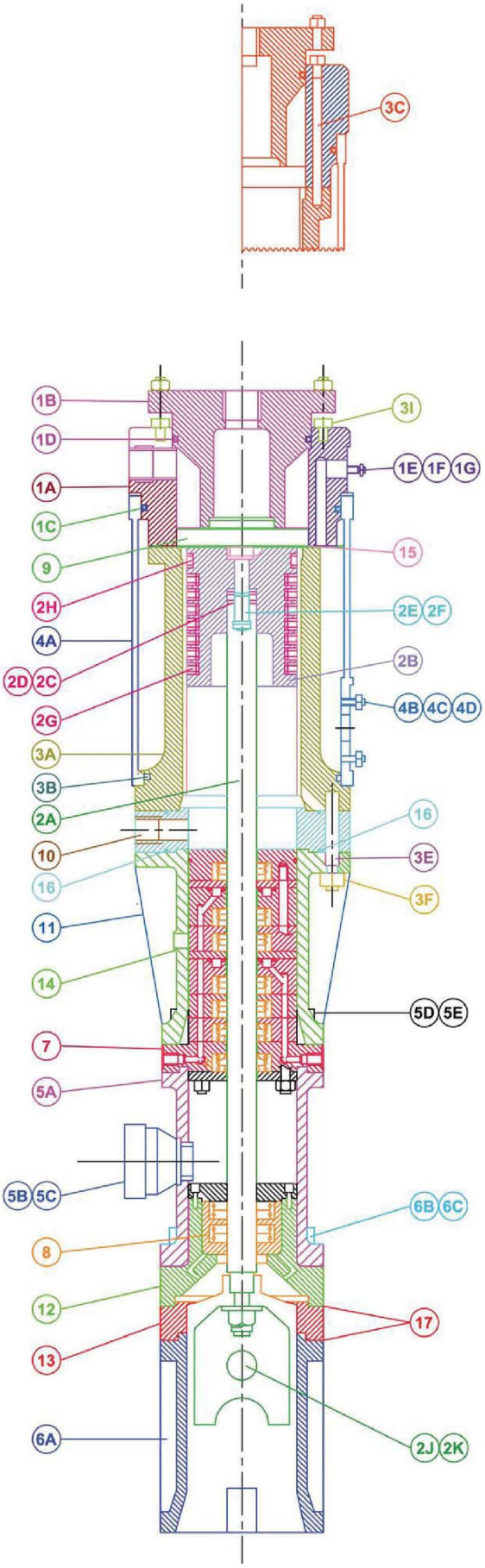

Figure 8 4-1/4" Dia Cylinder

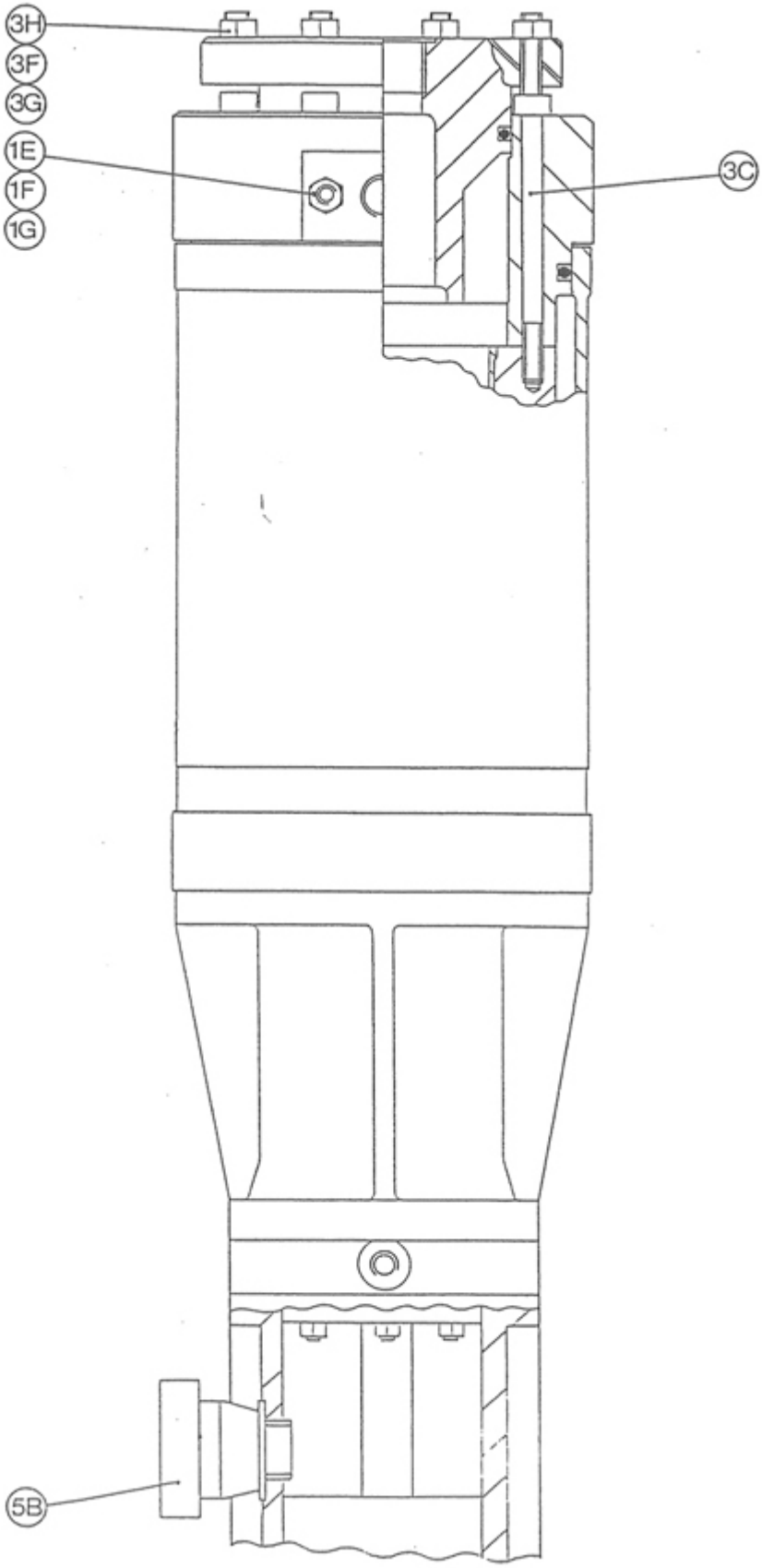

Table 3 4-1/4” Dia Cylinder - First Stage Parts List

Part No.	JFD Order Code	Description	Qty	Ref
A60341	-	Cylinder Head Assembly Comprising ref. nos. 1A-1G	1	
42848	GE094	Cylinder Head	1	1A
42874	DX1478	Valve Cover	1	1B
9655/3	GE034	o-ring Seal	1	1C
9017/73/75S	GE035	o-ring Seal	1	1D
SL12/4	DX2154	Stud - 5/16” UNC x 3/4” E/L	2	1E
4919/64	DX1543	Nut - 5/16” UNC	2	1F
2547/8	GC336	Washer	2	1G
U6133101	GC292	Piston Unit Comprising ref. nos. 2A-2K	1	
W42847	DX187	Piston Rod/Crosshead	1	2A
42852	GE092	Piston	1	2B
42857	GE103	Shim	1	2C
*42857/A	GE104	Shim	As reqd	2D
42863	DX594	Bolt 1/2” UNC x 2 3/4” E/L	1	2E
42869	DX189	Tab Lock Washer	1	2F
42859	GE003	Piston Ring	7	2G
42860	GE004	Guide Ring	1	2H
42570	GC222	Gudgeon Pin	1	2J
9107/7	GE007	Circlip	2	2K
U6033101	GE096	Cylinder Unit Comprising ref. nos. 3A-3F	1	
W42843	DX192	Cylinder/Liner	1	3A
9655/3	GE034	o-ring Seal	1	3B
9771/82	DX2215	Cap Screw 3/8” UNC x 5” Long	8	3C
-	-	-	-	3D
SL12/37	DX1707	Stud 1/2” UNC x 2 3/4” E/L	6	3E
4919/59	GE21033	Nut 1/2” UNC	10	3F
SL12/46	-	Stud 1/2” UNC x 2 1/4” Long	4	3G
2547/11	-	1/2” Spring Washer	5	3H
BL9/54	-	Bolt 1/2” UNC x 3/4” Long	1	3I
U1613002	GE093	Water Jacket Unit Comprising ref. nos. 4A-4D	1	
13935	-	Water Jacket	1	4A
SL12/4	DX2154	Stud 5/16” UNC x 3/4” E/L	2	4B
2547/8	GC336	Washer	2	4C
4919/64	DX1543	Nut 5/16” UNC	2	4D

Part No.	JFD Order Code	Description	Qty	Ref
U6112101	-	Wiper Packing Chamber Unit Comprising ref. nos. 5A-5E	1	
42877	-	Wiper Packing Chamber	1	5A
8632	GC026	Breather	1	5B
-	-	-	-	5C
SL12/28	GC20452	Stud 1/2” UNC x 2 3/8” E/L	4	5D
4919/59	GE21033	Nut 1/2” UNC	4	5E
U6011101	-	Guide Cylinder Unit, Comprising ref. nos. 6A-6C	1	
25004	DX287	Crosshead Guide	1	6A
SL12/39	DX4817	Stud 1/2” x UNC x 4 1/8” E/L	4	6B
4919/59	GE21033	Nut 1/2” UNC	4	6C
BU6122102	GE089	Pressure Packing Unit	1	7
BU6122101	GE010	Wiper Packing Unit	1	8
BU6034101	GE011	Suction and Delivery Valve	1	9
42854	-	Distance Plate - Cylinder	1	10
42876	GE134	Pressure Packing Chamber	1	11
42875	-	Wiper Packing Housing	1	12
42855	GC351	Distance Plate - Packings	1	13
-	-	-	-	14
42870	GE027	Gasket - Head	1	15
MR1395-30N	GE032	O-ring Seal Cylinder Base	2	16
8603/LEOTITE	GE022	Gasket	2	17
*Thickness of shim Ref No.2D to be sized to give 0.035”/0.040” clearance under head when cold.				

4.2.1 Dismantling

1 Drain cooling water and ensure all pressure is vented from system. Ensure compressor motor is electrically isolated.

2 Remove suction and delivery pipework and water manifold.

3 Remove four nuts securing the valve cover.

4 Remove valve cover and life out valves using extraction tool TS846.

5 Remove eight socket head cap screws securing head to the cylinder. Lift off head and recover o-ring.

6 Dismantle valve assembly by unscrewing the nut and socket cap screws and separating valve components.

Note ***Do not hold the valve in a vice when dismantling or assembling as this will result in distortion. To hold the valve during servicing, vertically secure two pegs in a vice and locate the valve seat slots onto the pegs.***

7 Remove water manifold and lift off water jacket.

8 Remove six cylinder flange nuts and life off cylinder.

9 Remove bolt in piston crown and withdraw the piston.

Note ***If required, the piston may be removed without dismantling the cylinder. Remove bolt in piston crown, insert two 1/4" UNC extraction bolts into piston crown and withdraw the piston.***

10 Withdraw cylinder spacer and recover o-rings.

11 Remove pressure packing cooling water connections. Remove nuts and withdraw pressure packing chamber.

12 Remove pressure packing case nuts and separate pressure packing. Withdraw packing rings and containers over piston rod. Ensure each packing ring is not mixed with another. Note the sequence of assembly and position of each ring during dismantling.

13 Remove wiper packing chamber.

14 Remove six socket head cap screws from wiper pack cover. Withdraw cover.

15 Rotate compressor by hand until the piston rod has carried packings clear of the stuffing box.

Note ***Particular care should be taken in dismantling the packing assembly. Care must be taken in handling not to damage the edges of the wiper rings or roll them over in any way. Wiper rings must be held square with the piston rod.***

16 Separate packing rings enable each segmented ring to be gripped in turn and by gentle pulling against the garter spring, the ring can be removed without touching the piston rod and damaging the wiping edges.

17 Remove packing housing and recover gasket. Remove spacer and recover gasket.

18 Remove four nuts, lift off the guide cylinder and recover gasket.

Note ***Support the connecting rod and crosshead/piston rod assembly to avoid damage as the guide cylinder is lifted clear.***

19 Remove circlips and with a centrally applied pressure, drive out gudgeon pin. Remove crosshead from the connecting rod.

Note ***Support crosshead against side thrust if a drift is used. Do not separate crosshead and piston rod. These components are manufactured as a complete unit. Servicing is by unit replacement only.***

4.2.2 Servicing

1 Clean and examine crosshead/piston rod assembly for signs of wear or damage and replace if wear exceeds limits given in Table of Wear Limits. Examine gudgeon pin for signs of scoring, cracking or wear and replace as necessary.

2 Inspect wiper packing rings for smooth bedding surfaces and sharp wiping edges. Renew when rings have worn until ends of segments butt. Do not remove material from ends of segments. Do not mix segments of one ring with another. Ensure smooth faces on stuffing box containers. Lap as required. Servicing is by unit replacement only.

3 Inspect pressure packing rings for signs of damage or wear. Renew when rings have worn until ends of segments butt. Do not remove material from end of segments. Do not mix segments of one ring with another. Ensure smooth faces on stuffing box containers. Lap as required. Servicing is by unit replacement only.

Note ***If new pressure packing rings are to be fitted, it will be necessary to roughen the mating surfaces of the piston rod to enable the new rings to bed in. This is best achieved by using a fine grade of emery cloth to give a 45° crosshatch finish of approximately 16 - 24 mirco inch CLA. After roughening the surface, ensure that all traces of abrasive material are removed from the piston rod by washing with a suitable solvent. Failure to roughen the piston rod could lead to premature wear of the new rings due to very high piston rod temperatures.***

Do not roughen the surface of the piston rod which passes through the oil wiper packing assembly.

4 Examine pressure packing o-ring seals for signs of damage or deterioration and replace as necessary. Clean o-ring grooves and cooling chambers, removing any sediment or scale.

5 Examine piston and rings for signs of wear or damage and replace if worn below limits given in Table of Wear Limits (page 34).

6 Examine fit of piston rings and bearing ring in piston. Renew if worn below limits given in Table of Wear Limits (page 34).

Note ***If new piston compression and bearing rings are to be fitted, it will be necessary to roughen the mating surfaces of the compression cylinder to enable the new rings to bed in. This is best achieved by using the appropriate size 'Flexi-Hone' or by a fine grade of emery cloth to give a 45° crosshatch finish of approximately 20-30 micro inch CLA. Ensure that all traces of abrasive material are removed from the cylinder wall by washing with a suitable solvent. Failure to roughen the cylinder wall could lead to premature wear of the new rings due to very high cylinder bore temperatures.***

7 Examine compression cylinder for signs of wear or scoring and replace as necessary.

8 Examine cylinder head and attachment for signs of obvious damage.

9 Inspect o-ring seal in cylinder head for signs of wear or damage and replace as necessary.

10 Examine o-ring seal in the valve cover for deterioration or damage and renew if necessary.

11 Soak all component parts of the valve assemblies in white spirit or Chlorothene VG to remove all deposits. Use a soft brush to free valve ports from all foreign matter.

Note ***Never use wire brushes or tools with sharp edges to clean the seats and plates. Use cleaning agents in accordance with manufacturers instructions.***

12 Examine valve component parts for signs of wear or damage. Replace valves if any springs have become weak or if any component parts are worn or cracked. After 5000 hours use, valves should be discarded. Servicing of valves is by unit replacement only. If a valve plate is not bedding all over its working face, lightly lap on a lapping plate with a fine grinding past or metal polish. Repeat the procedure on the valve seat and finish by lapping the valve seat and plate together. Thoroughly clean.

4.2.3 Assembly

Note ***Renew gaskets and o-rings as necessary during assembly. Refer to Figure 9 , Figure 10 and Table 4 below for pressure packing parts.***

Figure 9 Pressure Packing Arrangement

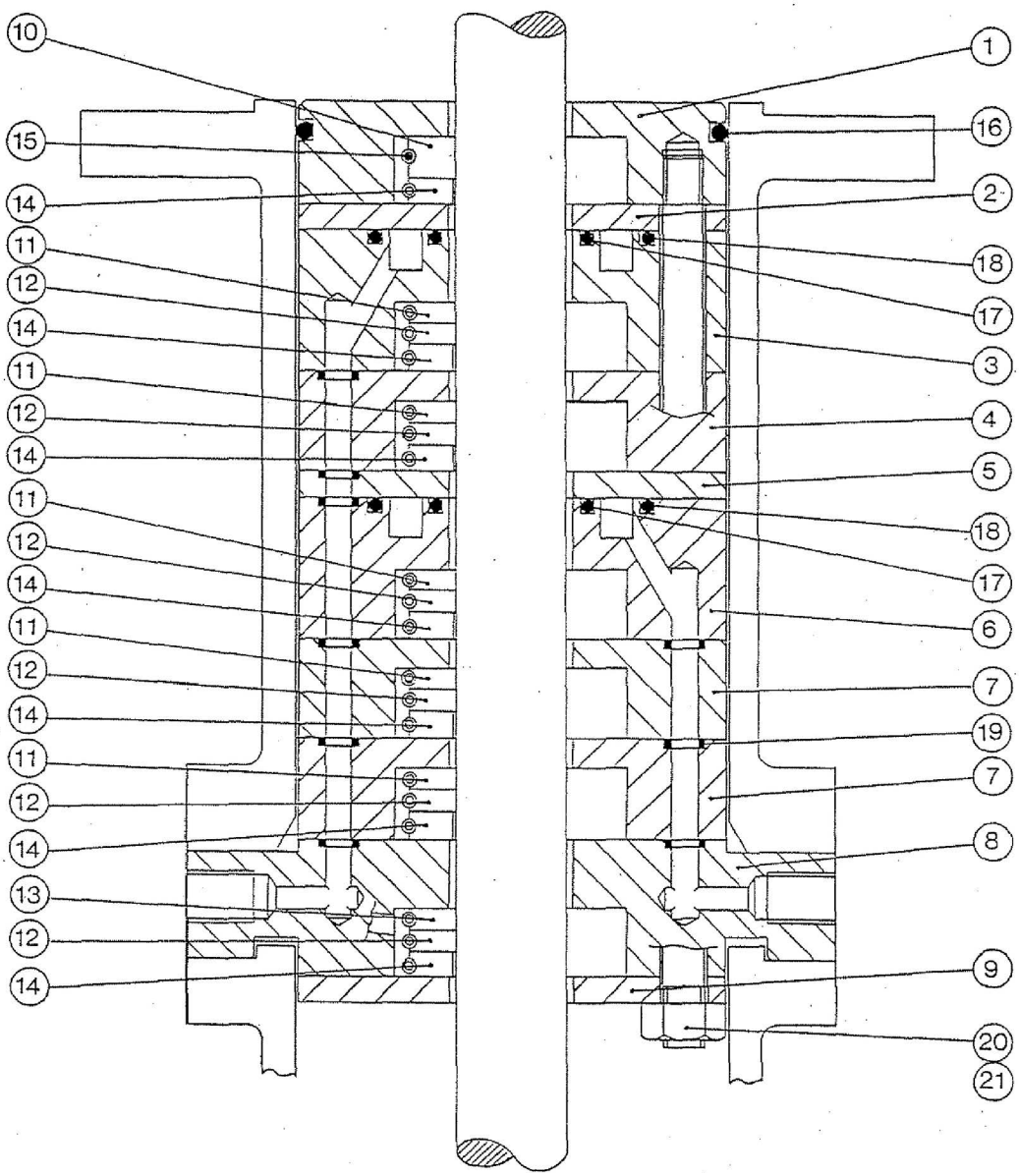

Figure 10 Pressure Packing Ring Identification

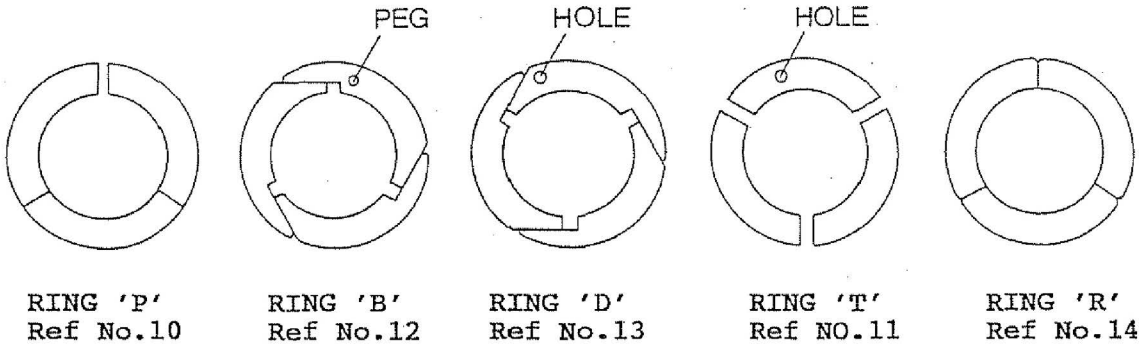

Table 4 Pressure Packing Parts

Part No.	Description	Qty	Ref
BU6122102/I	Container	1	1
BU6122102/2	Plate	1	2
BU6122102/3	Container	1	3
BU6122102/4	Container	1	4
BU6122102/5	Plate	1	5
BU6122102/6	Container	1	6
BU6122102/7	Container	2	7
BU6122102/8	Case	1	8
BU6122102/9	Plate	1	9
BU6122102/10	Ring 'p'	1	10
BU6122102/11	Ring , T,	5	11
BU6122102/12	Ring 'B'	6	12
BU6122102/13	Ring 'D'	1	13
BU6122102/14	Ring 'R'	7	14
BU6122102/15	Garter Spring	20	15
BU6122102/16	'0' Ring	1	16
BU6122102/17	'0' Ring	2	17
BU6122102/18	'0' Ring	2	18
BU6122102/19	'0' Ring	12	19
BU6122102/20	Tie Stud	3	20
BU6122102/21	Nut 3/8" BSW	3	21

1 Replace one circlip in the crosshead and smear gudgeon pin and crosshead with lubricating oil. Insert gudgeon pin into the crosshead and connecting rod small end and drive pin home with a soft faced mallet. Replace other circlip.

Note ***The crosshead should be suitably cushioned during this operation to avoid bending the connecting rod or damaging bottom end bearings.***

2 Lightly lubricate crosshead and guide cylinder walls. Fit guide cylinder, using a new paper gasket as base. Replace four nuts and torque to value given in loading chart. If studs have been removed for any reason, these should be replaced with torque value as given in loading chart.

3 Refit spacer, using a new gasket at base.

4 Refit packing housing, using a new gasket at base.

5 Turn crankshaft by hand until crosshead/piston is at top of stroke. Lightly lubricate piston rod working surface.

6 Place each packing ring in turn over the piston rod, preferably using two pairs of hands to expand garter spring so that all the segments are away from rod during positioning. The assistance of another operator is desirable in this operation. If another operator is not available, use tool No.TS841 to enable rings to be placed onto rod.

Note ***Take care when handling not to damage the edges of the wipers or roll them in contact with the rod. Wipers must always be held square with the guide rod. Fit rings in the order shown in the illustration of the packing assembly. The lower wiper rings nearest to the cylinder have their slotted faces downwards and plain faces uppermost.***

7 Turn crankshaft by hand to lower ring pack into housing and when piston rod is at bottom of stroke, replace the cap and retaining screws. Torque screws to value given in loading chart. Wipe dry the guide rod and top of seal pack.

8 Refit wiper packing chamber and tighten nuts to value given in torque loading chart.

9 Turn crankshaft by hand until piston rod is at top of stroke. Ensure piston rod is clean and dry. Ensure that hands are clean to prevent oil contamination of pressure packings.

10 Assemble pressure packing. Ensure correct sequence of assembly with reference to the illustration. Ensure correct alignment of coolant, lubrication and vent chambers.

Note ***Connections are stamped 'CI' - Cooling Inlet, 'CO' - Cooling Outlet and 'V' - Vent.***

11 When pressure packing is assembled, tighten pressure packing nuts to value given in Torque Loading Chart.

12 Rotate compressor by hand until complete assembly is drawn down onto wiper packing chamber. Fit pressure packing chamber over assembly and tighten nuts value given in Torque Loading Chart.

13 Fit cylinder spacer, ensuring correct location of o-rings.

Note ***Ensure the piston ring radial pressure breaker grooves are facing upward.***

14 Assemble piston and piston rings. Ensure gaps in neighbouring rings are 90° apart.

Note ***Bearing ring is located in groove nearest piston crown.***

15 Fit piston onto piston rod. Ensure correct location of shims. If a new piston is being fitted, check for correct clearance with cylinder head and adjust as necessary using new shims.

Note ***Piston crown/cylinder head clearance 0.035”/0.040” when cold.***

16 Tighten piston socket head screw to value given in Torque Loading Chart and bend over locking tab.

17 Fit compression cylinder over piston. Carefully feed each piston ring into the bore via the chamfer at its base. Tighten nuts to value given in Torque Loading Chart.

18 Fit water jacket. Ensure correct location of o-rings.

19 Fit cylinder head. Ensure correct location of o-rings and head gasket. Tighten socket head cap screws evenly to value given in Torque Loading Chart.

20 Assemble combined suction and delivery valve with reference to the illustration. Ensure all components are positioned correctly. Tighten nuts to the value given in the Torque Loading Chart. Tighten socket cap screws.

21 Fit valve into cylinder head pockets. Lap in valve as necessary. Fit valve cover and tighten nuts to value given in Torque Loading Chart. Ensure correct location of o-ring.

22 Fit suction and delivery pipework. Connect cooling water manifolds. Fill compressor with cooling water.

4.3 Oil Wiper Packing Assembly

Part Number: BU6122101 (JFD Order Code: GC301)

Figure 11 Oil Wiper Packing Assembly

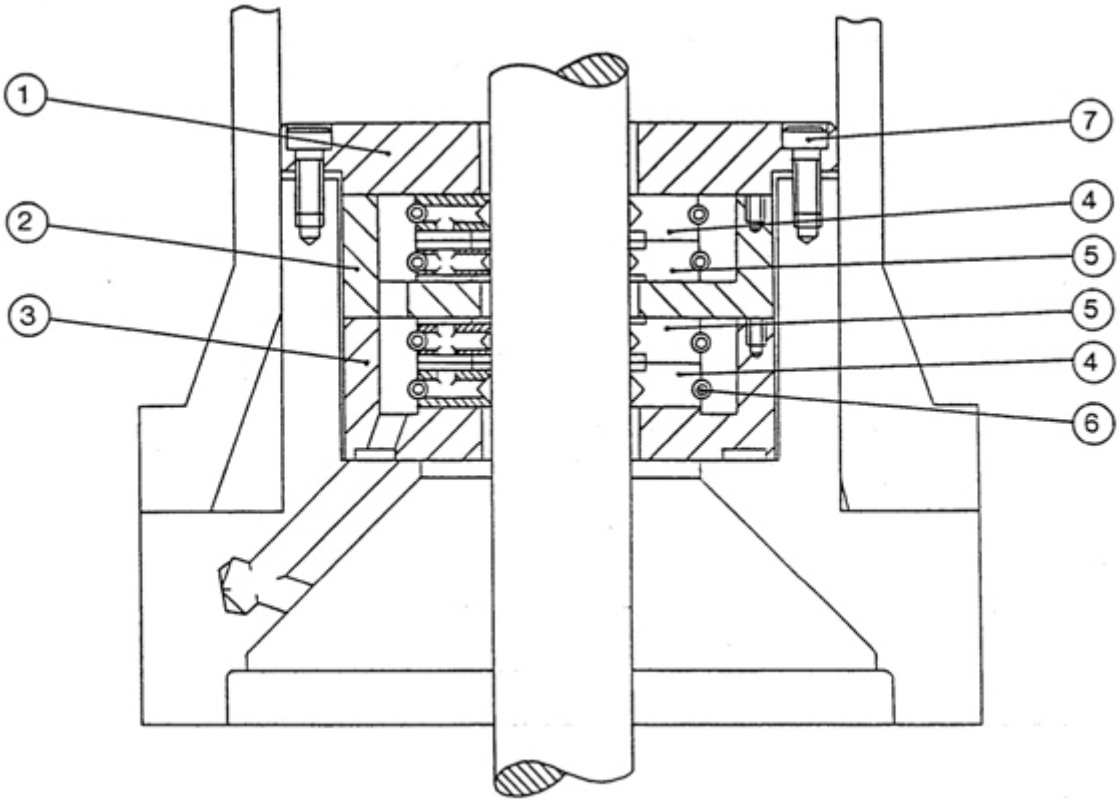

Table 5 Oil Wiper Packing Assembly Parts List

Part No.	Description	Qty	Ref.
BU6122101/1	Plate	1	1
BU6122101/2	Container	1	2
BU6122101/3	Container	1	3
BU6122101/4*	Ring ‘W1’	2	4
BU6122101/5*	Ring ‘W2’	2	5
BU6122101/6*	Garter Spring	4	6
BU6122101/7	Caphead Screw - 2BA x 1/2”	6	7
*These items are contained within Wiper Packing Kit BU6122101/4-6 (JFD Order Code: GE010).			

4.4 Concentric Type Combined Suction & Delivery Valve

Part Number: BU6034101 (JFD Order Code: GE011)

Figure 12 Combined Suction and Delivery Valve

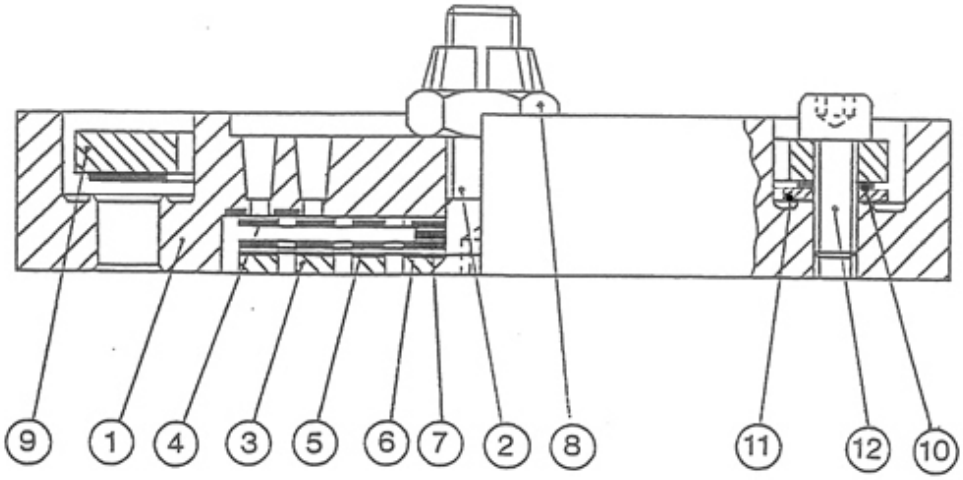

Table 6 Combined Suction and Delivery Valve Parts List

Part No.	Description	Qty	Ref.
BU6034101/1	Concentric Seat	1	1
BU6034101/2	Centre Screw	1	2
BU6034101/3	Buffer Plate	1	3
BU6034101/4	Valve Plate	1	4
BU6034101/5	Spring Plate Assy, Comprising 5A	1	5
BU6034101/15A	Spring Plate	2	5A
BU6034101/6	Lift Washer Middle	1	6
BU6034101/7	Lift Washer Middle	1	7
BU6034101/8	MHT Nut	1	8
BU6034101/9	Buffer Plate	1	9
BU6034101/10	Valve Ring	1	10
BU6034101/11	Lift Washer	2	11
BU6034101/12	Socket Cap Screw	2	12

Note ***Ref. No. 12 Socket Cap Screws to be secured with Locite.***

Table 7 Dimensions & Table of Wear Limits - Cylinder Line 4 1/4” Diameter

Item	Design Size Inches (mm)	Wear Limit Inches (mm)	*Maximum Total Clearance (mm)
Cylinder Bore Diameter	4.250/4.251 (107.95/107.98)		
Piston Diameter	4.157/4.1548 (105.58/105.53		
Guide Ring Radial Thickness	0.250 (6.35)	0.22 (5.59)	
Guide Ring Axial Thickness	0.362 (9.195)		0.015 (0.38)
Guide Ring Groove Width	0.375/0.3764 (9.525/9.56)		
Guide Ring End Gap	0.106 (2.69)	0.121 (3.07)	
Piston Ring Radial Thickness	0.375 (9.53)	0.187 (4.75)	
Piston Ring Axial Thickness	0.303 (7.70)		0.012 (0.305)
Piston Ring Groove Width	0.3134/0.312 (7.96/7.93)		
Piston Ring End Gap	0.028 x 2 (0.71 x 2)	0.043 x 2 (1.09 x 2)	
Pressure Packing Rings	Replace when segment ends butt.		
Wiper Packing Rings	Replace when segment ends butt.		
Gudgeon Pin Diameter	1.0002/1.0000 (25.41/25.40)	0.9998 (25.39)	
Small End Bearing Diameter	1 in Nom Bore		
Crosshead Diameter	3.9975/3.997 (101.53/101.52)	3.995 (101.47)	0.006 (.152)
Crosshead Guide Bore	4.000/4.001 (101.6/101/62)	4.003 (101/67)	

Note ***Check clearances cold.***

Table 8 Torque Loading Chart - First Stage Cylinder (4 1/4” Diameter)

Item	Loading	
	Lb/Ft	(Kg/m)
Cylinder Head Socket Head Cap Screw	20	(2.76)
Valve Cover Studs	12	(1.66)

Item	Loading	
	Lb/Ft	(Kg/m)
Valve Cover Nuts	20	(2.76)
Valve Nuts	14.5 - 17.8	(2.0 - 2.45)
Pressure Packing Nuts	24	(3.32)
Wiper Packing Caphead Screws	4	(0.55)
Crosshead Guide/Crankcase Nuts	30	(4.15)
Wiper Packing Chamber/Crosshead Guide Studs	35	(4.84)
Wiper Packing Chamber/Crosshead Guide Nuts	30	(4.15)
Pressure Packing Chamber/Wiper Packing Chamber Studs	35	(4.84)
Pressure Packing Chamber/Wiper Packing Chamber Nuts	30	(4.15)
Cylinder/Pressure Packing Chamber Studs	35	(4.84)
Cylinder/Pressure Packing Chamber Nuts	30	(4.15)
Piston Socket Head Screw	30	(4.15)
Water Manifold Studs	13	(1.80)
Water Manifold Nuts	10	(1.38)

4.5 Second Stage Assembly - Cylinder Line 2 5/8” Diameter

4.5.1 Description

The cylinder head is manufactured in cast iron and is suitable ported to incorporate the suction and delivery valves and the cooling water exhaust connection. Stainless steel ring type suction and delivery valves are retained by cast iron valve covers, sealed by o-rings and incorporating the suction and delivery connections.

The piston is manufactured in aluminium alloy and is fitted with one TFE filled guide ring and seven TFE filled compression rings. The piston is bolted to the crosshead/piston rod assembly. A floating gudgeon pin, retained by circlips connects the crosshead assembly to the connecting rod. The underside of the piston is pressure balanced by a connection to the suction pressure to reduce bearing loadings.

The compression cylinder is manufactured in cast iron and is fitted with a stainless steel liner.

To prevent leakage from the compression cylinder, the hardened piston rod passes through a set of watercooled pressure packings and a set of oil wiper packings. A distance piece located between the packings ensures that the area of piston rod wiped by the oil wiper packings does not enter the pressure packings.

The pressure packing comprises multiple segmented PTFE packings rings, loaded by garter springs, which act on the hardened piston rod to provide an effective seal. The assembly is water cooled to dissipate friction and compression head build up.

The oil wiper packing is mounted above the guide cylinder and comprises a cast iron stuffing box assembly housing a set of four segmented white metal wiper rings, loaded by garter springs, which act on the piston rod to prevent oil leakage into the compression cylinder. Wiped oil drains back into the crankcase.

The guide cylinder is manufactured in cast iron with the crosshead running in a fine honed bore.

Figure 13 2 5/8" Dia Cylinder

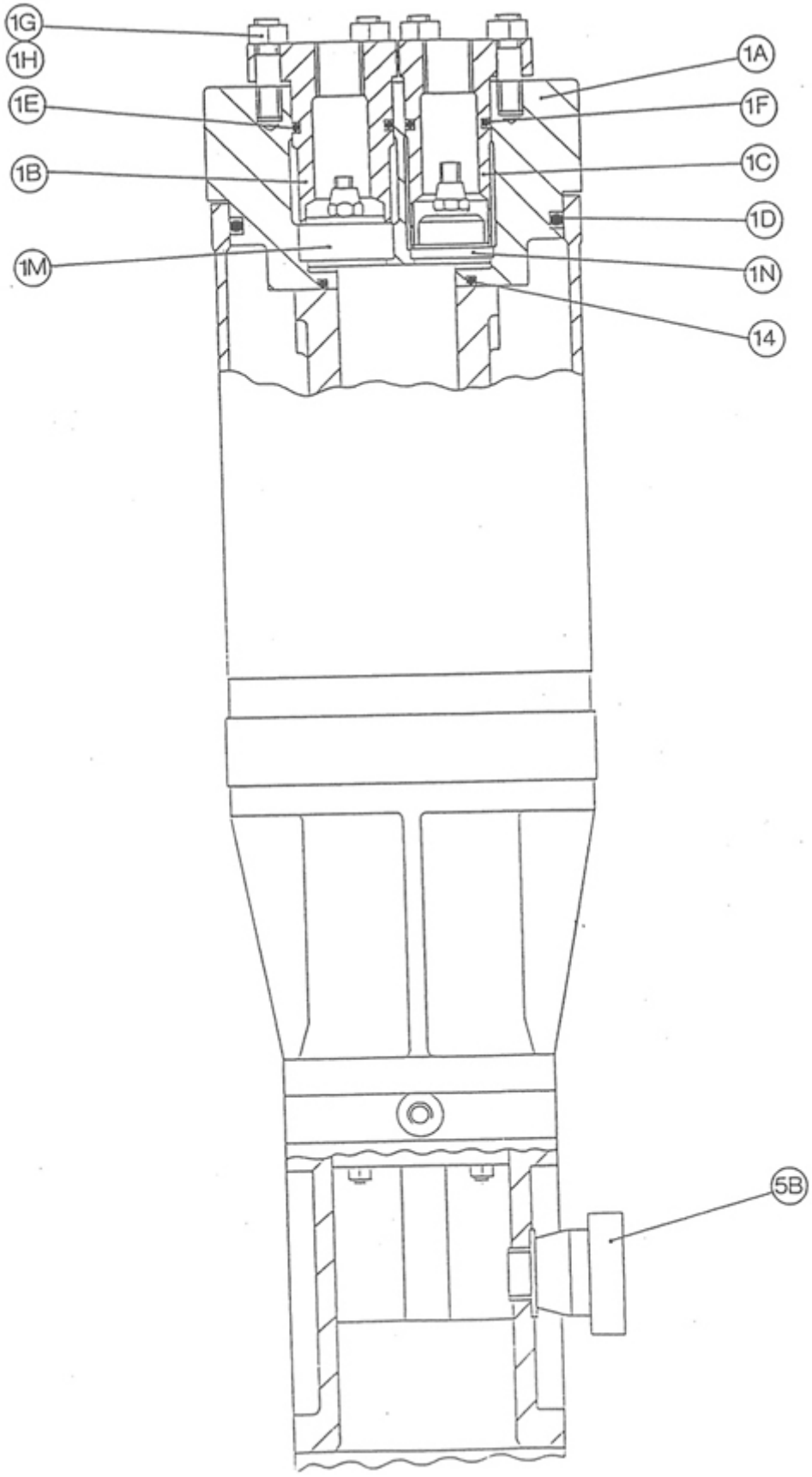

Table 9 2 5/8” Diameter Cylinder - Second Stage Parts List

Part No.	JFD Order Code	Description	Qty	Ref.
A60241	DX4008	Cylinder Head Assy Comprising ref. nos. 1A-1R	1	-
42849	GE091	Cylinder Head	1	1A
42850	DX126	Valve Cover (Suction)	1	1B
42851	GE095	Valve Cover (Delivery)	1	1C
9655/3	GE034	O-Ring Seal	1	1D
9017/14/75S	GE036	O-Ring Seal	1	1E
9017/62/90S	GE037	O-Ring Seal	1	1F
SL12/50	GC293	Stud 1/2” UNC x 19/16”	4	1G
4919/59	GE21033	Nut 1/2”UNC	4	1H
SL12/4	DX2154	Stud 5/16” UNC x 3/4”	2	1J
4919/64	DX1543	Nut 5/16” UNC	2	1K
2547/8	GC336	Washer 5/16”	2	1L
BU6024101	GE012	Valve Unit (Suction)	1	1M
BU6024102	GE013	Valve Unit (Delivery)	1	1N
SL12/51	GC294	Stud 3/8” UNC x 5/8”	2	1P
4919/57	DX494	Nut 3/8” UNC	2	1R
BL9/54	-	Bold 1/2” UNC x 3/4£	1	1S
2547/11	DX9931	Spring Washer	1	1T
U6123101	GC291	Piston Unit Comprising ref. nos. 2A-2K	1	-
W42847	DX187	Piston Rod/Crosshead Assy	1	2A
42853	GE090	Piston	1	2B
42857	GE103	Shim	1	2C
*42857/A	GE104	Shim	As reqd	2D
42863	DX594	Bolt 1/2” UNC x 2 3/4”	1	2E
42869	DX189	Tab Lock Washer	1	2F
42861	GE005	Piston Ring	7	2G
42862	GE006	Guide Ring	1	2H
42570	GC222	Gudgeon Pin	1	2J
9107/7	GE007	Circlips	2	2K
U6023101	-	Cylinder Unit Comprising ref. nos. 3A-3E	1	-
W42844	DX289	Cylinder/Liner Assy	1	3A
9655/3	GE034	O-Ring Seal	1	3B
9771/78	DX4829	Cap Screw 1/2” UNC x 4 1/2”	4	3C
SL12/37	DX1707	Stud 1/2” UNC x 2 3/4”	6	3D

Part No.	JFD Order Code	Description	Qty	Ref.
4919/59	GE21033	Nut 1/2” UNC	6	3E
U1613002	GE093	Water Jacket Unit Comprising ref. nos. 4A-4D	1	-
13935	-	Water Jacket	1	4A
SL12/4	DX2154	Stud 5/16” UNC x 3/4”	2	4B
2547/8	GC336	Washer 5/16”	2	4C
4919/46	DX843	Nut 5/16” UNC	2	4D
U6112101	-	Wiper Packing Chamber Unit Comprising ref. nos. 5A-5E	1	-
42877	-	Wiper Packing Chamber	1	5A
8532	-	Breather	1	5B
-	-	-	-	5C
SL12/28	GC20452	Stud 1/2” UNC x 2 3/8”	4	5D
4919/59	GE21033	Nut 1/2” UNC	4	5E
U6011101	-	Crosshead Guide Cylinder Unit Comprising ref. nos. 6A-6C	1	-
25004	DX287	Crosshead Guide	1	6A
SL12/39	DX4817	Stud 1/2” UNC x 4 1/8”	4	6B
4919/59	GE21033	Nut 1/2” UNC	4	6C
BU6122102	GE089	Pressure Packing Unit	1	7
BU6122101	GE010	Wiper Packing Unit	1	8
42854	-	Distance Plate (Cylinder)	1	9
42876	GE134	Pressure Packing Chamber	1	10
42875	-	Wiper Packing Housing	1	11
42855	GC351	Distance Plate - Packings	1	12
-	-	-	-	13
MR0845-30V	DX9690	O-Ring Seal (Cyl Head)	1	14
MR1395-30N	GE032	O-Ring Seal (Cyl Base)	2	15
8603/ LEOTITE	GE022	Gasket	2	16
4617/4	GC20440	Plug	1	17
*Thickness of shim Ref No.2D to be sized to give 0.035”/0.040” clearance under head when cold.				

4.5.2 Dismantling

1 Drain cooling water and ensure all pressure is vented from system. Ensure compressor motor is electrically isolated.

2 Remove suction and delivery pipework and water manifold.

3 Remove three nuts securing each valve cover.

4 Remove valve covers and lift out valves.

5 Remove four socket head cap screws securing head to the cylinder. Lift off head and recover o-rings.

6 Dismantle each valve assembly by unscrewing the nut and separating valve components.

Note ***Do not hold the valve in a vice when dismantling or assembling as this will result in distortion. To hold the valve during servicing, vertically secure two pegs in a vice and locate the valve seat slots onto the pegs.***

7 Remove water manifold and lift off water jacket.

8 Remove six cylinder flange nuts and lift off cylinder.

9 Remove bolt in piston crown and withdraw the piston.

Note ***If required, the piston may be removed without dismantling cylinder. Remove bolt in piston crown, insert two 1/4" UNC extraction bolts into piston crown and withdraw piston.***

10 Withdraw cylinder spacer and recover o-rings.

11 Remove pressure packing cooling water connections. Remove nuts and withdraw pressure packing chamber.

12 Remove pressure packing case nuts and separate pressure packing. Withdraw packing rings and containers over piston rod. Ensure each packing ring is not mixed with another. Note the sequence of assembly and position of each ring during dismantling.

13 Remove wiper packing chamber.

14 Remove six socket head cap screws from wiper pack cover. Withdraw cover.

15 Rotate compressor by hand until piston rod has carried packing clear of the stuffing box.

Note ***Particular care should be taken in dismantling the packing assembly. Care must be taken in handling not to damage the edges of the wiper rings or roll them over in any way. Wiper rings must be held square with the piston rod.***

16 Separate packing rings to enable each segmented ring to be gripped in turn and by gentle pulling against the garter spring, the ring can be removed with out touching the piston rod and damaging the wiping edges.

Note ***The assistance of another operator is desirable in this recover gasket.***

17 Remove packing housing and recover gasket. Remove spacer and recover gasket.

18 Remove four nuts, lift off the guide cylinder and recover gasket.

Note ***Support the connecting rod and crosshead/piston rod assembly to avoid damage as the guide cylinder is lifted clear.***

19 Remove circlips and with a centrally applied pressure, drive out gudgeon pin. Remove crosshead from the connecting rod.

Note ***Support crosshead against side thrust if a drift is used. Do not separate crosshead and piston rod. These components are manufactured as a complete unit. Servicing is by unit replacement only.***

4.5.3 Servicing

1 Clean and examine crosshead/piston rod assembly for signs of wear or damage and replace if wear exceeds limits given in Table of Wear Limits. Examine gudgeon pin for signs of scoring, cracking or wear and replace as necessary.

2 Inspect wiper packing rings for smooth bedding surfaces and sharp wiping edges. Renew when rings have worn until ends of segments butt. Do not remove material from ends of segments. Do not mix segments of one ring with another. Ensure smooth faces on stuffing box containers. Lap as required. Servicing is by unit replacement only.

3 Inspect pressure packings rings for signs of damage or wear. Renew when rings have worn until ends of segments butt. Do not remove material from ends of segments. Do not mix segments of one ring with another. Ensure smooth faces on stuffing box containers. Lap as required. Servicing is by unit replacement only.

Note ***If new pressure packing rings are to be fitted, it will be necessary to roughen the mating surfaces of the piston rod to enable the new rings to bed in. This is best achieved by using a fine grade of emery cloth to give a 45° crosshatch finish of approximately 16 - 24 micro inch CLA. After roughening the surface, ensure that all traces of abrasive material are removed from the piston rod by washing with a suitable solvent.***

Note ***Failure to roughen the piston rod could lead to premature wear of the new rings due to very high piston rod temperatures.***

Note ***Do not roughen the surface of the piston rod which passes through the oil wiper packing assembly.***

4 Examine pressure packing o-ring seals for signs of damage or deterioration and replace as necessary. Clean o-ring grooves and cooling chambers, removing any sediment or scale.

5 Examine piston and rings for signs of wear or damage and replace if worn below limits given in Table of Wear Limits.

6 Examine fit of piston rings and bearing ring in piston. Renew if worn below limits given in Table of Wear Limits.

Note ***If new piston compression and bearing rings are to be fitted, it will be necessary to roughen the mating surfaces of the compression cylinder to enable the new rings to bed in. This is best achieved by using the appropriate size 'Flexi-Hone' or by a fine grade of emery cloth to give a 45o crosshatch finish of approximately 20 - 30 micro inch CLA. Ensure that all traces of abrasive material are removed from the cylinder wall by washing with a suitable solvent. Failure to roughen the cylinder wall could lead to premature wear of the new rings due to very high cylinder bore temperatures.***

7 Examine compression cylinder for signs of wear or scoring and replace as necessary.

8 Examine cylinder head and attachment for signs of obvious damage.

9 Inspect o-ring seals in cylinder head for signs of wear or damage and replace as necessary.

10 Examine o-rings on the valve covers for deterioration or damage and renew if necessary.

11 Soak all component parts of the valve assemblies in white spirit or Chlorothene VG to remove all deposits. Use a soft brush to free valve ports from all foreign matter.

Note ***Never use wire brushes or tools with sharp edges to clean the seats and plates. Use cleaning agents in accordance with manufacturers instructions.***

12 Examine valve component parts for signs of wear or damage. Replace valves if any springs have become weak or if any component parts are worn or cracked. After 5000 hours use, valves should be discarded. Servicing of valves is by unit replacement only.

13 If a valve plate is not bedding all over its working face, lightly lap on a lapping plate with a fine grinding paste or metal polish. Repeat the procedure on the valve seat and finish by lapping the valve seat and plate together. Thoroughly clean.

4.5.4 Assembly

Note ***Renew gaskets and o-rings as necessary during assembly.***

1 Replace one circlip in the crosshead and smear gudgeon pin and crosshead with lubricating oil. Insert gudgeon pin into the crosshead and connecting rod small end and drive pin home with a soft faced mallet. Replace other circlip.

Note ***The crosshead should be suitably cushioned during this operation to avoid bending the connecting rod or damaging bottom end bearings.***

2 Lightly lubricate crosshead and guide cylinder walls. Fit guide cylinder, using a new paper gasket at base. Replace four nuts and torque to value given in loading chart. If studs have been removed for any reason, these should be replaced with torque value as given in loading chart.

3 Refit spacer, using a new gasket at base.

4 Refit packing housing, using a new gasket at base.

5 Turn crankshaft by hand until crosshead/piston is at top of stroke. Lightly lubricate piston rod working surface.

6 Place each packing ring in turn over the piston rod, preferably using two pairs of hands to expand garter spring so that all the segments are away from rod during positioning. The assistance of another operator is desirable in this operation. If another operator is not available, use tool No.TS841 to enable rings to be placed onto rod.

Note ***Take care when handling not to damage the edges of the wipers or roll them in contact with the rod. Wipers must always be held square with the guide rod. Fit rings in the order shown in the illustration of the packing assembly. The lower wiper rings nearest to the crankcase have their plain faces downwards and slotted faces uppermost. The upper wiper rings nearest to the cylinder have their slotted faces downwards and plain faces uppermost.***

7 Turn crankshaft by hand to lower ring pack into housing and when piston rod is at bottom of stroke, replace the cap and retaining screws. Torque screws to value given in loading chart. Wipe dry the guide rode and top of seal pack.

8 Refit wiper packing chamber and tighten nuts to value given in torque loading chart.

9 Turn crankshaft by hand until piston rod is at top of stroke. Ensure piston rod is clean and dry. Ensure that hands are clean to prevent oil contamination of pressure packings.

10 Assemble pressure packing. Ensure correct sequence of assembly with reference to the illustration, ensure correct alignment of coolant, lubrication and vent chambers.

Note ***Connections are stamped 'CI' - Cooling Inlet, 'CO' - Cooling Outlet and 'V' - Vent. Ensure correct location of o-rings. Packing rings are located by peg with their mating rings. Place each packing ring in turn over the piston rod, preferably using two pairs of hands to expand garter springs so that all the segments are away from the rod during positioning. The assistance of another operator is desirable in this operation. If another operator is not available, use Tool No.TS841 to enable rings to be placed onto rod.***

11 When pressure packing is assembled, tighten pressure packing nuts to value given in Torque Loading Chart.

12 Rotate compressor by hand until complete assembly is drawn down onto wiper packing chamber. Fit pressure packing chamber over assembly and tighten nuts value given in Torque Loading Chart.

13 Fit cylinder spacer, ensuring correct location of o-rings.

Note ***Ensure the piston ring radial pressure breaker grooves are facing upward.***

14 Assemble piston and piston rings. Ensure gaps in neighbouring rings are 90° apart.

Note ***Bearing ring is located in groove nearest piston crown.***

15 Fit piston onto piston rod. Ensure correct location of shims. If a new piston is being fitted, check for correct clearance with cylinder head and adjust as necessary using new shims.

Note ***Piston crown/cylinder head clearance 0.035"/0.040" when cold.***

16 Tighten piston socket head screw to value given in Torque Loading Chart and bend over locking tab.

17 Fit compression cylinder over piston. Carefully feed each piston ring into the bore via the chamfer at its base. Tighten nuts to value given in Torque Loading Chart.

18 Fit water jacket. Ensure correct location of o-rings.

19 Fit cylinder head. Ensure correct location of o-rings. Tighten socket head cap screws evenly to value given in Torque Loading Chart.

20 Assemble suction and delivery valves with reference to the illustrations. Ensure all components are positioned correctly. Tighten nuts to the value given in the Torque Loading Chart and fit new split pins.

21 Fit valves into cylinder head packets. Lap in valves as necessary. Fit valve covers and tighten nuts to value given in Torque Loading Chart. Ensure correct location of o-rings.

22 Fit suction and delivery pipework. Connect cooling water manifolds. Fill compressor with cooling water.

4.5.5 Oil Wiper Packing Assembly

Part Number: BU6122101 (JFD Order Code: GC301)

Figure 14 Oil Wiper Packing Assembly

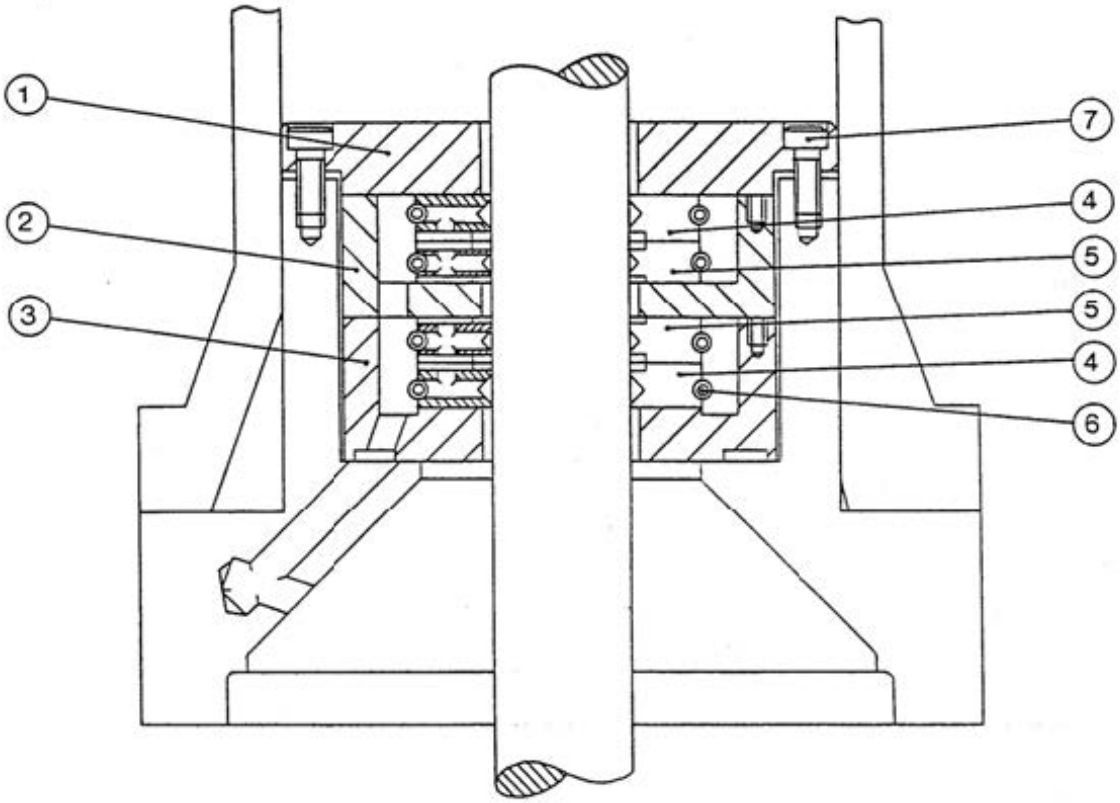

Table 10 Oil Wiper Packing Assembly Parts List

Part No.	Description	Qty	Ref
BU6122101/1	Plate	1	1
BU6122101/2	Container	1	2
BU6122101/3	Container	1	3
BU6122101/4*	Ring ‘W1’	2	4

Part No.	Description	Qty	Ref
BU6122101/5*	Ring 'W2'	2	5
BU6122101/6*	Garter Spring	4	6
BU6122101/7	Caphead Screw - 2BA x 1/2"	6	7
*These items are contained within Wiper Packing Kit BU6122101/4-6 (JFD Order Code GE010).			

4.5.6 Suction Valve

Part Number: BU6024101 (JFD Order Code: GE012)

Figure 15 Suction valve

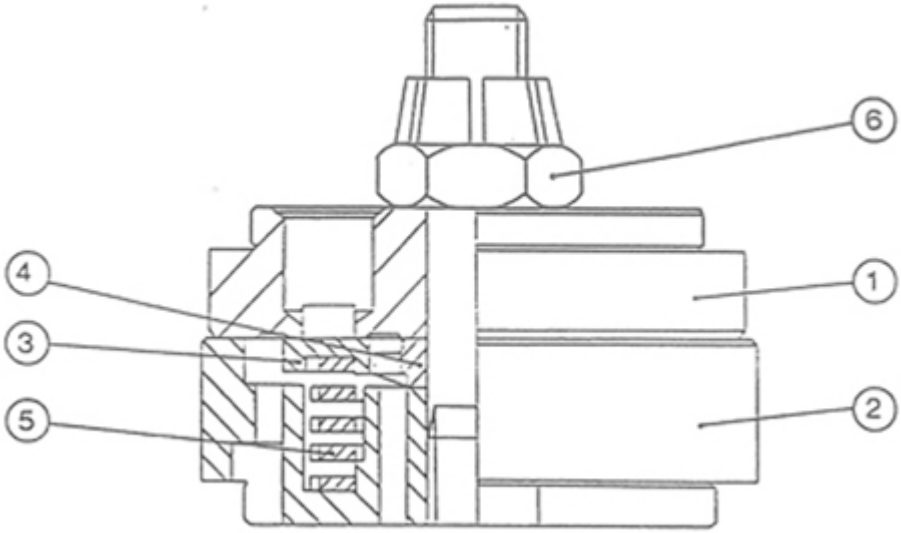

Table 11 Suction Valve Parts List

Part No.	Description	Qty	Ref.
BU6024101/1	Seat Assy Comprising:-	1	1
BU6024101/1A	Seat		
BU6024101/1B	Centre Bolt		
BU6024101/1C	Locking Device		
BU6024101/1D	Locating Pin		
BU6024101/1E	Locating Pin		
BU6024101/1F	Locating Pin		
BU6024101/2	Guard Assy Comprising:-	1	2
BU6024101/2A	Guard		
BU6024101/2B	Centre Bolt		
BU6024101/2C	Locking Device		
BU6024101/2D	Locating Pin		
BU6024101/2E	Locating Pin		

Part No.	Description	Qty	Ref.
BU6024101/3	Buffer Plate	1	3
BU6024101/3A	Plate Assy		
BU6024101/3B	Valve Ring		
BU6024101/3C	Guide Plate		
BU6024101/3D	Rivet		
BU6024101/3E	Plate Assy		
BU6024101/3F	Spring Plate		
BU6024101/3G	Spring Plate		
BU6024101/3H	Lifter Washer - Lower		
BU6024101/3J	Lifter Washer - Middle		
BU6024101/3K	Lifter Washer - Upper		
BU6024101/3L	Cushion Plate		
BU6024101/3M	Damper Plate		
BU6024101/4	Guide Ring	1	4
BU6024101/5	Closing Spring	1	5
BU6024101/5A	Damping Spring		
BU6024101/6	MHT Nut	1	6
BU6024101/6A	Split Pin		
BU6024101/6B	Washer		

Note ***Servicing is by unit replacement only. When ordering spares, quote part number: BU6024101.***

4.5.7 Delivery Valve Assembly

Part Number: BU6024102 (JFD Order Code: GE013)

Figure 16 Delivery Valve Assembly

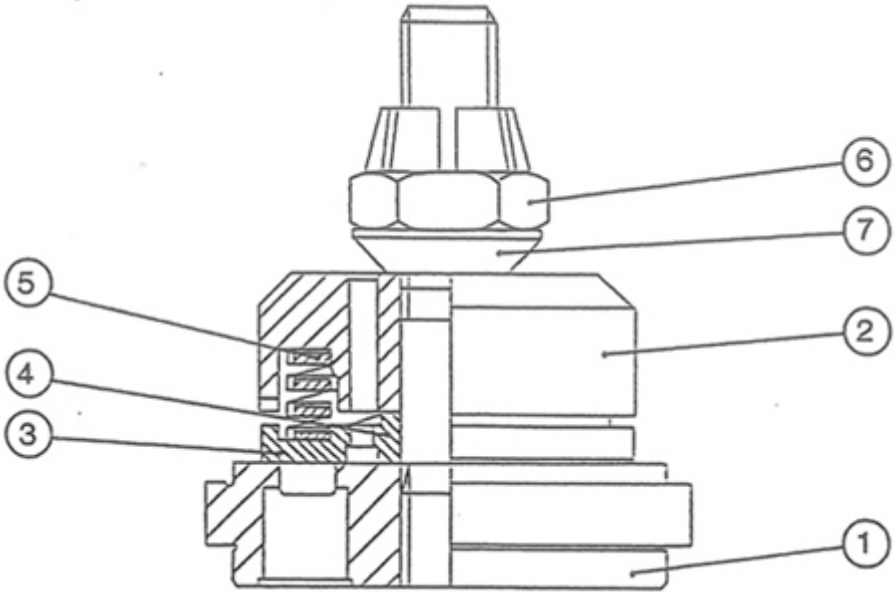

Table 12 Delivery Valve Assembly Parts List

Part No.	Description	Qty	Ref.
BU6024102/1	Seat Assy Comprising:-	1	1
BU6024102/1A	Seat		
BU6024102/1B	Centre Bolt		
BU6024102/1C	Locking Device		
BU6024102/1D	Locating Pin		
BU6024102/1E	Locating Pin		
BU6024102/2	Guard Assy	1	2
BU6024102/2A	Guard		
BU6024102/2B	Centre Bolt		
BU6024102/2C	Locking Device		
BU6024102/2D	Locating Pin		
BU6024102/2E	Locating Pin		
BU6024102/2F	Buffer Plate		
BU6024102/2G	Plate Assy		
BU6024102/3	Valve Ring	1	3
BU6024102/3A	Guide Plate		
BU6024102/3B	Rivet		
BU6024102/3C	Plate Assy		
BU6024102/3D	Spring Plate		
BU6024102/3E	Spring Plate		
BU6024102/3F	Lifter Washer - Lower		

Part No.	Description	Qty	Ref.
BU6024102/3G	Lifter Washer - Middle		
BU6024102/3H	Lifter Washer - Upper		
BU6024102/3J	Cushion Plate		
BU6024102/3K	Damper Plate		
BU6024102/4	Guide Ring	1	4
BU6024102/5	Closing Spring	1	5
BU6024102/5A	Damping Spring		
BU6024102/6	MHT Nut	1	6
BU6024102/6A	Split Pin		
BU6024102/7	Washer	1	7

Table 13 Dimensions & Wear Limits - Cylinder Line 2 5/8” Diameter

Item	Design Size Inches (mm)	Wear Limit Inches (mm)	*Maximum Total Clearance (mm)
Cylinder Bore Diameter	2.625/2.6257 (66.675/66.692)		
Piston Diameter	2.563/2.5612 (65.1/65.05)		
Guide Ring Radial Thickness	0.250 (6.35)	0.23 (5.84)	
Guide Ring Axial Thickness	0.362 (9.195)		0.015 (0.38)
Guide Ring Groove Width	0.375/0.3764 (9.525/9.56)		
Guide Ring End Gap	0.066 (1.6764)	0.081 (2.06)	
Piston Ring Radial Thickness	0.312 (7.925)	0.156 (3.96)	
Piston Ring Axial Thickness	0.241 (6.121)		0.012 (0.305)
Piston Ring Groove Width	0.250/0.2514 (6.35/6.385)		
Piston Ring End Gap	0.017 x 2 (0.432 x 2)	0.032 x 2 (0.813 x 2)	
Pressure Packing Rings	Replace when segment ends butt.		
Wiper Packing Rings	Replace when segment ends butt.		
Gudgeon Pin Diameter	1.0002/1.0000 (25.41/25.40)	0.9998 (25.39)	

Item	Design Size Inches (mm)	Wear Limit Inches (mm)	*Maximum Total Clearance (mm)
Small End Bearing Diameter	1 in Nom Bore	-	
Crosshead Diameter	3.9975/3.997 (101.53/101.52)	3.995 (101.47)	0.006 (.152)
Crosshead Guide Bore	4.000/4.001 (101.6/101.62)	4.003 (101.67)	
Piston Rod Diameter	1.000/.999 (25.4/25.375)	0.996 (25.298)	

Note ***Check clearances cold.***

Table 14 Torque Loading Chart - Second Stage Cylinder (2 5/8" Diameter)

Item	Loading	
	LB/FT	(KG/M)
Cylinder Head Socket Head Cap Screws	55	(7.6)
Valve Cover Studs	18	(2.49)
Valve Cover Nuts	30	(4.15)
Valve Nuts	14.5 - 17.8	(2.0 - 2.45)
Pressure Packing Nuts	24	(3.32)
Wiper Packing Caphead Screws	4	(0.55)
Crosshead Guide/Crankcase Nuts	30	(4.15)
Wiper Packing Chamber/Crosshead Guide Studs	35	(4.84)
Wiper Packing Chamber/Crosshead Guide Nuts	30	(4.15)
Pressure Packing Chamber/Wiper Packing Chamber Studs	35	(4.84)
Pressure Packing Chamber/Wiper Packing Chamber Nuts	30	(4.15)
Cylinder/Pressure Packing Chamber Studs	35	(4.84)
Cylinder/Pressure Packing Chamber Nuts	30	(4.15)
Piston Socket Head Screw	20	(2.33)
Water Manifold Studs	13	(1.80)
Water Manifold Nuts	10	(1.38)

4.6 Gauge Panel

Table 15 Gauge Panel Assembly: A651 61

Part No.	Description	Qty	Ref.
42751/1	Gauge Panel	1	1
	Pressure Gauge 0 - 1000 psi	1	GP269
	Pressure Gauge 0 - 1000 psi	1	GP269

Part No.	Description	Qty	Ref.
	Pressure Gauge 0 - 1600 psi	1	GP268
	Pressure Gauge 0 - 160 psi	1	GP258

Figure 17 Gauge Panel Assembly

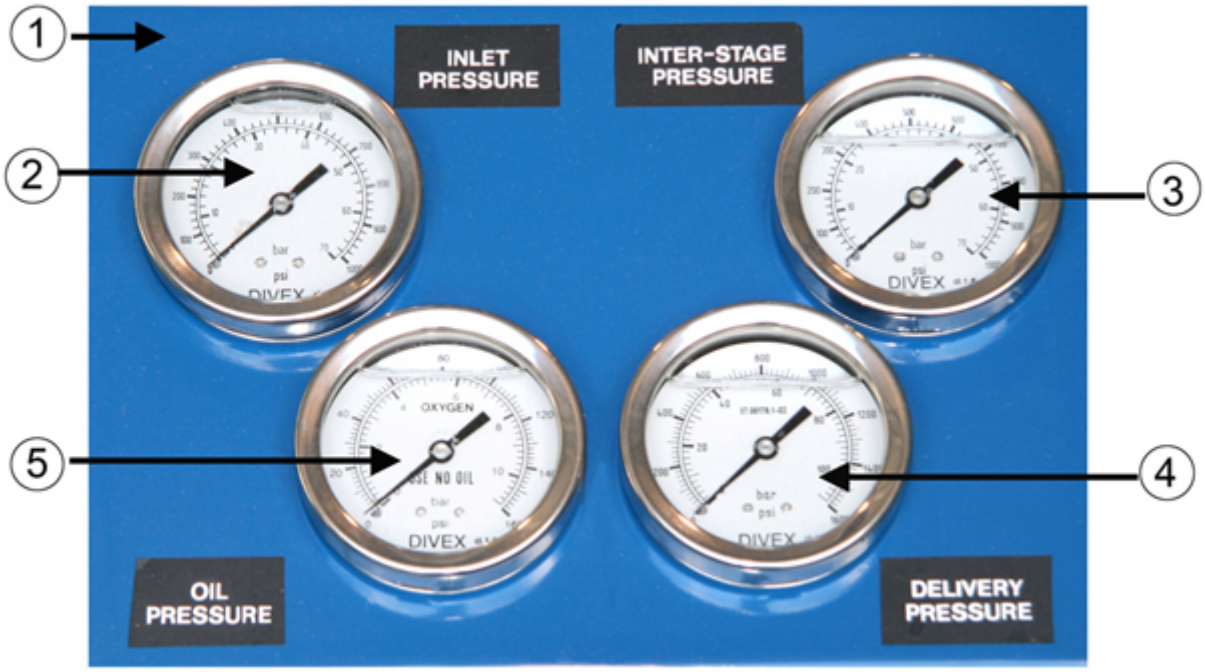

4.7 Cooler Assembly

4.7.1 Description

The cooler assembly comprises two vertically mounted shell and tube cooler units with an associated moisture separator assembly.

Each cooler assembly comprises a mild steel water jacket containing ten tungum cooler tubes. The tubes are brazed into end caps and the water jacket is welded to the end caps to produce a complete assembly. Mild steel end plates, sealed by gaskets, are bolted to the cooler body and incorporate the inlet and delivery connections.

4.7.2 Dismantling

1 Drain work from cooler casings and remove interconnecting pipework.

2 Remove bolts holding coolers to brackets and remove coolers.

3 Remove moisture separating receiver from cooler.

4 Unscrew moisture separator header block from cooler.

5 Remove bolts and withdraw end plates. Recover gaskets.

4.7.3 Servicing

1 Clean and examine all parts for damage or corrosion and replace as necessary.

2 Examine cooler tubes for internal cleanliness and clean with a wire brush as necessary. Servicing of the cooler body is by unit replacement only.

3 Flush water passages to remove any sediment. If there is any evidence of scale formation, treat with a descaling compound.

4.7.4 Assembly

1 Fit end plates to cooler body, ensuring correct location of gaskets. Tighten bolts to a torque of 100 lb/ft (14.0 Kg.m).

2 Fit moisture separator head block and moisture separating receiver to cooler.

3 Fit coolers to cooler brackets.

4 Fit interconnecting pipework and fill system with water.

4.7.5 First Stage Cooler Assembly

Part Number: A65151 (JFD Order Code: GE151)

Figure 18 Stage 1 Cooler Assembly

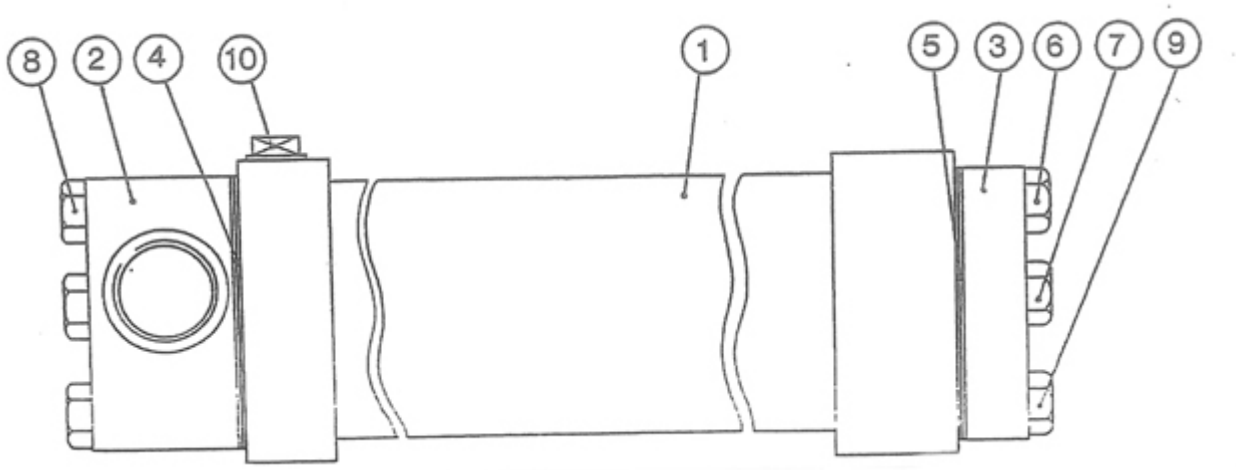

Table 16 First Stage Cooler Assembly Parts List

Part No.	Description	Qty	Ref
W14916/6	Cooler Body Assembly	1	1
40923/2	Cooler End Plate (Inlet)	1	2
40922/1	Cooler End Plate (Outlet)	1	3
40925	End Plate Gasket (Inlet)	1	4
40924	End Plate Gasket	1	5
BL9/22	Bolt 5/8” UNC x 1 3/4” Long	2	6
BL9/21	Bolt 5/8” UNC x 1 1/2” Long	1	7

Part No.	Description	Qty	Ref
BL9/24	Bolt 5/8” UNC x 3 1/4” Long	5	8
BL9/65	Bolt 5/8” UNC x 2 1/8” Long	2	9
4617/7	Plug	1	10

4.7.6 Second Stage Cooler Assembly

Part Number: A65152 (JFD Order Code: GE152)

Figure 19 Stage 2 Cooler Assembly

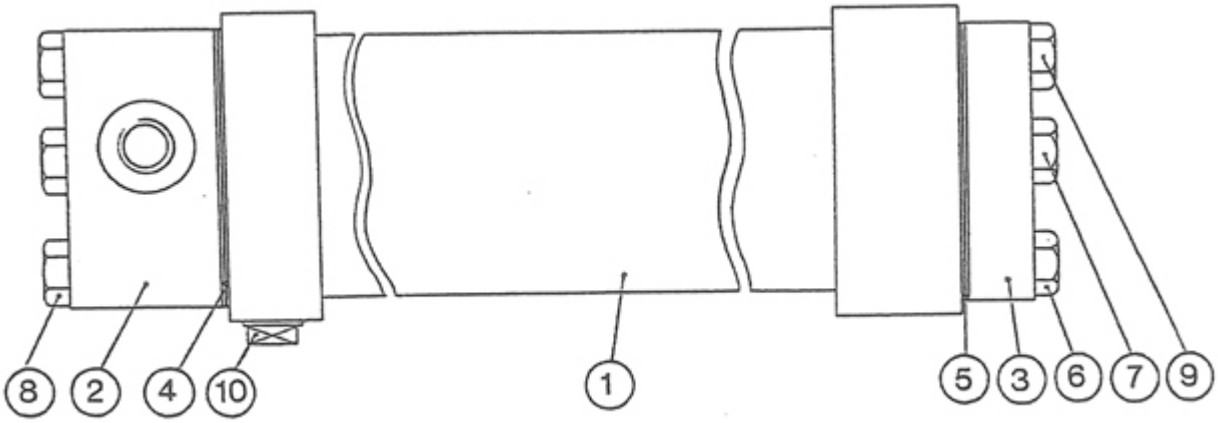

Table 17 Second Stage Cooler Assembly Parts List

Part No.	Description	Qty	Ref
W14916/7	Cooler Body Assembly	1	1
40923/3	Cooler End Plate (Inlet)	1	2
40922/1	Cooler End Plate (Outlet)	1	3
40925	End Plate Gasket (Inlet)	1	4
40924	End Plate Gasket	1	5
BL9/22	Bolt 5/8” UNC x 1 3/4” Long	2	6
BL9/21	Bolt 5/8” UNC x 1 1/2” Long	1	7
BL9/24	Bolt 5/8” UNC x 3 1/4” Long	5	8
BL9/65	Bolt 5/8” UNC x 2 1/8” Long	2	9
4617/7	Plug	1	10

4.8 Crankcase Assembly

4.8.1 Description

The crankcase is manufactured in cast iron with large diameter cast iron bearing housings mounted on spigots at each end. Two cast iron side cover plates are provided to enable

internal access to the crankcase. Cast into one side cover plate are the oil filler and crankcase breather bosses.

The double throw crankshaft is manufactured in cast iron and is mounted on steel backed white metal bushes. Each end bearing housing contains two bearing brushes and a thrust washer, located by dowel, which prevents excessive crankshaft end float. An oil seal located in the drive end bearing housing prevents lubrication oil leakage.

The centre bearing housing is split along the horizontal centre line with each half mounting a steel backed white metal half-bearing which locates on the crankshaft centre journal. The complete assembly is bolted together and is mounted in the central bore of the crankcase and secured by a locking screw.

The connecting rods are machined from steel forgings. Each big end bearing is a single steel backed white metal shell which is split along the horizontal centre line. Each small end bearing is a single needle roller bearing, pressed into position.

Lubricating oil is drawn from the sump and is pressure fed to all the crankshaft bearings. The small end bearings are lubricated by splash.

The oil pump is mounted on the main bearing housing and is driven by a coupling located on the end of the crankshaft. The pump discharges through a full flow canister type oil filter to the bearings. An adjustable oil pressure control valve is mounted adjacent to the oil pump and controls the lubrication system pressure and flow.

Figure 20 Crankcase Assembly End View

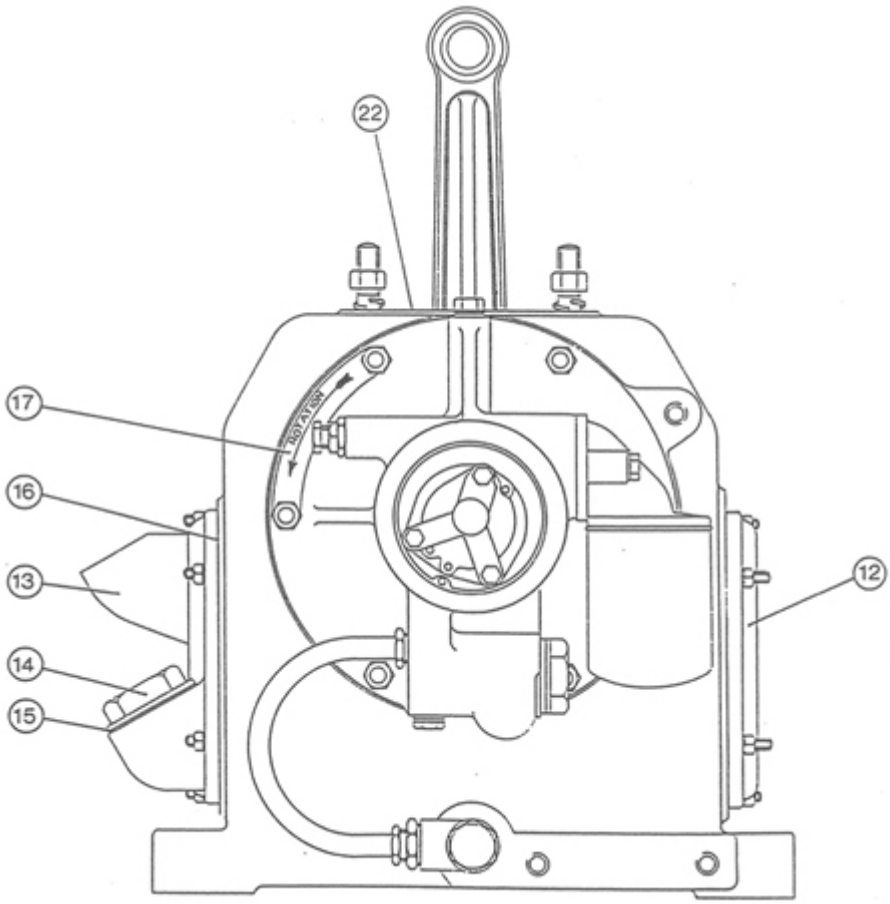

Figure 21 Crankcase Assembly Side View

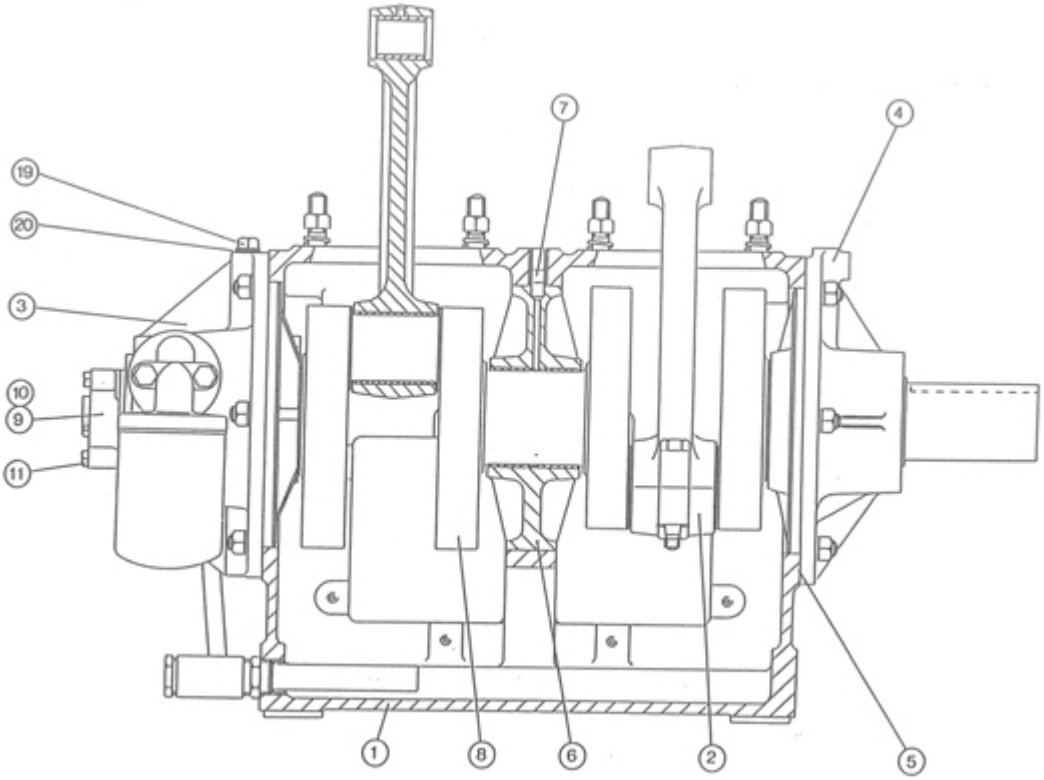

Table 18 Crankcase Assembly Parts List

Part No.	JFD Order Code	Description	Qty	Ref.
U8010101	DX4107	Crankcase Unit Comprising	1	1
25000	-	Crankcase	1	-
SL12/44	GC20448	Stud 1/2” UNC	8	-
4919/59	GE21033	Nut 1/2” UNC	8	-
2547/11	DX9931	Spring Washer 1/2” I/D	8	-
SL12/10	GE117	Stud 7/16” UNC	12	-
4919/58	GC374	Nut 7/16” UNC	12	-
2547/10	GE118	Spring Washer 7/16” 1/DD	12	-
SL12/1	GE145	Stud 1/4” UNC	16	-
SL12/2	GE146	Stud 1/4” UNC	4	-
4919/56	GE147	Nut 1/4” UNC	20	-
2547/7	GE148	Spring Washer 1/4” I/D	20	-
U7510102	DX1166	Connecting Rod Unit	2	2
XU1410005	GC086	Main Bearing Housing (Non-Drive End)	1	3
U1410003	GC093	Main Bearing Housing (Drive End)	1	4
8602	GE023	Bearing Housing	2	5
U1440001	GC096	Centre Bearing Housing	1	6

Part No.	JFD Order Code	Description	Qty	Ref.
8596	-	Locking Screw 1/4” BSP	1	7
8562	GC085	Crankshaft	1	8
14008	GE019	Oil Pump	1	9
14025	GE024	Oil Pump Gasket	1	10
BL9/31	GC20449	Bolt 1/4” UNC	3	11
10179	-	Side Cover Plate	1	12
15177/5	-	Side Cover Plate (Breather Side)	1	13
11479/8	GC20435	Oil Filter Plug 1 1/2” Plug	1	14
40912/1	GC101	Sealing Washer	1	15
8601N	GE026	Side Cover Plate Gasket	2	16
9340/1	GC20436	Instruction Plate	1	17
11479/2	-	Plug 1/4” BSP	1	19
6793/3	GC102	Sealing Washer 7/8” O/D	1	20

4.8.2 Dismantling

Having dismantled down to removal of the cylinders proceed as follows:

1 Remove drain plug and drain oil from crankcase.

2 Remove crankcase side covers and recover gaskets and sealing washers.

Note ***Remove unloaders and manifold if fitted to side cover.***

3 Bend back tab washers and unscrew connecting rod big end bolts. Remove bearing caps and withdraw rods.

Note ***Care must be taken to avoid damage to crankshaft journals and big end bearings when withdrawing rods.***

4 Before proceeding with further dismantling, measure and record total axial movement of crankshaft.

5 Remove crankshaft key and withdraw flywheel.

6 Remove oil pump and withdraw pump coupling.

7 Remove drive end bearing housing nuts and withdraw housing, taking care not to damage oil seal. Recover gasket.

8 Remove oil suction pipe and fittings from side of main bearing housing and base of crankcase.

9 Remove main bearing housing nuts and withdraw housing. Recover gasket.

10 Remove plug in top face of crankcase. This plug is located on the centreline between the two cylinder mouths.

Note ***In some models, this plug is replaced by a connection in the compressor lubrication system.***

11 Insert screwdriver into plug hole and remove centre bearing locking screw.

12 Withdraw crankshaft, complete with centre bearing housing, giving suitable support through the side access apertures.

13 Remove split pins and nuts, separate centre bearing housing and remove from crankshaft centre journal. Each bearing half is located by a lug which engages in a recess in the housing and can be removed by hand.

Note ***Each half of the bearing housing is stamped on one face only to ensure correct assembly.***

14 Remove each end thrust washer, which is located within each bearing housing by a dowel.

15 The main bearings each consist of two steel backed white metal split rings pressed into the cast iron housing. These bearings can either be pressed out or driven out with a suitable mandrel.

16 Each small end bearing consists of a pressed in needle roller bearing. This bearing can either be pressed our or driven out using a suitable mandrel.

17 Each big end bearing is located in the connecting rod by lugs and can easily be removed by hand.

4.8.3 Servicing

1 Wash all components parts of the crankcase in paraffin. Examine each part for signs of wear or damage and renew as necessary.

2 Examine rubber oil seal in drive end bearing housing for signs of wear or damage. Renew is damaged in any way.

3 Inspect main bearing bushes, centre bearing and big end shells for scoring, pitting, or signs of wear and renew if damaged or worn beyond the limits given in the table of wear limits. If new bushes are to be fitted, they must be pressed or driven in with a suitable mandrel.

Note ***Care must be taken to ensure that new bushes are pressed in squarely. There should be a gap of approximately 1/4 inch (6.35mm) between the bushes when in place and bushes must not cover lubrication oil passageways. Refer to diagrams of bearing housings for correct position.***

4 Examine crankshaft end thrust washers for signs of wear or damage. Replace if damaged or worn or if crankshaft end float exceeds the limits given in the table of wear limits.

5 To service oil pressure relief valve, unscrew valve adjusting screw and withdraw spring and valve from the main bearing housing.

6 Clean all parts in paraffin, examine for signs of obvious damage and replace as necessary.

7 Assemble valve. Adjust oil pressure setting using adjusting screw as per picture below, when assembly is complete.

Figure 22 Oil pressure adjusting

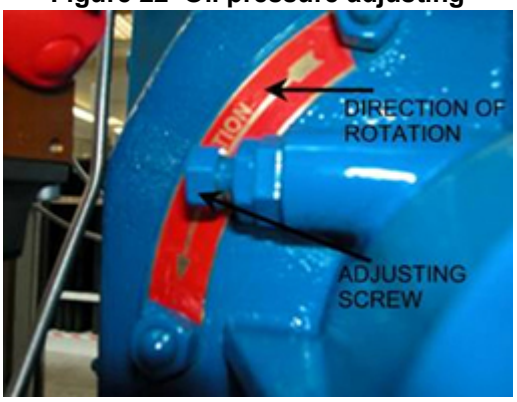

8 Examine small end needle roller bearings for obvious signs of damage or wear and replace as necessary. If new bearings are necessary, they must be pressed in using the correct installation tool. Care must be taken to ensure that the bearings are pressed in squarely.

Note ***For correct fitting procedure, refer to diagram of connecting rod.***

9 Examine oil passageways and ensure that they are clear of any obstruction.

10 To service oil pump, remove two screws (one screw on earlier models) from inside face of until and separate rotor body from cover.

11 Examine rotor, rotor body and shaft driving slot for wear or damage. Repair is by unit replacement only.

12 If oil pump is serviceable, assemble using jointing compound such as Hermetite Silicon RTV Instant Gasket (Part No.41438) on sealing face between rotor body and cover, ensuring a light even coat over face and around the three mounting bolt holes to prevent oil leakage.

Note ***Sealing faces must be clean and dry before application of jointing compound. Jointing compound must not penetrate rotor chambers.***

13 Examine crankshaft for signs of wear of damage. Replace if damaged or worn below limits given in the table of wear limits.

4.8.4 Assembly

1 Lightly oil all bearing surfaces.

2 With each half shell located correctly in its recess, refit centre bearing housing to crankshaft centre journal. Tighten nuts to value given in torque loading chart and fit new split pins.

Note ***To ensure correct assembly of bearing housing, stamped faces must be adjacent to each other.***

3 Refit crankshaft, giving suitable support through the side access apertures.

Note ***Care should be exercised to prevent damage to main bearings when fitting crankshaft.***

4 Replace centre bearing locking screw. Ensure a positive location of the locking screw into the recess in the centre bearing housing and lock down firmly.

5 Replace plug in top face of crankcase, ensuring an oil tight seal.

Note ***In some models, replace connection in compressor lubrication system.***

6 Place new gasket over studs and refit main bearing housing at the oil pump end. Ensure crankshaft end thrust washer is correctly positioned by dowel. Tighten nuts to the figure given in torque loading chart.

7 Replace oil suction pipe and fittings to bearing housing and crankcase.

8 Place new gasket over studs and refit drive end bearing housing. Ensure crankshaft end thrust washer is correctly positioned by dowel. Tighten nuts to the figure given in torque loading chart.

Note ***Care should be exercised to prevent damage to lip of oil seal when fitting. Smear oil on seal lip before fitting to prevent friction damage on initial start up.***

9 Check crankshaft for freedom of rotation and that the maximum end float does not exceed for limit given in the table of wear limits.

10 Fit big end bearings into connecting rods and caps. Ensure that each bearing is fitted into its half housing with lug correctly engaged in the recess.

11 Attach connecting rods and caps to crankshaft. Fit bolts, nuts and new tab washers. Tighten nuts to figure given in torque loading chart and bend over tab washers to lock nuts in position. Check rods for freedom of rotation on the crankshaft.

Note ***Rods and caps are stamped to ensure correct assembly. Stamped faces must be adjacent to each other.***

12 Using new or serviceable gaskets and sealing washers, refit side covers. Tighten bolts to figure given in torque loading chart. Replace unloaders and manifold if fitted.

Note ***Ensure correct position of oil filler and crankcase breather bosses.***

13 Replace flywheel and refit key.

14 Refit oil pump coupling to end of crankshaft.

15 Fill oil pump with lubricating oil and using a serviceable grafitoil gasket, fit the oil pump with the drive correctly engaged. Tighten bolts to figure given in torque loading chart.

Note ***Ensure recess in oil pump body locates on dowel.***

16 Refit oil drain plug and refill crankcase with the correct grade of lubrication oil.

17 Ensure that the pulleys of the drive motor and the compressor are in full alignment. Fit the drive belts and adjust the belt tension.

18 Ensure direction of rotation is correct on start up as indicated on oil pump end of crankcase.

4.8.5 Main Bearing Housing Unit (Non-drive End)

Part Number: XU1410005 (JFD Order Code: GC086)

Figure 23 Main Bearing Housing Unit (Non-drive End)

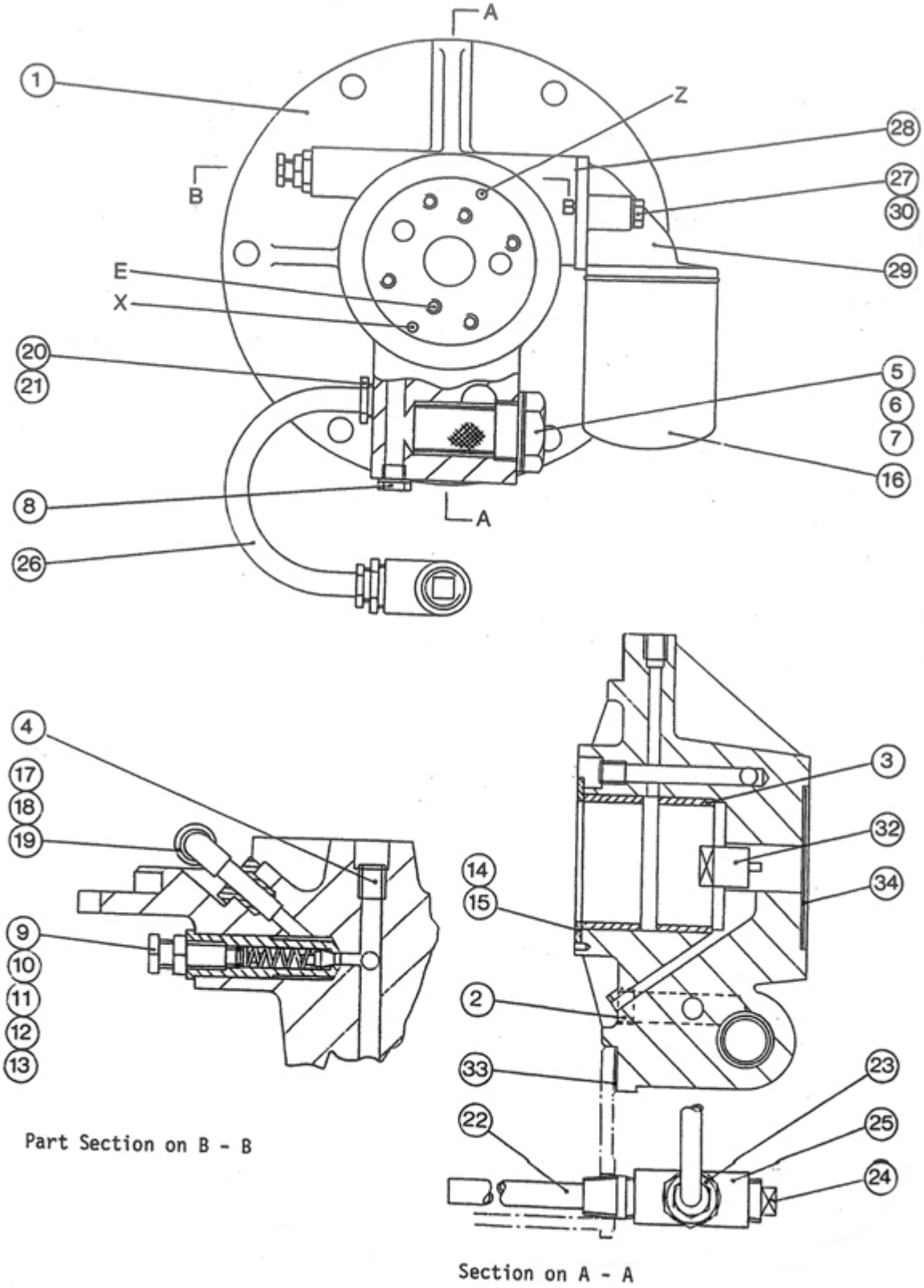

Table 19 Main Bearing Housing Unit (Non-drive End) Parts List

Part No.	Description	Qty	Ref
W41418	Main Bearing Housing	1	1
14745A	Plug 1/2” BSP	1	2
8586	Main Bearing Bush	2	3
85008	Plug 1/4” BSP	1	4
12935	Oil Suction Filter	1	5
6793/8	Seal Ring	1	6
11479/6	Plug 1” BSP	1	7
11479/2	Plug 1/4” BSP	1	8
41102	Oil Bypass Valve	1	9
SP1/9	Spring	1	10
9017/10/75	‘O’ Ring BS Size 010	1	11
4726/31	Locknut 1/4” BSP	1	12
10370	Adjusting Screw	1	13
10220	Dowel	1	14
8598	End Thrust Washer	1	15
Y30048	Oil Filter	1	16
10148/6	Tubing Nut 3/8” T	1	17
10147/6	Tubing Sleeve 3/8” T	1	18
W42223	Oil Bypass Pipe	1	19
10148/8	Tubing Nut	2	20
10232/3	Dowel Pin 5/32” x 1” Long	1	20A
10147/7	Tubing Sleeve	2	21
W15573/1	Oil Feed	1	22
10870/4	Adaptor 3/4” BSP x 1/2” T	1	23
4617/5	Plug 3/4” BSP	1	24
9472/5	Tee 3/4” BSP	1	25
9624	Pipe 1/2” O/Dia x 1 1/2” Long	1	26
BL9/51	Bolt 3/8” UNC x 2” Long	2	27
14016	Gasket	1	28
W43600	Filter Mounting	1	29
2547/6	Spring Washer	2	30
14792	Oil Pump Coupling	1	32
8602	Gasket - Bearing Housing	1	33
14025	Gasket - Oil Pump	1	34

1 Fit Dowel Pin (20A) at position ‘X’ for standard rotation (clockwise looking on driving end of compressor).

2 Fit Dowel Pin (20A) at position ‘Z’ for non-standard rotation (anti-clockwise looking on driving end of compressor).

3 On standard rotation gas compressors with pressurised crankcases, Hole ‘E’ must be plugged if it breaks into the drain recess. This does not apply to bearing housings fitted to non-standard rotation gas compressors.

4 Fit Plug (2) with Loctite.

4.8.6 Main Bearing Housing Unit (Drive End)

Part Number: U1410003 (JFD Order Code: GC093)

Figure 24 Main Bearing Housing Unit (Drive End)

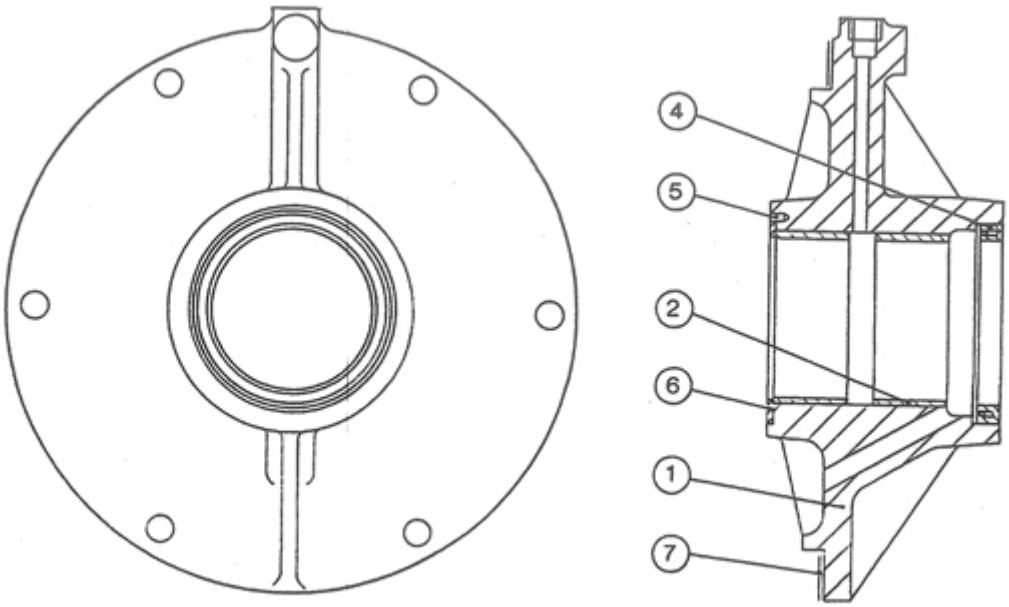

Table 20 Main Bearing Housing Unit (Drive End)

Part No.	JFD **Order Code**	**Description**	**Qty**	**Ref**
25001	GC094	Main Bearing Housing	1	1
8586	GE016	Main Bearing Bush	2	2
8624	GE042	Main Oil Seal	1	4
10220	GC095	Dowel 3/16” Dia x 1/4” Long	1	5
8598	GE018	End Thrust Washer	1	6
8602	GE023	Gasket	1	7

4.8.7 Centre Bearing Housing Unit

Part Number: U144 00 01 (JFD Order Code: GC096)

Figure 25 Centre Bearing Housing Unit

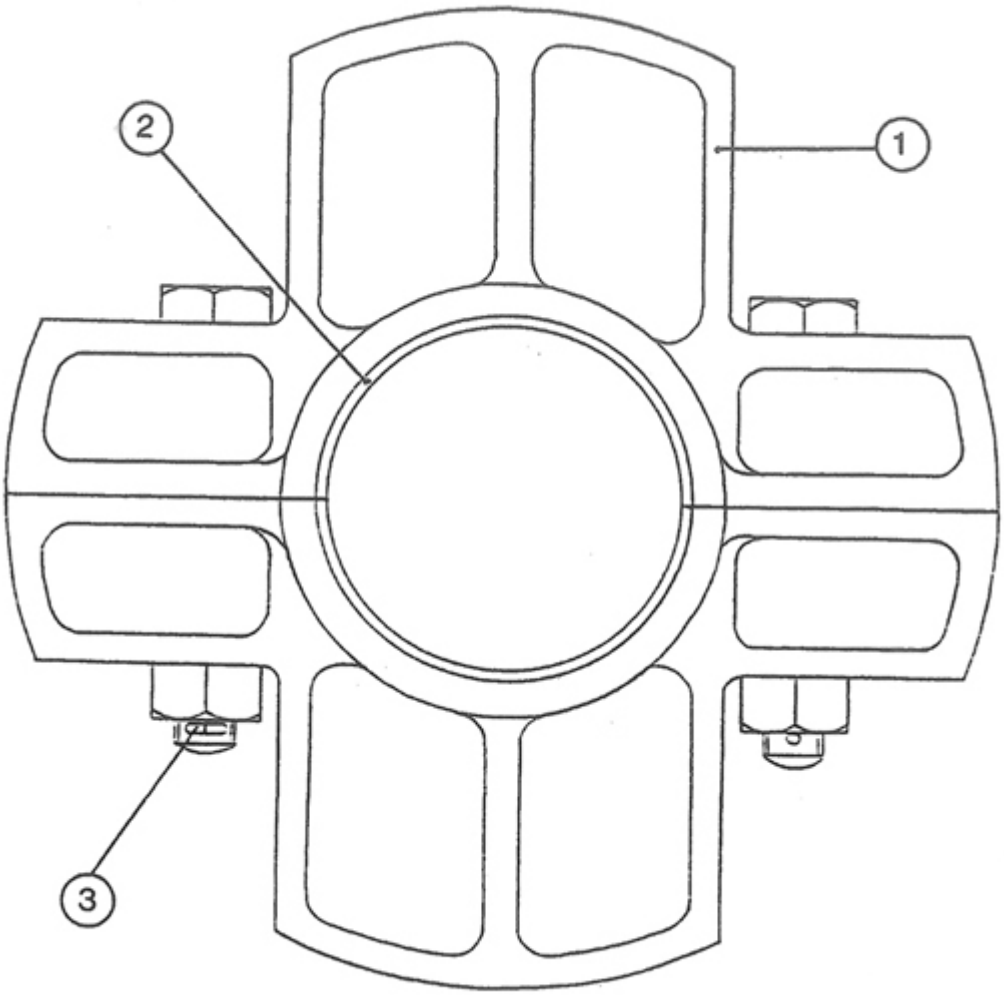

Table 21 Centre Bearing Housing Unit Parts List

Part No.	JFD Order Code	Description	Qty	Ref
W8563	GC177	Centre Bearing Housing Assy Complete with:	1	1
25026	-	Bolt	2	
4919/48	GC20450	Nut	2	
8582	GE017	Centre Shell Bearing	1 pr	2
4829/8	GC025	Split Pin	2	3

4.8.8 Connecting Rod Unit

Part Number: U7510102 (JFD Order Code: DX1166)

Figure 26 Connecting Rod Unit

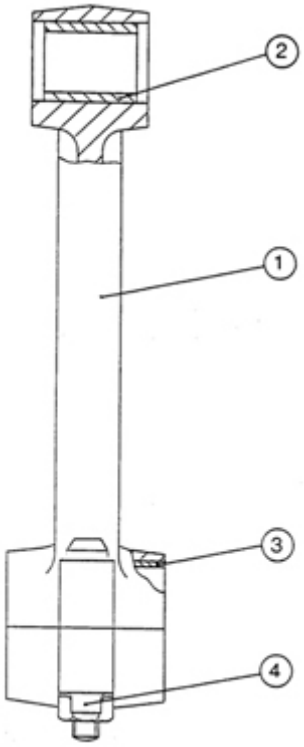

Connecting Rod Unit Parts List

Part No.	JFD Order Code	Description	Qty	Ref
9166/4	-	Connecting Rod complete with:	1	1
Y08559	GE133	Bolt	2	
4919/47	GE132	Nut 7/16” UNF	2	
42567	GE002	Needle Bearing	1	2
10801	GE014	Big End Bearing	1 pr	3
8590	GE015	Tab Washer	2	4

Note ***Needle bearing to be pressed into rod using installation tool number T28872 (JFD Order Code: DX1976). The stamped end (end with identification marks) must be against the angled shoulder of installation tool.***

Connecting rod tab washers may need to be filed to fit.

4.8.9 Oil Pump

Part Number: GE019

Figure 27 Oil Pump

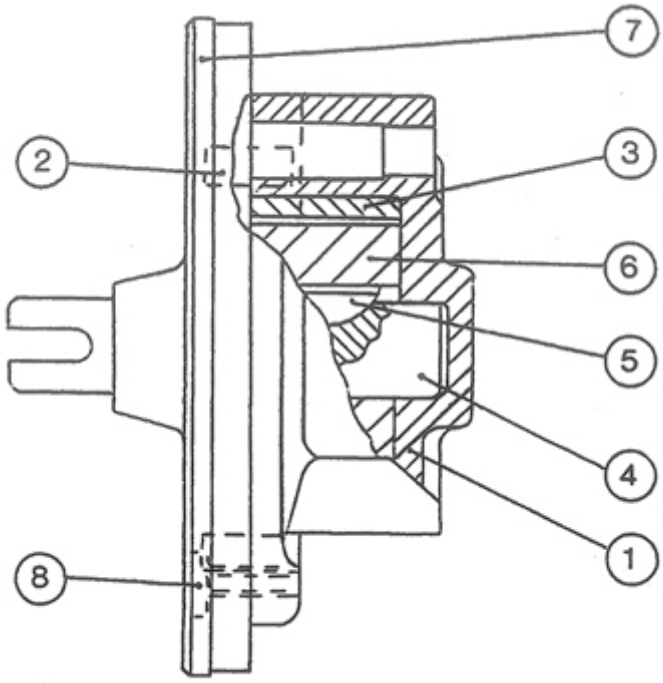

Table 22 Oil Pump Parts List

Description	Qty	Ref
Body	1	1
Dowel	1	2
Annulus	1	3
Shaft	1	4
Key	1	5
Rotor	1	6
Cover	1	7
Screw	1	8

Note ***Above parts are for identification only. Repair is by unit replacement only. When ordering spares, quote part no. GE019.***

4.8.10 Replaceable Cartridge Oil Filter Assembly

Part Number: 13320MK (JFD Order Code: GC092)

Figure 28 Replaceable Cartridge Oil Filter Assembly

Below shown is the replacement oil filter cartridge for the oil filter assembly.

4.8.10.1 Replacement Oil Filter Cartridge

Part Number: 98262.1009 (JFD Order Code: CR98262.1009)

Figure 29 Replacement Oil Filter Cartridge

Table 23 Dimensions & Table of Wear Limits - Crankcase Assembly

Part No.	JFD Order Code	Description	Qty	Ref
13320/3	GE044	Element AP106	1	1
13320/9	GE045	Seal - Centre Bolt MIC 4096	1	2
13320/11	GE046	Seal - Element Top MIC 8260	1	3
13320/14	*	Seal - Head MIC 10977	1	4
13320/15	GE048	Seal - Sump Base MIC 8396	1	5

Item	Design Size Inches (mm)	Wear LImit- Inches (mm)	*Maximum Total Clearance In (mm)
Crankshaft Main Journals	2.750/2.7495 (69.85/69.827)	2.748 (69.79)	0.009 (0.229)
Main Bearings	2.755/2.752 (69.98/69.90)	2.757 (70.03)	
Crankpin Diameter	2.000/1.9995 (50.80/50.78)	1.9985 (50.76)	0.006 (0.152)
Big End Bearing	2.002/2.0025 (50.85/50.86)	2.0055 (50.94)	
Crankshaft End Thrust Washers	0.126/0/124 (3.20/3.15)	0.115 (2.92)	0.052** (1.32)

*Maximum clearance can be obtained before either of the mating parts has reached its wear limit, but either one of both mating parts should be replaced as soon as the maximum clearance given in the above table is reached.

**Crankshaft end float.

Table 24 Torque Loading Chart - Crankcase Assembly

Item	Loading	
	LB/FT	(KG/M)
Centre Main Bearing Nuts	30	(4.15)
End Main Bearing Studs	28	(3.86)
End Main Bearing Nuts	24	(3.32)
Connecting Rod Nuts	30	(4.15)
Side Cover Door Bolts	6	(0.83)
Oil Pump Bolts	10	(1.38)

4.9 Unloader Valve Assembly

Part Number: G12586/2 (JFD Order Code: GC10526)

Figure 30 Unloader Valve Assembly

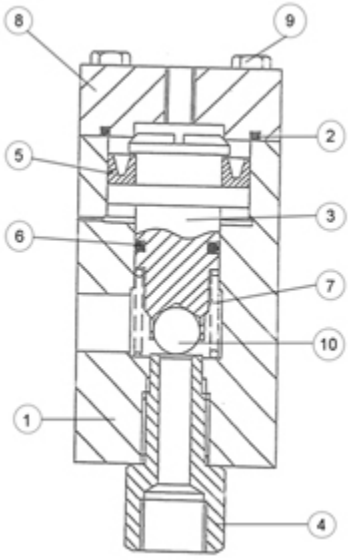

4.9.1 Operation

To reduce starting torques and to avoid overloading the starter controlling the electric motor, it is necessary to start the compressor in an unloaded condition. This is achieved by the use of unloader valve assemblies. Each stage of compression is controlled by an unloader valve. The first stage unloader valve responds to the oil pressure of the compressor lubrication system and subsequently controls the operation of the remaining unloaders if the machine has more than one stage of compression.

When the compressor is started, the oil pressure rises until it overcomes the compression spring to push the piston assembly down onto its seat, thus shutting the valve and allowing the air pressure to rise to its operating level. On a multi-stage compressor, this rise in air pressure depresses the piston assembly of the next stage unloader valve, closing the valve and allowing the next stage air pressure to rise. This operation is repeated for each stage of compression.

When the compressor is switched off, the lubricating oil pressure falls, allowing the first stage air pressure to unseat the piston assembly and open the valve. This action allows the control air to be dissipated from the next stage unloader valve which then opens. This operation is repeated for each stage of compression. Simultaneously to the unloading action, condensed moisture is discharged from the moisture separators to the drain points via the unloader valves.

4.9.2 Description

The unloader body, top cover and piston are manufactured in aluminium alloy. A nylon ball pressed into the piston covers the stainless steel seat. An o-ring and u-ring seal and the piston assembly which is spring laden to lift the ball off the seat when at rest.

4.9.3 Dismantling

1 After ensuring that all pressure is dissipated from system, remove top and base connections from unloader valve. Remove valve from manifold and recover gasket.

2 Remove four bolts from top cover, lift off cover and recover o-ring. Lift piston assembly from body and recover spring.

4.9.4 Servicing

1 Inspect all o-ring and u-ring seals for signs of wear or damage and replace as necessary.

2 Inspect value seat body bores and piston assembly for signs of scoring, wear or damage and replace as necessary.

Note ***The nylon ball deforms to produce the sealing face over the valve seat. This deformation is normal and is not cause for replacing the piston assembly.***

3 Ensure that 1.5mm diameter vent hole is not obstructed. This vent prevents pressure build up under the piston and if blocked will affect the performance of the valve.

4 Examine spring for signs of fatigue or wear and replace as necessary.

4.9.5 Assembly

1 Fit o-ring and u-ring seals to piston assembly. Lightly oil bores in body, place spring in position and fit piston to body. Ensure freedom of movement of piston in bore.

2 Replace top cover, ensuring correct location of o-ring.

3 Fit unloader to manifold, using a new gasket if necessary. Ensure gasket sealing faces are clean and smooth. Replace all connections.

Table 25 Unloader Valve Assembly Parts List

Part No.	Description	Qty	Ref.	Other Part No.
42712/2	Body	1	1	DX9334
MR0495-30F	O-Ring	1	2	GE039
42713/2	Valve Assembly	1	3	GE020
42714	Valve Seat	1	4	GC104
42715/116F	U-Ring Seal	1	5	GC065
MR0245-30N	O-Ring Seal	1	6	GC064
42716/1	Spring	1	7	GE021
42717	Cover	1	8	DX493
MCB10/50	Bolt	4	9	GC373
	Ball	1	10	

4.10 Relief Valves

Each relief valve comprises a stainless steel ball covering a hard seating, retained in a tubular carrier and loaded by an adjustable spring.

Relief valves are set at the factory and do not need adjusting. Servicing is by unit replacement only.

Figure 31 First Stage Relief Valve

Part Number: 42682/5
(JFD Order Code: GC134)

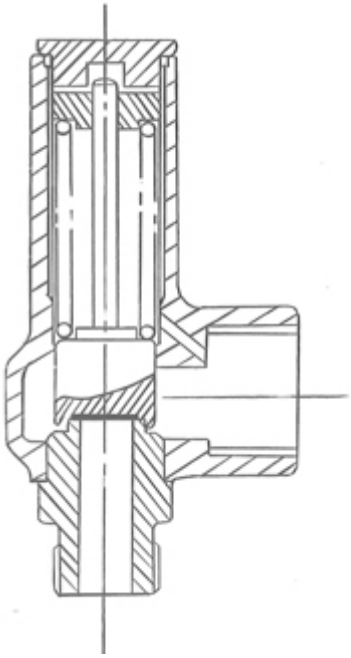

Pressure Setting PSI (Bar)	725 (50.0)
Part Number	42682/5

Figure 32 Second Stage Relief Valve

Part Number: 42682/6
(JFD Order Code: GE082)

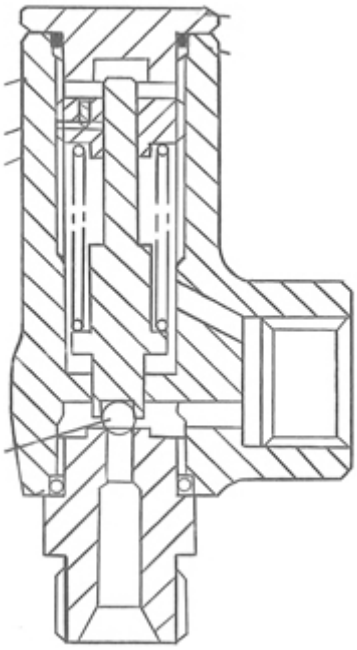

Pressure Setting PSI (Bar)	1595 (110.0)
Part Number	42682/6

4.10.1 Cooling Water Relief Valve

Part Number: 41097/3 (JFD Order Code: GC131)

Figure 33 Cooling Water Relief Valve

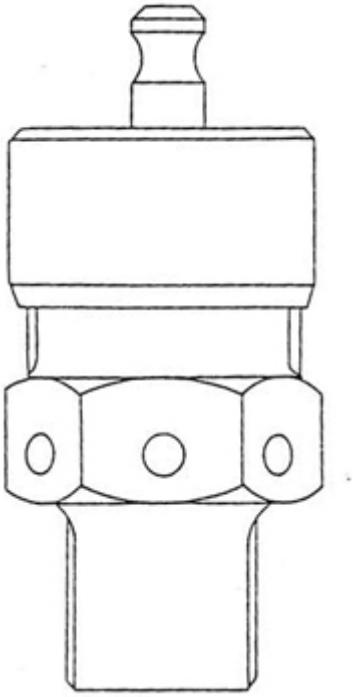

4.10.2 Description

The cooling water relief valve comprises a brass body containing a disc valve which covers the seat and is loaded by a spring. The valve is usually located on the cooler casing and is set at 80 psi. The valve is set at the factory and should not need any adjustment.

4.10.3 Servicing

Servicing is by unit replacement only.

4.11 Cooling Water Pump

(JFD Order Code: GC271)

Figure 34 Cooling Water Pump

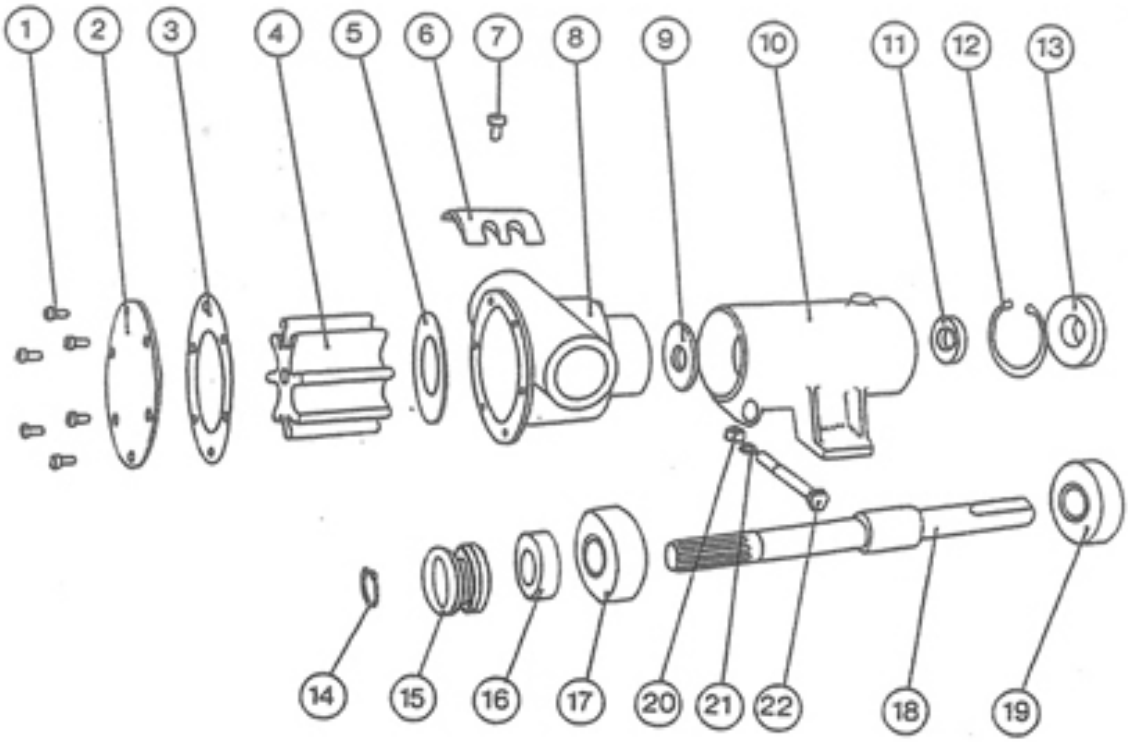

4.11.1 Description

1 The water pump is belt driven from the compressor and comprises a neoprene impeller rotating inside a bronze body. The bearings are sealed and the pump is lubricated by the system fluid. Do not run the pump with the cooling system dry as lack of fluid will damage the impeller.

4.11.2 Dismantling

1 Remove from cooler and drain pump by loosening end cover screws.

2 Remove end cover screws, end cover and gasket. Lever out impeller using two rods with hooked ends.

3 Loosen cam screw and remove cam. Remove wear plate.

4 Remove shaft retaining ring and bolt on underside of bearing housing. Withdraw pump body from bearing housing.

5 Remove seal assembly and slide slinger off shaft.

6 Remove drive end shaft seal and bearing retaining ring. Press out shaft and bearings from impeller end.

7 Press bearings from shaft.

4.11.3 Servicing

1 Thoroughly clean all parts and examine for signs of wear of damage and replace as necessary.

2 A service kit is available and contains replacements for all parts likely to be required for normal overhaul. Service kit Part No.15295/SK229 (JFD Order Code GC164).

4.11.4 Assembly

1 Lubricate inner bearing seal with grease and press into bearing housing with spring facing impeller.

2 Press bearings onto shaft until located in housing.

3 Locate slinger in drain area and press haft into bearing housing. Guide slinger onto shafter until located in housing.

4 Replace bearing retaining ring and shafter seal with spring facing drive end.

5 Fit pump body to bearing housing and secure with bolt.

6 Replace seal seat and cup rubber with seal seat face towards impeller.

7 Fit Primary Seal with carbon face towards face on seal seat. Replace seal retaining ring.

8 Fit wear plate, lining slot with pin in body.

9 Coat top and back of cam and cam screw with non-setting jointing compound and fit in body.

10 Lubricate impeller bore with a light coating of Marfak 2HD grease. Start impeller into bore with a rotary motion until spline engage and then push home.

11 Replace gasket and end cover and secure with end cover screws.

Table 26 Cooling Water Pump Parts List

Description	Qty	Ref.
End Cover Screws*	6	1
End Cover	1	2
Gasket*	1	3
Impeller*	1	4
Wearplate	1	5
Cam	1	6
Cam Screw	1	7
Body	1	8
Slinger	1	9
Bearing Housing	1	10

Description	Qty	Ref.
Seal - Bearing*	1	11
Retaining Ring	1	12
Seal - Bearing	1	13
Shaft Retaining Ring*	1	14
Primary Seal*	1	15
Seal Seat and Cup Rubber*	1	16
Ball Bearing	1	17
Shaft	1	18
Ball Bearing	1	19
Nut	1	20
Washer	1	21
Bolt	1	22

Note ***For spares purposes, service kit Part No.15295/SK229 (JFD Order Code GC164) contains replacements for all parts likely to be required for normal overhaul. Items marked * are included within the service kit.***

4.12 Cooling Water Heat Exchanger Seawater/Freshwater

Part Number: FG.160-3877-5 (JFD Order Code: GE098)

Figure 35 Cooling Water Heat Exchanger Seawater/Freshwater

4.12.1 Description

The heat exchanger consists of a shell, tube stack and end covers sealed by o-ring seal held in place by an end cover, which secures the seal against three faces; the body, the tube plate and the end cover.

Shell - Comprises an aluminium casting, fully machined to accept the tube stack.

Tube Stack - Comprises naval brass tube plates, between which are the tubes. Theses are punch expanded and bonded in place by soldering. The tube material is cupro-nickel. The

freshwater is guided over the tube by a series if baffles arranged along the length of the tube stack. Baffles are of the radial flow type and constructed from aluminium.

End Covers - The end covers are manufactured in gun metal and incorporate the cooling seawater inlet and outlet connections.

O-ring Seals - The material of the O-Ring seals is nitrile.

4.12.2 Installation

1 It is important that air is kept out of the system, particularly on the fresh water side. Aerated water can cause erosion of the tubes. Heat exchange should be piped for counter flow. The cooling water inlet should be on the lower connection and outlet the upper connection. Always circulate at the recommend sea water and fresh water flows. Excessive flow can also cause corrosion and erosion

Table 27 Cooling Water Heat Exchanger Seawater/Freshwater.

Duty Flow	Fresh Water	10 imp galls/min
	Sea Water	16 imp galls/min
	Fresh Water	17 lbf/in^2 1.3 bar
Pressure	Sea Water	30 to 45 lbf/in^2 2 to 3 bar
Heat Exchange Rate		1500 BTU/min
Connection		1 1/4” BSP
Weight		18Kg

4.13 By-Pass Valve Tescom Regulator

(JFD Order Code: GE040)

4.13.1 General Specifications

Dome loaded adjustable spring bias non-venting pressure reducing regulator.

Inlet Pressure	414 bar (6000 psi) maximum	
Bias Pressure	1.0 bar (15 psi) maximum	
Proof Pressure	150% maximum operating pressure	
Burst Pressure	400% maximum operating pressure	
Outlet Pressure	103 bar (1500 psi) maximum	
Operating Pressure	-26°C - 74°C	
Material	Back-up ring	- Teflon
	O-Ring	- Viton
	Seat	- CTFE
	Gasket	- CTFE
	Remaining Parts	- Brass, 303 series stainless steel and 17-4ph

Full Repair Kit Part Number - RK233

Soft Spares Kit Part Number - RK229

Figure 36 By-Pass Valve

WARNING

IT IS ESSENTIAL THAT REGULATORS AND ASSOCIATED FITTINGS, PIPES ETC. ARE KEPT FREE OF HYDROCARBONS SUCH AS GREASE OR OIL DURING ASSEMBLY. THE ONLY LUBRICANTS WHICH MAY BE USED AS MS4, KRYTOX 240AC OR OTHER SUITABLE NON-HYDROCARBON GREASE. FOLLOWING MAINTENANCE, IT IS DESIRABLE TO OXYGEN CLEAN ALL REGULATORS.

4.14 Pressure Control Valve

(JFD Order Code: B10510311)

Figure 37 Pressure Control Valve

IR 400, IR 500 Series

High Flow Pressure Regulator

Operating Conditions

IR 400/IR 500 Inlet: 4000 psig (275 barg)

Outlet: 1-30, 2-100, 5-300, 12-500 psig (.06-2, 7, 21, 34 barg)

Flow Capacity

IR 400/IR 500 C_v = 0.13

Internal Volume

9.30 cc

Temperature

-40°F to 150 ^{o}F (-40°C to 66 ^{o}C)

Brass or 316L Stainless steel construction

Suitable for low flow applications

Single Stage

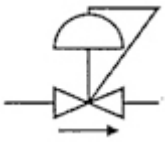

This device is used to reduce a high pressure, supply pressure or inlet pressure in one stage to a low pressure. The low pressure side may also be called: low pressure, reduced pressure, control pressure, delivery pressure, downstream side pressure or outlet pressure. Single stage regulators are generally preferred where there is little inlet pressure variability or where some outlet pressure variability is acceptable (see supply pressure effect specification on our product literature).

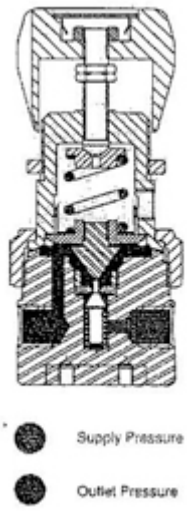

Inlet Pressure:	207 barg	
Outlet Pressure:	7.6 barg	RK271 - Seal Kit
Part No:	B10510311	RK272 - Rebuild Kit

4.15 Solenoid Valves

4.15.1 Unloader Solenoid Valve

(JFD Order Code: B10510312) Normally closed, three way solenoid valve.

Note ***Servicing by unit replacement only.***

Figure 38 Unloader Solenoid Valve

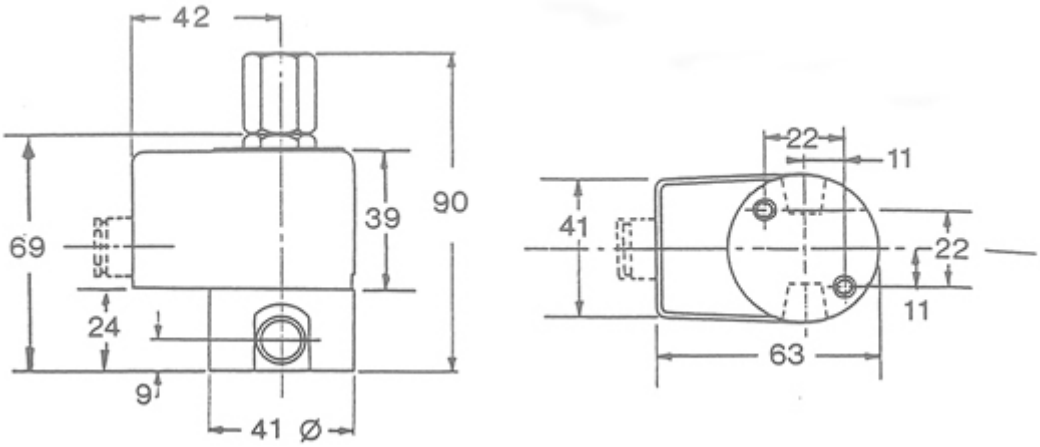

Repair Kit JFD Order Code: GE060

4.15.2 High Pressure Bypass Solenoid Valve

(JFD Order Code: GE087) Normally closed, two way solenoid valve.

Note ***Servicing by unit replacement only.***

Figure 39 High Pressure Bypass Solenoid Valve

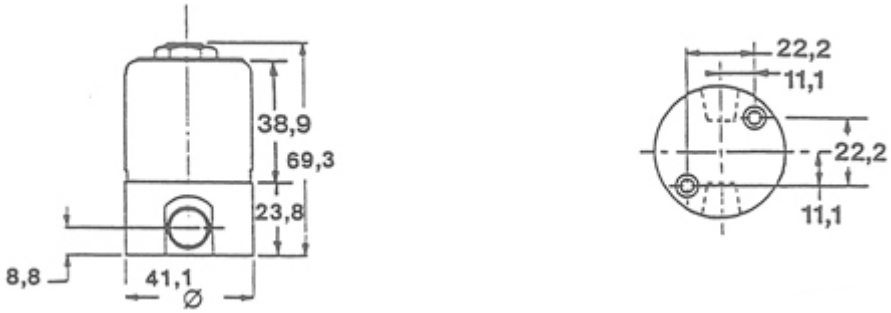

Repair Kit JFD Order Code: DX5526.

4.16 Non-return Valve

(JFD Order Code: VC420)

4.16.1 General Specifications

Mitre valve with o-ring insert.

Maximum Working Pressure	3000 psi
Lift Pressure	10 psi
Connections	1/2” BSPP Female

Materials

Body	Brass
Valve	Brass
‘O’ Ring	Nitrile

Note ***Servicing by unit replacement only.***

Figure 40 Non-Return Valve

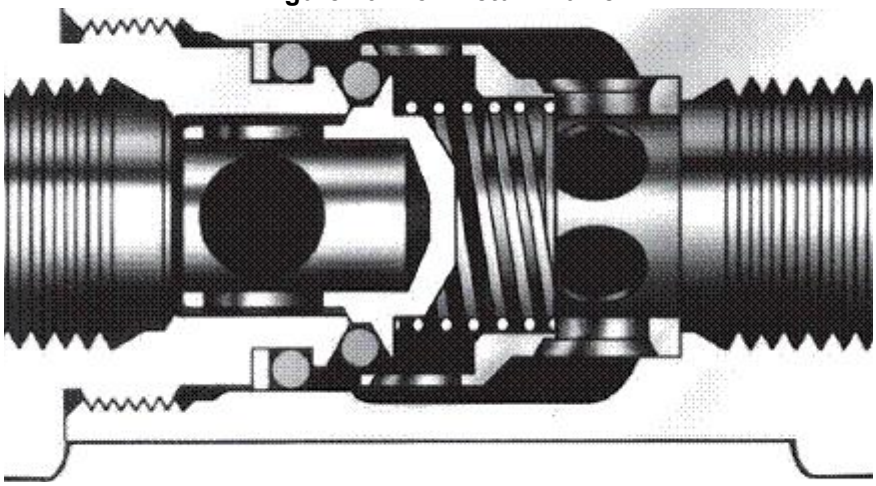

4.17 Pneumatic Inlet Shut-off Valve

Worcester Ball Valve fitted with Norbro Actuator (JFD Order Code: GE113)

Figure 41 Pneumatic Inlet Shut-Off Valve

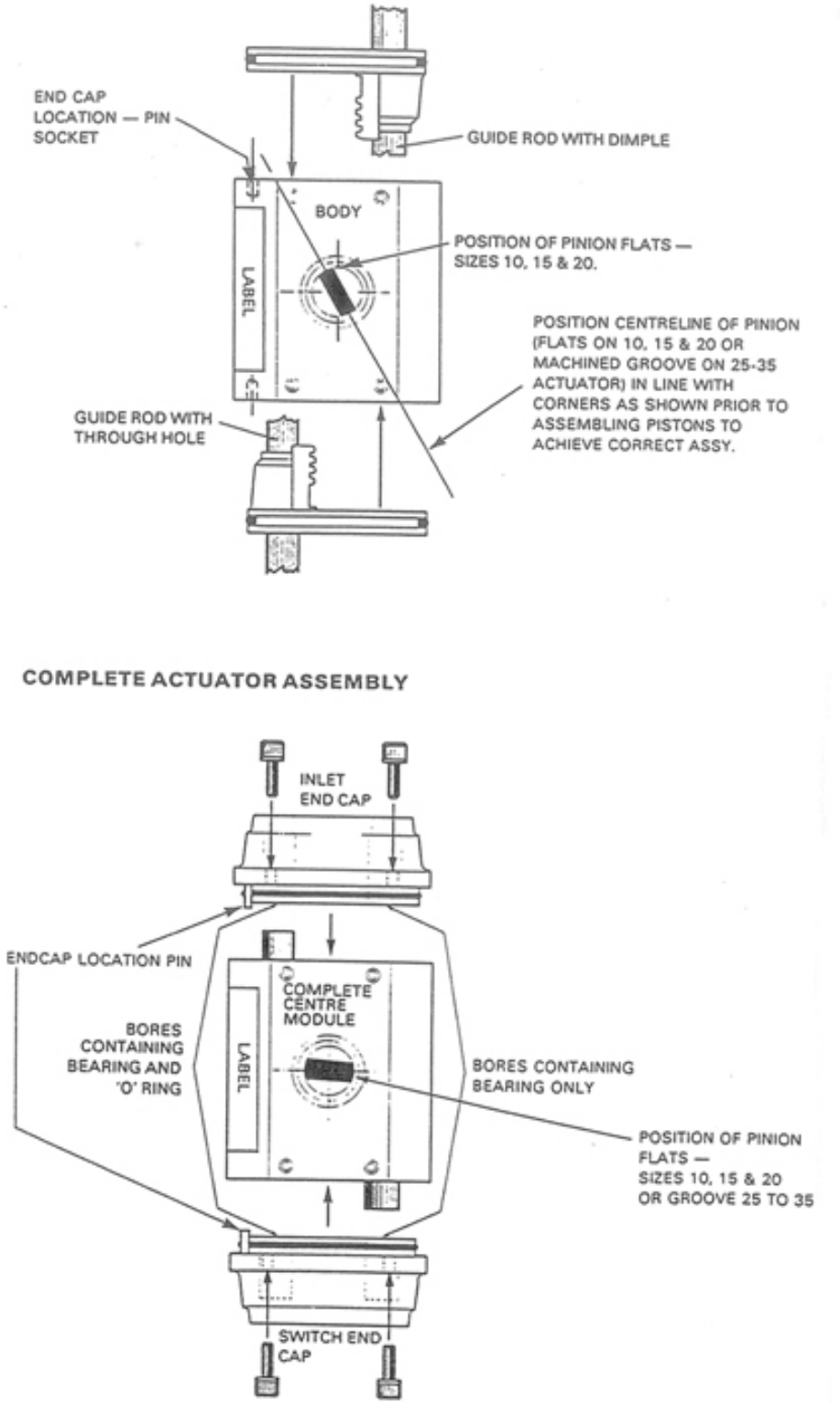

4.17.1 Dismantling

1 Isolate actuator and vent all pressure safety.

2 Disconnect pneumatic connection and remove actuator from ball valve.

3 Remove end cap screws diagonally, evenly and in small stages.

Note ***If this is not done, the springs will tilt the end cap - preventing complete removal of the screws.***

4 In cases where there are less than 5 springs in each end cap, carefully note position of springs in end cap pockets to ensure that the actuator is reassembled correctly.

5 Remove end caps.

6 Rotate pinion (anti-clockwise) until pistons reach their end of travel.

7 Remove pistons from body by pulling protruding support-rods.

8 Remove circlips and thrust washer.

9 Push pinion clear of body, out through the base of the actuator body and remove top bearing.

10 To release support-rods from pistons, remove dog screw set into the side of each piston and withdraw it from the rack side of the piston.

4.17.2 Assembly

Double Acting Actuator

Note ***Where greasing is specified, use ESSO IL 2880 or equivalent.***

1 One pair of piston support-rod assemblies comprises:

- 2 Pistons (identical)
- 1 Support-rod with a through hole
- 1 Support-rod with a dimple
- 2 Dog screws

2 Check that all bearing and o-ring grooves are clean and smooth.

3 Fit one bearing and two small o-rings to each piston. Fit one in long bore, and remaining ‘O’ ring and bearing in other groove.

4 Examine the support-rods for scoring or other damage and replace if necessary.

5 Select support-rod with the through hole and after greasing, slide the end nearest the through hole into the rack side of the piston. This will prevent the feed hole damaging the ‘O’ ring.

6 Align the piston boss dog screw hole and support-rod hole. Coat dog screw with PERMABOND A130 and tighten into guide rod.

Note ***Dog point must align into hole in guide rod.***

7 Repeat (5) and (6) with other piston and the dimpled support-rod.

8 Ensure that the piston and pinion bores in the body are undamaged, and lightly greased.

9 Fit new bearing and o-ring to bottom of pinion, fit thrust washers and thrust bearings to top of pinion.

10 Lightly grease the pinion top and bottom. Insert pinion into the larger bore, and push into position taking care not to damage the o-ring. Place the o-ring and top bearing over the pinion. Position the anti-scuffing washer then snap the circlip into place.

11 Fit the two main piston o-rings and lightly grease.

12 Grease the racks and body bore.

13 Set the pinion flats as shown in the illustration. Slide the piston/support-rod assemblies in through each end of the body so that the rack teeth engage correctly with the pinion. The use of support-rod locating spigots may be found to aid engagement of support rods in mating pistons.

14 Rotate the pinion CLOCKWISE so that the pistons come together. In this position the pinion flats should be approximately square to body.

15 Select one switch end cap and one inlet end cap. Check that all o-rings/grooves are clean and fit the o-rings (if being replaced).

16 The end cap has a cast pin to prevent incorrect assembly. It is important that end caps are replaced the correct way round, or loss of power will result.

17 Heavily grease one end of each spring and locate each spring into spring pockets in actuator end cap. If actuator has less than 5 springs in each end cap reposition springs exactly as they were - before removal.

18 Carefully slide the caps squarely into their relative ends of body assembly.

19 Tighten end cap screws diagonally, evenly and in small stages.

20 To fully locate springs, operate actuator.

4.18 Gas Pressure Switches

4.18.1 Stage One Pressure Switch

(JFD Order Code: B10510313)

Model	GEMS Sensors PS71-40-4MGZ-C-H
Setting	700 psi
Connection	1/4” BSP Male
Protection	IP 65
Temperature Range	-9°C to + 85°C
Power Requirements	110 V 60 HZ

4.18.1.1 Pressure Adjustment

Turn screw clockwise to increase pressure setting and anti-clockwise to decrease setting. Servicing of switch is by unit replacement only.

4.18.2 Stage 2 Pressure Switch

(JFD Order Code: GE100)

Model	GEMS Sensors PS71-50-4MGZ-C-H
Setting	1550 psi
Connection	1/4” BSP Male
Protection	IP 65
Temperature Range	-9°C to + 85°C
Power Requirements	110 V 60 HZ

4.18.2.1 Pressure Adjustment

Turn screw clockwise to increase pressure setting and anti-clockwise to decrease setting. Servicing of switch is by unit replacement only.

4.18.3 Low Inlet Pressure Switch

(JFD Order Code: B10510335)

Model	Suco 0184-45703-1-003
Setting	0.3 Bar
Connection	1/4" BSP Male
Protection	IP65
Temperature Range	-30C to +100C
Power Requirements	110 V 60 HZ

4.18.3.1 Pressure Adjustment

Turn screw clockwise to increase pressure setting and anti-clockwise to decrease setting. Servicing of switch is by unit replacement only.

4.19 High Gas Temperature Switch

(JFD Order Code: GE29933)

Figure 42 High Gas Temperature Switch

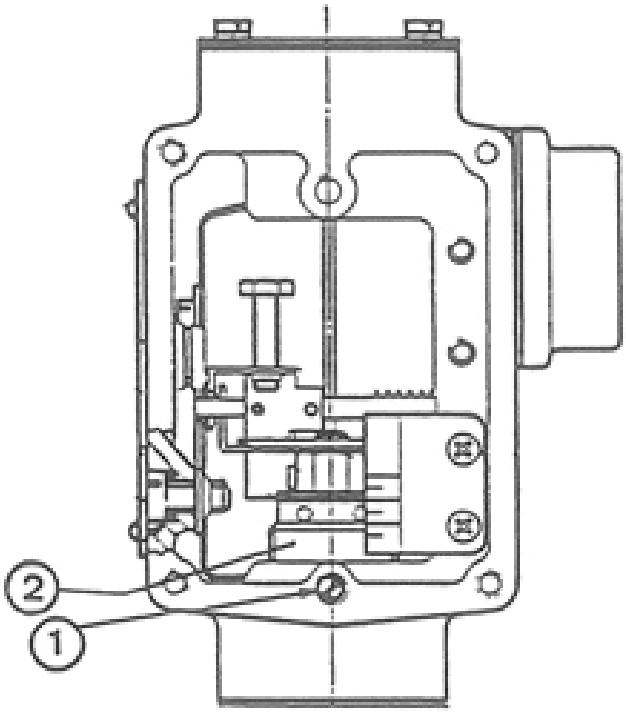

4.19.1 Description

The switch normally leaves the factory present to the customer's requirements, the setting being stamped on the nameplate. Should it be necessary to reset or calibrate an unset switch, the following procedure should be carried out.

Note ***Gas high temperature switch to be set at 200°C rising.***

4.19.2 Temperature Adjustment

1 Check switch set point before attempting to reset.

2 Remove front cover.

3 Slacken screw (1) and adjust the brass barrel (2) using a tommy bar located in the holes in the circumference. The set point can be read from the adjacent scale - the set mark is identified by the black line on the brass adjuster. Turning the barrel to the right will raise the set point and turning to the left will lower the set point.

4 After adjustment, tighten screw (1).

5 Refit front cover.

4.19.3 Maintenance

No maintenance of the switch is required and should the switch become defective, it must be replaced as a complete unit.

4.20 Low Oil Pressure Switch

(JFD Order Code: GE122)

Figure 43 Low Oil Pressure Switch

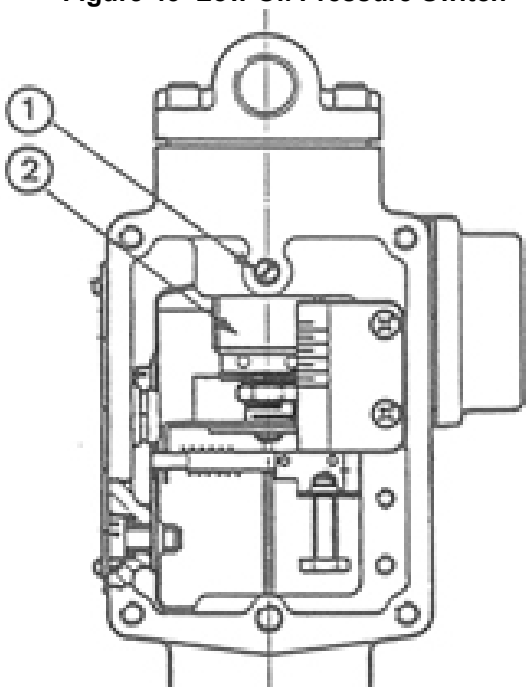

4.20.1 Description

The switch normally leaves the factory present to the customer's requirements, the setting being stamped on the nameplate. Should it be necessary to reset or calibrate an unset switch, the following procedure should be carried out.

Note ***Compressor low oil pressure switch is to be set at 25*** psi ***falling.***

4.20.2 Pressure Adjustment (Single Step Pressure Switch)

1 Check switch set point before attempting to reset.

2 Remove front cover.

3 Slacken screw (1) and adjust the brass barrel (2) using a tommy bar located in the holes in the circumference. The set point can be read from the adjacent scale - the set mark is identified by the black line on the brass adjuster.

Note ***Turning the barrel to the right will raise the set point and turning to the left will lower the set point.***

4 After adjustment, tighten screw (1).

5 Refit front cover.

4.20.3 Maintenance

No maintenance of the switch is required, and should the switch become defective (i.e. switch indicating fault condition of oil pressure failure when gauge shows pressure available), then the switch must be replaced as a complete unit.

4.21 Electric Motor

4.21.1 Fitting Pulleys

Pulleys should be fitted on the shaft with a screwing motion. **ON NO ACCOUNT SHOULD PULLEYS BE DRIVEN ON.**

WARNING

TAPPING OF FITMENTS ON THE MOTOR SHAFT WITH A HAMMER OR MALLET CAUSES BEARING DAMAGE, RESULTING IN AN INCREASE OF BEARING NOISE AND A SIGNIFICANT REDUCTION IN BEARING LIFE. WHERE A GREATER INTERFERENCE FIT IS CONSIDERED, THE OPPOSITE DRIVING END OF THE MOTOR SHAFT MUST BE SUPPORTED WHILE THE SHAFT FITMENT IS TAPPED INTO POSITION. SUPPORT CAN BE OBTAINED BY THE ENGAGEMENT OF A SOLIDLY FIXED CENTRE INTO THE NON-DRIVING SHAFT END.

4.21.2 Wiring Up

The cables used should be capable of carrying the full load current of the motor without overheating or undue voltage drop. Terminal screws should be tight. Wiring should be carried out or checked by a qualified electrician, and equipment must be earthed in accordance with current regulations.

WARNING

ISOLATE POWER SUPPLY TO MOTOR BEFORE COMMENCING ANY ROUTINE CLEANING OR MAINTENANCE WORK.

4.21.3 Routine Cleaning

Remove the fan cover and ensure that all air inlet holes are completely free. Clear any dirt and fluff from behind the fan and along the ribs of the frame.

4.21.4 Bearings

Ball and roller bearings are sent out from the works fully charged with grease sufficient to last for at least two years, provided there is a little or no grease leakage. When replenishing, use any good grease which has a lithium base and avoid overfilling the bearing housings.

4.21.5 Maintenance

1 Remove cover and fan. Fan is keyed, clamped, pinned, knurled, or star tolerance ring located to the shaft extension. Slacken and remove bearing cover screws and end shield bolts/studs. Ease end shields off spigots.

2 Withdraw rotor from stator, ensuring neither is damaged.

3 Remove all dirt using a supply of low pressure dry air. Do not use a high pressure air supply as the high velocity air stream can force dirt into the spaces between windings. Grease removing solvents should only be used very sparingly so as not to damage impregnating varnish or insulation.

4 Bearings are despatched from the works charged with grease sufficient to last for at least two years, provided there is little or no grease leakage. When replenishing, use any good grease which has lithium base and avoid overfilling the bearing housing.

5 Motors should be reassembled in the reverse order from dismantling, taking care not to damage the windings on insertion of rotor. Ease end shields onto bearings and spigots. **DO NOT USE FORCE.**

6 Before starting, check that the rotor rotates freely. Ensure that the electrical connections are correct and terminal nuts tight.

7 Refit pulley, ensuring correct alignment with the driven part. Misalignment will inevitably result in bearing trouble and shaft breakage.

4.21.6 Fault Finding

Fault	Cause	Solution
Motor connected but will not start	1. Supply failure either complete or in one phase	Disconnect at once and check supply to motor terminals
	2. Overload	Reduce load or use a larger motor
Motor will not reach full speed	1. Overload	Reduce load or use a larger motor
	2. Voltage drop in cable	Check voltage and use a larger cable
Overheating on load	1. Mistaken idea of permissible temperature rise	Rough check with thermometer in eyebolt hole
	2. Overloading	Reduce load or use a larger motor
	3. Single phasing	Check supply

Type: Leroy Somer 37kw (50Hp) 400 V 3ph 50/60Hz

Approximate full load current - 68 amps. Weight - 290 Kg

Starting current - 170amps

Figure 44 Electric Motor

5 Model K651 Service Spares Kits

Part No.	JFD Order Code	Description	Qty
Top End Gasket Kit - Part No: SK065101(JFD Order Code: DX4121) Comprising:			
9655/3	GE034	Sealing Ring- Water Jacket 1_{st} & 2nd St.	4
9017/73/75S	GE035	O-Ring - Valve Cover 1st Stage	1
42869	GC007	Tab Lock Washer 1st & 2nd Stage Piston	2
42870	GE027	Gasket - Cylinder Head 1st Stage	1
MR1395-30N	GE032	O-Ring - Distance Plate 1st & 2nd Stage	4
8603/Leotite	DX9182	Gasket - Distance Plate 1st & 2nd Stage	4
9017/14/75S	GE036	O-Ring - Suction Valve Cover	1
9017/62/90S		O-Ring - Delivery Valve Cover	1
MR0845-30V		O-Ring - Cylinder/Cylinder Head	1
8603/Leotite	DX9182	Gasket - Guide Cylinder/Crankcase	2
9017/18/90	GE041	O-Ring - Water Manifold	4
6793/42	GC004	Seal Washer - Cooling Pipe	2
10001/4v	GC151	Seal - 3/4” BSP	7
10001/7v	DX10195	Seal - 1 1/4” BSP	3
10001/1	DX247	Seal - 1/2” BSP	2
10001/9	DX3922	Seal - 1/4” BSP	8
10001/3	GC166	Seal - 3/8” BSP	1

Part No.	JFD Order Code	Description	Qty
Bottom End Gasket Kit - Part No: SK065102 (JFD Order Code: DX4109) Comprising:			
8602	GE023	Gasket - Bearing Housing	2
14025	GE024	Gasket - Oil Pump	1
9637/8	DX1322	Sealing Water - Filler Plug	1
8601N	GE026	Gasket - Side Cover Plate	2
6793/8	GC088	Seal Ring - Oil Suction Filter	1
9017/10/75	GE033	O-Ring - Oil Bypass Valve	1
14016	GE025	Gasket - Bearing Housing Oil Filter	1
8624	GE042	Main Oil Seal	1
4829/8	GC025	Split Pin - Centre Bearing Housing	2
8590	GE015	Tab Washer - Big End Bolt	4
MR0495-30F	GE039	O-Ring - Unloader Valve	2
42715/1	GC065	U Ring - Unloader Valve	2

Part No.	JFD Order Code	Description	Qty
MR0245-30N	GC064	O-Ring - Unloader Valve	2
42711	GE030	Gasket - Unloader Valve	2

Part No.	JFD Order Code	Description	Qty
Auxiliary Gasket Kit - Part No: SK065103 (JFD Order Code: DX4110) Comprising:			
9017/57/90	GE038	O-Ring - Moisture Separator	1
40925	GE028	Gasket - End Plate Inlet	2
40924	GE029	Gasket - End Plate	2

Part No.	JFD Order Code	Description	Qty
Minor Services Kit - Part No: SK065104 (JFD Order Code: GC355) Comprising:			
SK065101	DX4121	Top End Gasket Kit	1
BU6034101	GE011	Valve Assembly - 1st Stage	1
BU6024101	GE012	Valve Assembly - 2nd Stage Suction	1
BU6024101	GE012	Valve Assembly - 2nd Stage Delivery	1
8632	GC026	Breather - Cylinder 1st & 2nd Stage	2
*		Oil Filter	1
* Where an oil filter is fitted, note the following:			
For paper oil filter element, order Part No.13320/3			
For metal canister oil filter, order Part No.Y30048			
Refer to Section 7.5 to determine type of oil filter fitted.			

Part No.	JFD Order Code	Description	Qty
Major Service Kit - Part No: SK065105 (JFD Order Code: GC290) Comprising:			
SK065104	GC355	Minor Service Kit	1
SK065102	DX4109	Bottom End Gasket Kit	1
SK065103	DX4110	Auxiliary Gasket Kit	1
42859	GE003	Piston Ring - 1st Stage	7
42860	GE004	Guide Ring - 1st Stage	1
BU6122102	GE089	Pressure Packing Unit - 1st & 2nd Stage	2
BU6122101	GC301	Wiper Packing Unit - 1st & 2nd Stage	2
42570	GC222	Gudgeon Pin - 1st & 2nd Stage	2
9107/7	GE007	Circlip - 1st & 2nd Stage	4

Part No.	JFD Order Code	Description	Qty
42861	GE005	Piston Ring - 2nd Stage	7
42862	GE006	Guide Ring - 2nd Stage	1
14008	GE019	Oil Pump Assembly	1
8586	GE016	Main Bearing Bush	4
8599		Thrust Washer	2
8582	GE017	Centre Bearing	1pr
10801	GE014	Big End Bearing	2pr
42567	GE002	Needle Roller Bearing - Connecting Rod	2
42713	GE020	Valve Assembly - Unloader	2

Part No.	JFD Order Code	Description	Qty
Remote Location Service Kit - Part No: SK065106 (JFD Order Code: GC471)Comprising:			
42848	GE094	Cylinder Head - 1st Stage	1
U6133101	GC292	Piston Unit - 1st Stage	1
U6033101	GE096	Cylinder Unit - 1st Stage	1
BU6122102	GE089	Pressure Packing Unit - 1st & 2nd Stage	2
BU6122101	GC301	Wiper Packing Unit - 1st & 2nd Stage	2
25004	DX287	Crosshead Guide - 1st & 2nd Stage	2
42849	GE091	Cylinder Head - 2nd Stage	1
U6123101	GC291	Piston Unit - 2nd Stage	1
U6023101	GE097	Cylinder Unit - 2nd Stage	1
8562	GC085	Crankshaft	1
G12586/2	GC10526	Unloader Valve Assembly	2
41097/3	GC131	Water Relief Valve	1

Intentionally blank

Chapter 7 - Volume Tank

1 General Description

The volume tank consists of ten 50 ltr. bottles mounted in a frame. The purpose of the Volume Tank is to provide a buffer between the booster package and the diver supply. A schematic drawing of the piping of the volume tank is included, see "Tank, Volume, Gasmizer, Interface Information IFD1001007S1" in Appendix A page 10.

The function of the volume tank is to store gas for the system, allow some mixing to be done and permit draining of moisture. It is also the point in the system where automatic make-up of gas takes place.

The main components are as follows:

1 Ten 50 Ltr cylinders, of water volume 500 litres (17.6) cubic feet and working pressure 103 bar (1500 psi).(1)

2 Tube arrangement in each cylinder to enhance mixing within the tank (24).

3 Fittings and reducers on the gas supply.

4 Ball valve to isolate volume tank from booster package and inter-connecting pipework.(9)

5 Pipe fittings.

6 2 Shut off valves, to allow water dumping (19).

7 Relief valve to protect vessel from over-pressure (17).

8 Check valve to prevent reverse flow from the volume tank in normal operation.

2 Maintenance Schedule

150 hrs	Next due_____hrs.
Drain volume tank by cracking water dump valve 19.	

Intentionally blank

Chapter 8 - System Installation and Operation

Contents

Title **page**

1 Introduction 8.2
2 System Start- Up & Operating Procedure 8.3
2.1 Start up Procedure 8.3
3 Gasmizer Bell Card 8.5
3.1 One Diver 8.5
3.2 To Drain Watertrap 8.5
3.3 Post-dive Check Off 8.5
4 Gasmizer Bell Card - One or Two Divers 8.7
4.1 One or Two Divers 8.7
4.2 To Drain Watertrap 8.7
4.3 Post-dive Check 8.7
4.4 Shutdown Procedure 8.8
4.5 To Change Soda Lime 8.9
4.6 Changing Depth 8.9
4.7 Air or Electric Gasmizer Response Times 8.10
5 Regulator Setting Guidelines – 1 Diver 8.14
6 Regulator Setting Guidelines – 2 Divers 8.16
7 System Operation at Extreme Depths 8.18
7.1 Deep Diving Procedure – Depth Greater than 200 msw (650 fsw) 8.18
7.2 Shallow Diving Procedure – Depth less than 30 msw (100 fsw) 8.18
8 Fault Finding 8.19
8.1 Fault Finding Gazmizer System 8.19
8.2 Fault Finding Gasmizer Bell Equipment 8.20

1 Introduction

The purpose of this section of the manual is to describe in detail the procedures necessary to install a new Gasmizer system and to describe the detailed set-up and operating procedure.

2 System Start- Up & Operating Procedure

Prior to start up ensure that the appropriate gases are on-line.

1 Make-up gas is supplied to the Gasmizer control panel. In the event that the reprocessing unit/gas booster operation is interrupted, this will automatically become diver gas supply. The make-up gas must therefore be a suitable bottom mix for the diving depth.

2 Similarly, two back up gas supplies are required which should be a suitable bottom mix.

3 Pure oxygen is required for oxygen make-up.

WARNING

PURE HELIUM SHOULD NOT BE CONNECTED TO THE SYSTEM UNDER ANY CIRCUMSTANCES.

2.1 Start up Procedure

1 Change Soda lime canisters as described in section 4.5 (page 9) and note time of canister change on Control Console panel.

2 Ensure that all shut off valves in the system are open and one Soda lime canister is on line.

3 Check booster oil level and top up with recommended lubricant if necessary.

4 Check water level in booster header tank, top up with glycol water mix if necessary.

5 Turn on seawater cooling supply booster.

6 Turn on cooling supply to Reprocessing Unit.

7 Set Control Console BPR loader, O_2 regulator and make-up regulator for the proposed diving depth according to section 5 (page 14).

8 Crack the exhaust cross-connect valve and allow the exhaust umbilical pressure to rise to the correct value for the proposed dive, then close valve. This is the BPR loader pressure specified in section 5 (page 14).

9 Ensuring that both stop/lock buttons are pulled out and switch on main isolator on booster starter panel. Fault lights will illuminate.

10 Press reset button on booster starter panel. Fault lights will go out.

11 Select local or remote operation.

12 Start booster from the indicated station.

13 Check booster oil pressure. If gauge does not reach 50 psi (3.4 bar) within 30 seconds, stop machine and investigate cause. With excessively low oil pressure the booster will stop automatically due to pressure switches in the control circuit.

14 Check gas quality by allowing gas to flow from the Reprocessing Unit sample regulator through the O_2 and CO_2 analysers in dive control.

15 The unit is now ready to supply reclaimed gas to the diver.

16 The gas booster will circulate gas around itself until such time as a diver starts breathing on recovery at which time the booster will automatically adjust to meet the diver's breathing requirements.

17 Initiate pre dive check off Bell Equipment and diver equipment (see bell check off lists in the following pages).

3 Gasmizer Bell Card

3.1 One Diver

1 Ensure that diver has gas supply to helmet.

2 Check that the SAECO valve (4) is fully open - see indicator on top.

3 Close bell scrubber valve (3).

4 Close drain valve (7).

5 Close diver exhaust manifold valve (5).

6 Push in water trap isolation valve (6).

7 Open diver exhaust hull valve (8) slowly.

8 Turn the BPR loader (1) anti c lock wise until it stops rotating.

9 Adjust the BPR bleed valve (9) to read 0.5 ltr/min on the BPR bleed flow meter (12). Once set do not re-adjust.

10 Adjust the BPR loader (1) until the negative pressure gauge (2) reads according to section 5 (page 14) as instructed by the supervisor.

11 Adjust the pneumo supply valve (10) until the pneumo meter (11) reads 0.3 ltr/min.

12 Connect exhaust hose to jewel helmet.

13 Open diver exhaust manifold valve (5).

14 Don helmet and breathe on recovery.

3.2 To Drain Watertrap

1 Pull out isolation valve (6).

2 Open drain valve (7).

3 Close drain valve (7).

4 Push in isolation valve (6).

3.3 Post-dive Check Off

1 Close diver exhaust manifold valve (5).

2 Close Diver exhaust hull valve (8).

3 Open drain valve (7).

4 Open bell scrubber valve (3).

Figure 1 Gasmizer Bell Equipment - One Diver

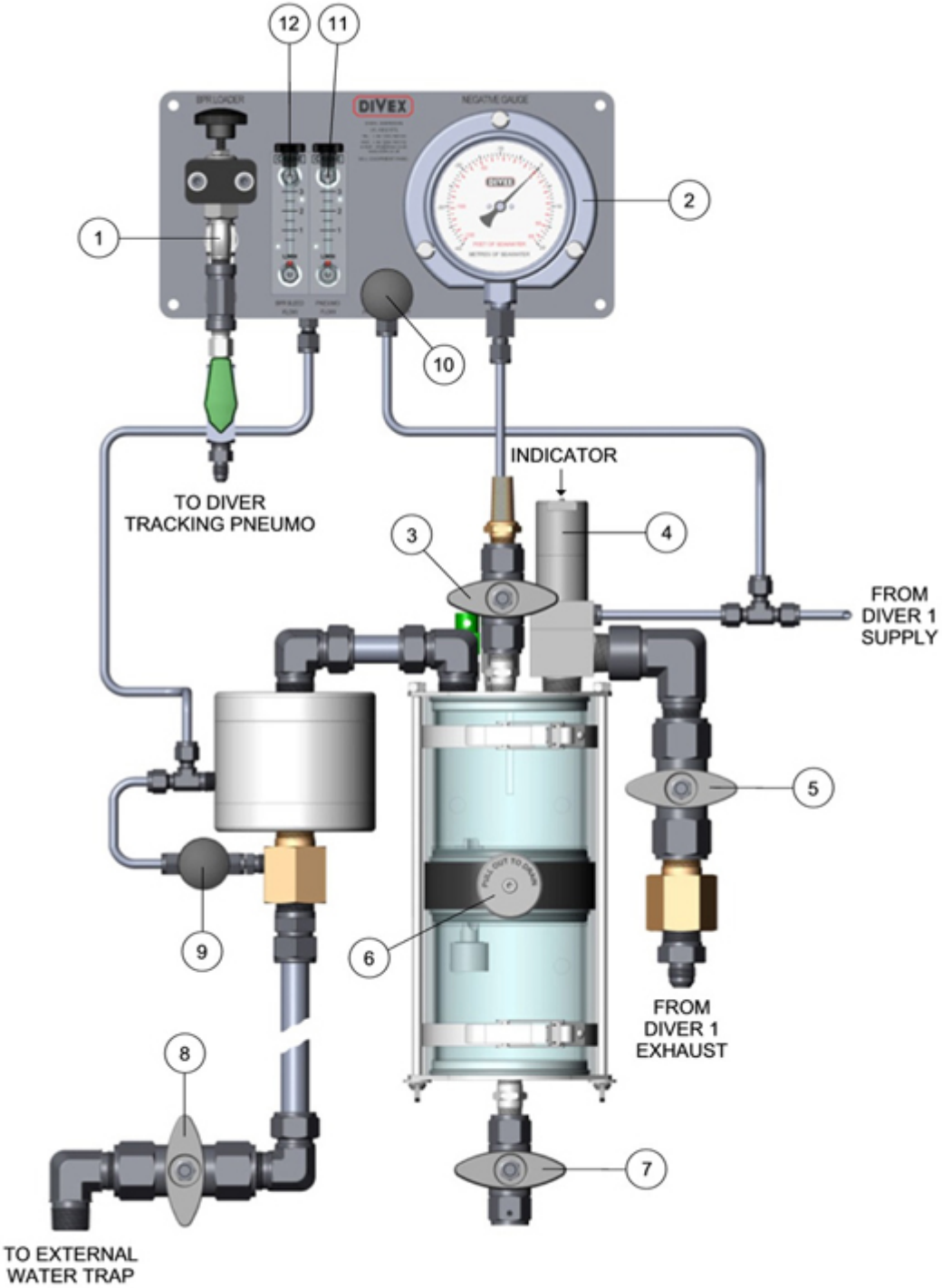

4 Gasmizer Bell Card - One or Two Divers

4.1 One or Two Divers

Note ***For one diver lockout, close tracking pneumo valve not in use (13) or (14). If both tracking pneumo valves are closed the bell equivalent loading sets suction to zero. There will be no suction to the diver unless one valve is open.***

1 Ensure that divers have gas supply to helmets.

2 Check that the Saeco valves (4) and (4A) are fully open - see indicators on top.

3 Close bell scrubber valve (3).

4 Close drain valve (7).

5 Close diver exhaust manifold valves (5) and (5A).

6 Push in water trap isolation valve (6).

7 Open (slowly) diver exhaust hull valve (8).

8 Turn the BPR loader (1) anti clockwise until it stops rotating.

9 Adjust the BPR bleed valve (9) to read 0.5 ltr/min on the BPR bleed flow meter (12). Once set do not re-adjust.

10 Adjust the BPR loader (1) until the negative pressure gauge (2) reads according to table column 8 as instructed by the supervisor.

11 Adjust the pneumo supply valve (10) until the pneumo meter (11) reads 0.3 ltr/min.

12 Connect exhaust hoses to jewel helmet.

13 Open diver exhaust manifold valves (5) and (5A).

14 Don helmets and breath on recovery.

4.2 To Drain Watertrap

1 Pull out isolation valve (6).

2 Open drain valve (7).

3 Close drain valve (7).

4 Push in isolation valve (6).

4.3 Post-dive Check

1 Close diver exhaust manifold valves (5) and (5A).

2 Close diver exhaust hull valve (8).

3 Open drain valve (7).

4 Open bell scrubber valve (3).

Figure 2 Gasmizer Bell Equipment One or Two Divers

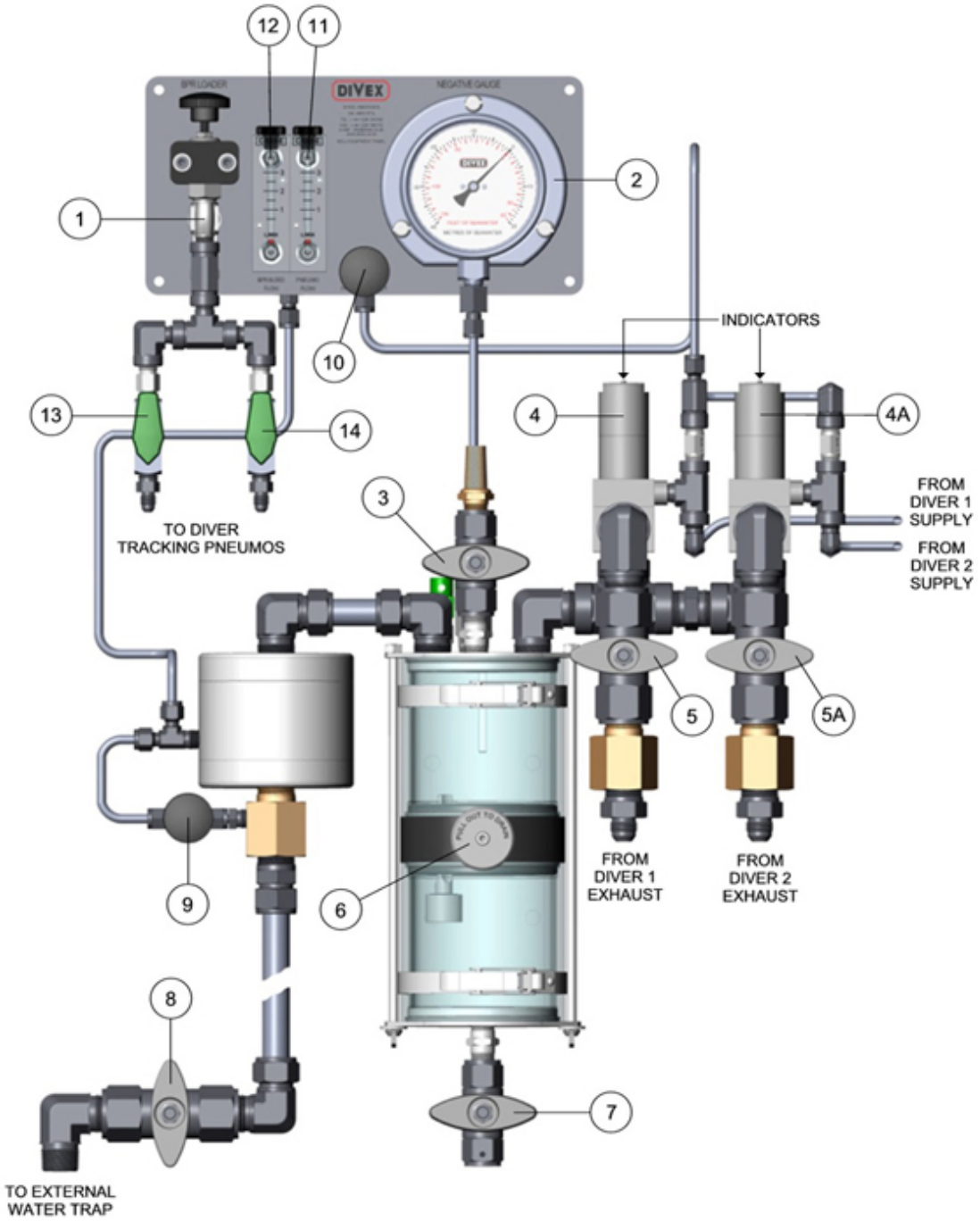

4.4 Shutdown Procedure

1 Recover diver to bell and carry out post dive check off list.

2 Switch off gas booster.

3 Shut off O_2 and HeO_2 make up gas on control console.

4 Turn off control console power.

5 Shut off cooling water supplies to Booster and Reprocessing Unit.

4.5 To Change Soda Lime

1 Close inlet to canister.

2 Close outlet from canister.

3 Open drain valve at base.

4 Once canister is fully vented, unscrew top cap by hand.

5 Place cap in box provided.

6 Using handle, remove canister.

7 Remove handle and top gauze and empty contents.

8 Set empty canister in filling stand.

9 Fill half full with soda lime.

10 Add only one cupful of Purafil at 2/3 full.

11 Fill to two thirds full with soda lime.

12 Add one cupful of Purafil.

13 Fill to top with Soda lime.

14 Replace handle and top lid.

15 With care (slowly) lower inner canister into outer canister.

16 Replace top cap. It is O-ring sealed and seals when finger tight.

17 Close drain valve at base.

18 Slowly open INLET valve on the left.

19 Slowly open OUTLET valve on the right.

20 Record hour meter reading of canister change on the control console in diver control.

4.6 Changing Depth

The make-up panel is provided to allow the oxygen content of the breathing gas to be altered rapidly to a new diving depth. To increase the oxygen content in the system, the following procedure should be followed.

WARNING

OXYGEN ENRICHMENT SHOULD NEVER BE CARRIED OUT WHILE DIVING IS IN PROGRESS.

1 Ensure GAS BOOSTER IS RUNNING.

2 Set the O_2 regulator on the oxygen panel to 40 bar.

3 Shut the vent valve.

4 Open the supply-cross connect valve on the control panel. The gas booster will now circulate gas from the volume tank to the reprocessing unit inlet.

5 Measure the time required to increase the oxygen content to the desired level from section 4.7 (page 10).

6 Open the O_2 supply valve on the make-up panel and note the time.

7 Shut the O_2 supply valve when the appropriate amount of time has elapsed or when the O_2 analyser indicates that the desired mix has been obtained.

8 Open the vent valve.

9 Allow the system to continue to cycle through the supply-exhaust cross connect valve for several minutes, while monitoring the O_2 analyser ensuring a steady reading and complete mixing of the gas.

Helium dilution may be achieved by venting the system, partially or completely and re-pressurising with gas of the appropriate mixture.

4.7 Air or Electric Gasmizer Response Times

Note ***For use with an Air or Electric Driven Gasmizer System. Using 3/4" supply & exhaust umbilicals length-350metres.***

	Partial Pressure OXYGEN						**Breathing Time**		**Oxygen Enriching Time**				
	Time to drop from $0.7PPO_2$ to $0.2PPO_2$ with NO OXYGEN INJECTION (One Diver)						Time to breathe the same molecule of gas @ 40 lpm.		Time required to enrich oxygen content with a 40 bar oxygen supply pressure through both the O_2 injection systems				
Depth	**$0.7PPO_2$**		**$0.2PPO_2$**		**Time**		**System Total**	**Time**	**0.25%**	**0.50%**	**0.75%**	**1.0%**	**1.25%**
msw	$\%O_2$	Litres	$\%O_2$	Litres	Min.	Hr:Min.	Litres	Min.	Min.	Min.	Min.	Min.	Min.
30	17.5	1700	5.0	485	1013	16:53	9700	60	3	7	10	13	16
40	14.0	1510	4.0	432	898	14:58	1,0800	54	4	7	11	15	18
50	11.7	1400	3.3	400	833	13:53	12,000	50	4	8	12	16	20
60	10.0	1320	2.9	377	786	13:06	13,200	47	4	9	13	18	22
70	8.8	1260	2.5	360	750	12:30	14,400	44	5	10	15	19	24
80	7.8	1210	2.2	344	722	12:02	15,500	43	5	10	16	21	26
90	7.0	1170	2.0	334	697	11:37	16,700	41	6	11	17	22	28
100	6.4	1140	1.8	325	679	11:19	17,900	40	6	12	18	24	30
110	5.8	1117	1.7	318	660	11:00	19,100	39	6	13	19	26	32
120	5.4	1090	1.5	311	649	10:49	20,200	38	7	14	20	27	34
130	5.0	1070	1.4	306	637	10:37	21,400	38	7	14	22	29	36
140	4.7	1050	1.3	300	625	10:25	22,500	37	8	15	23	30	38
150	4.4	1040	1.3	296	620	10:20	23,700	37	8	16	24	32	40
160	4.1	1030	1.2	293	614	10:14	24,900	36	8	17	25	33	42

	Partial Pressure OXYGEN						Breathing Time		Oxygen Enriching Time				
	Time to drop from 0.7PPO$_2$ to 0.2PPO$_2$ with NO OXYGEN INJECTION (One Diver)						Time to breathe the same molecule of gas @ 40 lpm.		Time required to enrich oxygen content with a 40 bar oxygen supply pressure through both the O$_2$ injection systems				
Depth	**0.7PPO$_2$**		**0.2PPO$_2$**		**Time**		**System Total**	**Time**	**0.25%**	**0.50%**	**0.75%**	**1.0%**	**1.25%**
170	3.9	1020	1.1	290	608	10:08	26,100	36	9	18	26	35	44
180	3.7	1000	1.1	286	595	9:55	27,200	35	9	18	27	37	46
190	3.5	990	1.0	284	588	9:48	28,400	35	10	19	29	38	48
200	3.3	986	0.95	282	586	9:46	29,600	35	10	20	30	40	50
210	3.2	979	0.91	280	583	9:43	30,800	34	10	21	31	41	52
220	3.0	970	0.87	277	578	9:38	31,900	34	11	21	32	43	54
230	2.9	967	0.83	276	576	9:36	33,100	34	11	22	33	44	56
240	2.8	958	0.80	274	570	9:30	34,200	34	11	23	34	46	58
250	2.7	955	0.77	273	568	9:28	35,500	34	12	24	36	48	60
260	2.6	948	0.74	271	564	9:24	36,600	33	12	25	37	49	61
270	2.5	945	0.71	270	563	9:23	37,800	33	13	25	38	51	63
280	2.4	938	0.69	268	558	9:18	38,900	33	13	26	39	52	65
290	2.3	934	0.67	267	556	9:16	40,100	33	14	27	41	55	69
300	2.2	933	0.65	266	556	9:16	41,300	33	14	29	43	58	72
310	2.2	931	0.63	265	555	9:15	42,500	33	15	30	45	60	75
320	2.1	924	0.61	264	550	9:10	43,600	33	16	31	47	63	79
330	2.1	923	0.59	263	549	9:09	44,800	32	16	33	49	66	82
340	2.0	918	0.57	262	547	9:07	45,900	32	17	35	52	69	86
350	1.9	916	0.56	262	545	9:05	47,200	32	18	36	55	73	91

4.7.1 Electric Gasmizer Response Times

Note ***For use with an Electric Gasmizer System (Based on results obtained at NUTEC, March 85) Using 3/4" supply & exhaust umbilicals length - 500 metres.***

	Partial Pressure OXYGEN						Breathing Time		Oxygen Enriching Time				
	Time to drop from 0.7PPO$_2$ to 0.2PPO$_2$ with NO OXYGEN INJECTION (One Diver)						Time to breathe the same molecule of gas @ 40 lpm.		Time required to enrich oxygen content with a 40 bar oxygen supply pressure through both the O$_2$ injection systems				
Depth	**0.7PPO$_2$**		**0.2PPO$_2$**		**Time**		**System Total**	**Time**	**0.25%**	**0.50%**	**0.75%**	**1.0%**	**1.25%**
msw	%O$_2$	Litres	%O$_2$	Litres	Min.	Hr:Min.	Litres	Min.	Min.	Min.	Min.	Min.	Min.
20	23.3	2875.3	6.7	821.5	1711.5	28.5	12322.6	102.7	3.6	7.3	10.9	14.5	18.2
25	20.0	2555.7	5.7	730.2	1521.3	25.4	12778.7	91.3	3.9	7.9	11.8	15.7	19.7
30	17.5	2316.1	5.0	661.7	1378.6	23.0	13234.8	82.7	4.2	8.4	12.6	16.8	21.0
35	15.6	2129.7	4.4	608.5	1267.7	21.1	13691.0	76.1	4.4	8.9	13.3	17.8	22.2
40	14.0	1980.6	4.0	565.9	1178.9	19.6	14147.1	70.7	4.7	9.4	14.0	18.7	23.4
45	12.7	1858.6	3.6	531.0	1106.3	18.4	14603.3	66.4	4.9	9.8	14.7	19.6	24.5
50	11.7	1756.9	3.3	502.0	1045.8	17.4	15059.4	62.7	5.1	10.2	15.3	20.5	25.6
55	10.8	1670.9	3.1	477.4	994.6	16.6	15515.5	59.7	5.3	10.6	16.0	21.3	26.6
60	10.0	1597.2	2.9	456.3	950.7	15.8	15971.7	57.0	5.5	11.1	16.6	22.1	27.6
65	9.3	1534.2	2.7	438.3	913.2	15.2	16437.7	54.8	5.7	11.5	17.2	22.9	28.7
70	8.7	1484.0	2.5	424.0	883.4	14.7	16960.3	53.0	6.0	11.9	17.9	23.8	29.8

	Partial Pressure OXYGEN						Breathing Time		Oxygen Enriching Time				
	Time to drop from 0.7PPO$_2$ to 0.2PPO$_2$ with NO OXYGEN INJECTION (One Diver)						Time to breathe the same molecule of gas @ 40 lpm.		Time required to enrich oxygen content with a 40 bar oxygen supply pressure through both the O$_2$ injection systems				
Depth	**0.7PPO$_2$**		**0.2PPO$_2$**		**Time**		**System Total**	**Time**	**0.25%**	**0.50%**	**0.75%**	**1.0%**	**1.25%**
75	8.2	1439.8	2.4	411.4	857.0	14.3	17483.0	51.4	6.2	12.3	18.5	24.7	30.9
80	7.8	1400.4	2.2	400.1	833.6	13.9	18005.7	50.0	6.4	12.8	19.2	25.5	31.9
85	7.4	1365.2	2.1	390.1	812.6	13.5	18528.3	48.8	6.6	13.2	19.8	26.4	33.0
90	7.0	1333.6	2.0	381.0	793.8	13.2	19051.0	47.6	6.8	13.6	20.4	27.3	34.1
95	6.7	1304.9	1.9	372.8	776.7	12.9	19573.6	46.6	7.0	14.1	21.1	28.1	35.1
100	6.4	1278.9	1.8	365.4	761.2	12.7	20096.3	45.7	7.2	14.5	21.7	28.9	36.2
105	6.1	1255.1	1.7	358.6	747.1	12.5	20619.0	44.8	7.4	14.9	22.3	29.8	37.2
110	5.8	1233.3	1.7	352.4	734.1	12.2	21141.6	44.0	7.7	15.3	23.0	30.6	38.3
115	5.6	1213.2	1.6	346.6	722.1	12.0	21664.3	43.3	7.9	15.7	23.6	31.5	39.3
120	5.4	1194.7	1.5	341.3	711.1	11.9	22187.0	42.7	8.1	16.1	24.2	32.3	40.4
125	5.2	1177.5	1.5	336.4	700.9	11.7	22709.8	42.1	8.3	16.6	24.8	33.1	41.4
130	5.0	1161.6	1.4	331.9	691.4	11.5	23232.3	41.5	8.5	17.0	25.5	34.0	42.4
135	4.8	1146.8	1.4	327.7	682.6	11.4	23755.0	41.0	8.7	17.4	26.1	34.8	43.5
140	4.7	1133.0	1.3	323.7	674.4	11.2	24277.6	40.5	8.9	17.8	26.7	35.6	44.5
145	4.5	1120.0	1.3	320.0	666.7	11.1	24800.3	40.0	9.1	18.2	27.3	36.4	45.5
150	4.4	1107.9	1.2	316.5	659.5	11.0	25323.0	39.6	9.3	18.6	27.9	37.3	46.6
155	4.2	1096.5	1.2	313.3	652.7	10.9	25845.6	39.2	9.5	19.0	28.6	38.1	47.6
160	4.1	1085.8	1.2	310.2	646.3	10.8	26368.3	38.8	9.7	19.4	29.2	38.9	48.6
165	4.0	1075.6	1.1	307.3	640.3	10.7	26891.0	38.4	9.9	19.9	29.8	39.7	49.6
170	3.9	1066.1	1.1	304.6	634.6	10.6	27413.6	38.1	10.1	20.3	30.4	40.5	50.7
175	3.8	1057.0	1.1	302.0	629.2	10.5	27936.3	37.8	10.3	20.7	31.0	41.4	51.7
180	3.7	1048.5	1.1	299.6	624.1	10.4	28459.0	37.4	10.5	21.1	31.6	42.2	52.7
185	3.6	1040.4	1.0	297.2	619.3	10.3	28981.6	37.2	10.7	21.5	32.2	43.0	53.7
190	3.5	1032.7	1.0	295.0	614.7	10.2	29504.3	36.9	11.0	21.9	32.9	43.8	54.8
195	3.4	1025.3	1.0	292.9	610.3	10.2	30027.0	36.6	11.2	22.3	33.5	44.6	55.8
200	3.3	1018.3	1.0	290.9	606.1	10.1	30549.6	36.4	11.4	22.7	34.1	45.4	56.8
205	3.3	1002.5	0.9	286.4	596.7	9.9	30792.2	35.8	11.5	22.9	34.4	45.8	57.3
210	3.2	998.0	0.9	285.1	594.0	9.9	31364.7	35.6	11.7	23.4	35.0	46.7	58.4
215	3.1	993.6	0.9	283.9	591.4	9.9	31937.2	35.5	11.9	23.8	35.7	47.6	59.5
220	3.0	989.4	0.9	282.7	588.9	9.8	32509.6	35.3	12.1	24.2	36.4	48.5	60.6
225	3.0	985.4	0.9	281.5	586.6	9.8	33082.1	35.2	12.3	24.7	37.0	49.4	61.7
230	2.9	981.6	0.8	280.5	584.3	9.7	33654.6	35.1	12.6	25.1	37.7	50.3	62.8
235	2.9	997.9	0.8	279.4	582.1	9.7	34227.0	34.9	12.8	25.6	38.4	51.2	63.9
240	2.8	974.4	0.8	278.4	580.0	9.7	34799.5	34.8	13.0	26.0	39.0	52.0	65.0
245	2.7	971.0	0.8	277.4	578.0	9.6	35372.0	34.7	13.2	26.5	39.7	52.9	66.2
250	2.7	967.7	0.8	276.5	576.0	9.6	35944.5	34.6	13.5	26.9	40.4	53.8	67.3
255	2.6	964.6	0.8	275.6	574.2	9.6	36516.9	34.4	13.7	27.3	41.0	54.7	68.4
260	2.6	961.6	0.7	274.7	572.4	9.5	37089.4	34.3	13.9	27.8	41.7	55.6	69.5
265	2.5	958.7	0.7	273.9	570.6	9.5	37661.9	34.2	14.1	28.2	42.3	56.5	70.6
270	2.5	955.9	0.7	273.1	569.0	9.5	38234.4	34.1	14.3	28.7	43.0	57.4	71.7
275	2.5	953.2	0.7	272.3	567.4	9.5	38806.8	34.0	14.6	29.1	43.7	58.2	72.8
280	2.4	950.5	0.7	271.6	565.8	9.4	39379.3	33.9	14.8	29.6	44.3	59.1	73.9
285	2.4	948.0	0.7	270.9	564.3	9.4	39951.8	33.9	15.0	30.0	45.0	60.0	75.0

	Partial Pressure OXYGEN						Breathing Time		Oxygen Enriching Time				
	Time to drop from $0.7PPO_2$ to $0.2PPO_2$ with NO OXYGEN INJECTION (One Diver)						Time to breathe the same molecule of gas @ 40 lpm.		Time required to enrich oxygen content with a 40 bar oxygen supply pressure through both the O_2 injection systems				
Depth	**$0.7PPO_2$**		**$0.2PPO_2$**		**Time**		**System Total**	**Time**	**0.25%**	**0.50%**	**0.75%**	**1.0%**	**1.25%**
290	2.3	945.6	0.7	270.2	562.8	9.4	40524.3	33.8	15.2	30.4	45.7	60.9	76.1
295	2.3	943.2	0.7	269.5	561.4	9.4	41096.7	33.7	15.4	30.9	46.3	61.8	77.2
300	2.3	940.9	0.6	268.8	560.1	9.3	41669.2	33.6	15.7	31.3	47.0	62.7	78.3
305	2.2	938.7	0.6	268.2	558.8	9.3	42241.7	33.5	15.9	31.8	47.7	63.5	79.4
310	2.2	936.6	0.6	267.6	557.5	9.3	42814.2	33.4	16.1	32.3	48.3	64.4	80.5
315	2.2	934.5	0.6	267.0	556.2	9.3	43386.8	33.4	16.3	32.7	49.0	65.3	81.6
320	2.1	932.5	0.6	266.4	555.0	9.3	43959.1	33.3	16.5	33.1	49.6	66.2	82.7
325	2.1	930.5	0.6	265.9	553.9	9.2	44531.6	33.2	16.8	33.5	50.3	67.1	83.8
330	2.1	928.6	0.6	265.3	552.7	9.2	45104.1	33.2	17.0	34.0	51.0	68.0	85.0
335	2.0	926.8	0.6	264.8	551.6	9.2	45678.5	33.1	17.2	34.4	51.6	68.8	86.1
340	2.0	925.0	0.6	264.3	550.6	9.2	46249.0	33.0	17.4	34.9	52.3	69.7	87.2
345	2.0	923.2	0.6	263.8	549.5	9.2	46821.5	33.0	17.7	35.3	53.0	70.6	88.3
350	1.9	921.5	0.6	263.3	548.5	9.1	47394.0	32.9	17.9	35.7	53.6	71.5	89.4
355	1.9	919.9	0.5	262.8	547.6	9.1	47966.4	32.9	18.1	36.2	54.3	72.4	90.5
360	1.9	918.3	0.5	262.4	546.6	9.1	48538.9	32.8	18.3	36.6	54.9	73.3	91.6
365	1.9	916.7	0.5	261.9	545.7	9.1	49111.4	32.7	18.5	37.1	55.6	74.1	92.7
370	1.8	915.2	0.5	261.5	544.8	9.1	49683.9	32.7	18.8	37.5	56.3	75.0	93.8
375	1.8	913.8	0.5	261.1	543.9	9.1	50256.3	32.6	19.0	38.0	56.9	75.9	94.9
380	1.8	912.3	0.5	260.7	543.0	9.1	50828.8	32.6	19.2	38.4	57.6	76.8	96.0
385	1.8	910.9	0.5	260.3	542.2	9.0	51401.3	32.5	19.4	38.8	58.3	77.7	97.1
390	1.7	909.5	0.5	259.9	541.4	9.0	51973.8	32.5	19.6	39.3	58.9	78.6	98.2
395	1.7	908.2	0.5	259.5	540.6	9.0	52546.2	32.4	19.9	39.7	59.6	79.4	99.3
400	1.7	906.9	0.5	259.1	539.8	9.0	53118.7	32.4	20.1	40.2	60.2	80.3	100.4
405	1.7	905.6	0.5	258.8	539.1	9.0	53691.2	32.3	20.3	40.6	60.9	81.2	101.5
410	1.7	904.4	0.5	258.4	538.3	9.0	54263.7	32.3	20.5	41.0	61.6	82.1	102.6
415	1.6	903.2	0.5	258.1	537.6	9.0	54836.1	32.3	20.7	41.5	62.2	83.0	103.7
420	1.6	902.0	0.5	257.7	536.9	8.9	55408.6	32.2	21.0	41.9	62.9	83.9	104.8
425	1.6	900.8	0.5	257.4	536.2	8.9	55981.1	32.2	21.2	42.4	63.6	84.7	105.9
430	1.6	899.7	0.5	257.1	535.5	8.9	56553.6	32.1	21.4	42.8	64.2	85.6	107.0
435	1.6	898.6	0.4	256.7	534.9	8.9	57126.0	32.1	21.6	43.3	64.9	86.5	108.1
440	1.6	897.5	0.4	256.4	534.2	8.9	57698.5	32.1	21.8	43.7	65.5	87.4	109.2
445	1.5	896.5	0.4	256.1	533.6	8.9	58271.0	32.0	22.1	44.1	66.2	88.3	110.3
450	1.5	895.4	0.4	255.8	533.0	8.9	58843.5	32.0	22.3	44.6	66.9	89.2	111.4
455	1.5	894.4	0.4	255.6	532.4	8.9	59415.9	31.9	22.5	45.0	67.5	90.0	112.5
460	1.5	893.4	0.4	255.3	531.8	8.9	59988.4	31.9	22.7	45.5	68.2	90.9	113.6
465	1.5	892.5	0.4	255.0	531.2	8.9	60560.9	31.9	22.9	45.9	68.8	91.8	114.7
470	1.5	891.5	0.4	254.7	530.7	8.8	61133.3	31.8	23.2	46.3	69.5	92.7	115.8
475	1.4	890.6	0.4	254.5	530.1	8.8	61705.8	31.8	23.4	46.8	70.2	93.6	117.0
480	1.4	889.7	0.4	254.2	529.6	8.8	62278.3	31.8	23.6	47.2	70.8	94.4	118.1
485	1.4	888.8	0.4	253.9	529.0	8.8	62850.8	31.7	23.8	47.7	71.5	95.3	119.2
490	1.4	887.9	0.4	253.7	528.5	8.8	63423.2	31.7	24.1	48.1	72.2	96.2	120.3
495	1.4	887.1	0.4	253.4	528.0	8.8	63995.7	31.7	24.3	48.5	72.8	97.1	121.4
500	1.4	886.2	0.4	253.2	527.5	8.8	64568.2	31.7	24.5	49.0	73.5	98.0	122.5

5 Regulator Setting Guidelines – 1 Diver

1	2	3	4	5	6
Bell Depth	BPR Loader	Make-Up Reg.	O_2 Reg.	Diver Supply (Bell)	Bell BPR Loader
msw	Barg	Barg	Barg	Barg	msw
30	1.0	18.6	19.0	14.0	-15.0
35	1.4	19.3	19.0	14.0	-15.0
40	1.8	20.0	19.0	14.0	-15.0
45	2.2	20.7	19.0	14.0	-15.0
50	2.6	21.4	19.0	14.0	-15.0
55	3.0	22.1	19.0	14.0	-15.0
60	3.3	22.7	19.0	14.0	-15.0
65	3.7	23.4	19.0	14.0	-15.0
70	4.1	24.1	19.0	14.0	-15.0
75	4.5	24.8	19.0	14.0	-15.0
80	4.9	25.5	19.0	14.0	-15.0
85	5.3	26.2	19.0	14.0	-15.0
90	5.7	26.9	19.0	14.0	-15.2
95	6.1	27.6	19.0	14.0	-15.5
100	6.5	28.2	19.0	14.0	-15.8
105	6.9	28.9	19.0	14.0	-16.1
110	7.3	29.6	19.0	14.0	-16.3
115	7.8	30.3	19.0	14.0	-16.6
120	8.2	31.0	19.0	14.0	-16.9
125	8.7	31.7	19.0	14.0	-17.2
130	9.1	32.4	19.0	14.0	-17.5
135	9.6	33.1	19.0	14.0	-17.8
140	10.0	33.7	19.0	14.0	-18.1
145	10.5	34.4	19.0	14.0	-18.4
150	11.0	35.1	19.0	14.0	-18.7
155	11.4	35.8	19.0	14.0	-18.9
160	11.9	36.5	19.0	14.0	-19.2
165	12.3	37.2	19.0	15.0	-19.5
170	12.7	37.9	19.0	15.0	-19.8
175	13.2	38.6	19.0	15.0	-20.1
180	13.6	39.2	19.0	15.0	-20.4
185	14.1	39.9	19.0	15.0	-20.7
190	14.6	40.6	19.0	15.0	-21.0
195	15.0	41.3	19.3	15.0	-21.3
200	15.5	42.0	19.7	16.0	-21.5
205	15.9	42.3	20.0	16.0	-21.8
210	16.3	43.0	20.3	16.0	-22.1
215	16.8	43.8	20.7	16.0	-22.4
220	17.2	44.6	21.0	16.0	-22.7
225	17.7	45.3	21.3	16.0	-23.0
230	18.1	46.1	21.7	16.0	-23.3
235	18.6	46.8	22.0	17.0	-23.6
240	19.0	47.6	22.3	17.0	-23.8
245	19.5	48.4	22.7	17.0	-24.1
250	20.0	49.1	23.0	17.0	-24.4

Applicable to a Standard Electric Gasmizer System when using a JFD Ultrajewel 601 Helmet.

1 BELL DEPTH: This is the depth of the Bell at the bottom of the trunk

2 BPR LOADER: This is the Back Pressure Regulator Loader on the Gasmizer Control Console. This sets the Main Exhaust Umbilical Pressure

3 MAKE-UP REG: This is the Make-Up Regulator on the Make-Up Panel of the Gasmizer Control Console. This sets the minimum Volume Tank pressure

4 O_2 REG: This is the Oxygen Regulator on the Oxygen Panel of the Gasmizer Control Console. This setting will provide 1.2 litres per minute oxygen flow. Occasional adjustments maybe required depending on the diver work rate.

5 DIVERS SUPPLY (BELL): This is the Divers Supply Pressure setting on the Bell Diver Supply Regulator.

6 BELL BPR LOADER: This is the Bell BPR Loader setting required for the Ultrajewel 601 Helmet.

Regulator Setting Guidelines – 1 Diver (continued)

1	2	3	4	5	6
Bell Depth	BPR Loader	Make-Up Reg.	O_2 Reg.	Diver Supply (Bell)	Bell BPR Loader
msw	barg	barg	barg	barg	msw
255	20.4	49.9	23.3	17.0	-24.7
260	20.7	50.7	23.7	17.0	-25.0
265	21.3	51.4	24.0	18.0	-25.3
270	21.7	52.2	24.3	18.0	-25.6
275	22.2	52.9	24.7	18.0	-25.9
280	22.6	53.7	25.0	18.0	-26.2
285	23.1	54.5	25.3	18.0	-26.4
290	23.5	55.2	25.7	18.0	-26.7
295	24.0	56.0	26.0	18.0	-27.0
300	24.5	56.8	26.3	19.0	-27.3
305	24.9	57.5	26.7	19.0	-27.6
310	25.3	58.3	27.0	19.0	-27.9
315	25.7	59.0	27.3	19.0	-28.2
320	26.2	59.8	27.7	19.0	-28.5
325	26.7	60.6	28.0	19.0	-28.8
330	27.1	61.3	28.3	19.0	-29.0
335	27.6	62.1	28.7	20.0	-29.3
340	28.0	62.9	28.9	20.0	-29.6
345	28.5	63.6	29.3	20.0	-29.9
350	29.0	64.4	29.7	20.0	-30.0
355	29.4	65.1	30.1	20.0	-30.1
360	29.8	65.9	30.6	20.0	-30.2
365	30.3	66.7	31.0	20.0	-30.3
370	30.7	67.4	31.4	20.0	-30.4
375	31.2	68.2	31.8	20.0	-30.5
380	31.6	69.0	32.2	20.0	-30.6
385	32.0	69.7	32.7	20.0	-30.7
390	32.5	70.5	33.1	20.0	-30.8
395	33.0	71.2	33.5	20.0	-30.9
400	33.4	72.0	33.9	20.0	-31.0
405	33.9	72.8	34.3	20.0	-31.1
410	34.3	73.5	34.7	20.0	-31.2
415	34.8	74.3	35.2	20.0	-31.3
420	35.2	75.1	35.6	20.0	-31.4
425	35.7	75.8	36.0	20.0	-31.5
430	36.1	76.6	36.4	20.0	-31.6
435	36.6	77.3	36.9	20.0	-31.7
440	37.0	78.1	37.3	20.0	-31.8
445	37.5	78.9	37.7	20.0	-31.9
450	37.9	79.6	38.1	20.0	-32.0
455	38.4	80.4	38.5	20.0	-32.1
460	38.8	81.2	39.0	20.0	-32.2
465	39.3	81.9	39.4	20.0	-32.3
470	39.7	82.7	39.8	20.0	-32.4
475	40.2	83.4	40.2	20.0	-32.5
480	40.7	84.2	40.6	20.0	-32.6
485	41.1	85.0	41.0	20.0	-32.7
490	41.6	85.7	41.5	20.0	-32.8
495	42.0	86.5	41.9	20.0	-32.9
500	42.5	87.3	42.3	20.0	-33.0

Applicable to a Standard Electric Gasmizer System when using a JFD Ultrajewel 601 Helmet.

1 BELL DEPTH: This is the depth of the Bell at the bottom of the trunk

2 BPR LOADER: This is the Back Pressure Regulator Loader on the Gasmizer Control Console. This sets the Main Exhaust Umbilical Pressure

3 MAKE-UP REG: This is the Make-Up Regulator on the Make-Up Panel of the Gasmizer Control Console. This sets the minimum Volume Tank pressure

4 O_2 REG: This is the Oxygen Regulator on the Oxygen Panel of the Gasmizer Control Console. This setting will provide 1.2 litres per minute oxygen flow. Occasional adjustments maybe required depending on the diver work rate.

5 DIVERS SUPPLY (BELL): This is the Divers Supply Pressure setting on the Bell Diver Supply Regulator.

6 BELL BPR LOADER: This is the Bell BPR Loader setting required for the Ultrajewel 601 Helmet.

6 Regulator Setting Guidelines – 2 Divers

1	2	3	4	5	6
Bell Depth	BPR Loader	Make-Up Reg.	O_2 Reg.	Diver Supply (Bell)	Bell BPR Loader
msw	barg	barg	barg	barg	msw
30	1.0	18.6	39.0	14.0	-15.0
35	1.4	19.3	39.0	14.0	-15.0
40	1.8	20.0	39.0	14.0	-15.0
45	2.2	20.7	39.0	14.0	-15.0
50	2.6	21.4	39.0	14.0	-15.0
55	3.0	22.1	39.0	14.0	-15.0
60	3.3	22.7	39.0	14.0	-15.0
65	3.7	23.4	39.0	14.0	-15.0
70	4.1	24.1	39.0	14.0	-15.0
75	4.5	24.8	39.0	14.0	-15.0
80	4.9	25.5	39.0	14.0	-15.0
85	5.3	26.2	39.0	14.0	-15.0
90	5.7	26.9	39.0	14.0	-15.2
95	6.1	27.6	39.0	14.0	-15.5
100	6.5	28.2	39.0	14.0	-15.8
105	6.9	28.9	39.0	14.0	-16.1
110	7.3	29.6	39.0	14.0	-16.3
115	7.8	30.3	39.0	14.0	-16.6
120	8.2	31.0	39.0	14.0	-16.9
125	8.7	31.7	39.0	14.0	-17.2
130	9.1	32.4	39.0	14.0	-17.5
135	9.6	33.1	39.0	14.0	-17.8
140	10.0	33.7	39.0	14.0	-18.1
145	10.5	34.4	39.0	14.0	-18.4
150	11.0	35.1	39.0	14.0	-18.7
155	11.4	35.8	39.0	14.0	-18.9
160	11.9	36.5	39.0	14.0	-19.2
165	12.3	37.2	39.0	15.0	-19.5
170	12.7	37.9	39.0	15.0	-19.8
175	13.2	38.6	39.0	15.0	-20.1
180	13.6	39.2	39.0	15.0	-20.4
185	14.1	39.9	39.0	15.0	-20.7
190	14.6	40.6	39.0	15.0	-21.0
195	15.0	41.3	39.0	15.0	-21.3
200	15.5	42.0	39.0	16.0	-21.5
205	15.9	42.3	39.0	16.0	-21.8
210	16.3	43.0	39.0	16.0	-22.1
215	16.8	43.8	39.0	16.0	-22.4
220	17.2	44.6	39.0	16.0	-22.7
225	17.7	45.3	39.0	16.0	-23.0
230	18.1	46.1	39.0	16.0	-23.3
235	18.6	46.8	39.0	17.0	-23.6
240	19.0	47.6	39.0	17.0	-23.8
245	19.5	48.4	39.0	17.0	-24.1
250	20.0	49.1	39.0	17.0	-24.4

Applicable to a Standard Electric Gasmizer System when using a JFD Ultrajewel 601 Helmet.

1 BELL DEPTH: This is the depth of the Bell at the bottom of the trunk

2 BPR LOADER: This is the Back Pressure Regulator Loader on the Gasmizer Control Console. This sets the Main Exhaust Umbilical Pressure

3 MAKE-UP REG: This is the Make-Up Regulator on the Make-Up Panel of the Gasmizer Control Console. This sets the minimum Volume Tank pressure

4 O_2 REG: This is the Oxygen Regulator on the Oxygen Panel of the Gasmizer Control Console. This setting will provide 1.2 litres per minute oxygen flow. Occasional adjustments maybe required depending on the diver work rate.

5 DIVERS SUPPLY (BELL): This is the Divers Supply Pressure setting on the Bell Diver Supply Regulator.

6 BELL BPR LOADER: This is the Bell BPR Loader setting required for the Ultrajewel 601 Helmet.

Regulator Setting Guidelines – 2 Divers (continued)

1	2	3	4	5	6
Bell Depth	BPR Loader	Make-Up Reg.	O_2 Reg.	Diver Supply (Bell)	Bell BPR Loader
msw	barg	barg	barg	barg	msw
255	20.4	49.9	39.0	17.0	-24.7
260	20.7	50.7	39.0	17.0	-25.0
265	21.3	51.4	39.0	18.0	-25.3
270	21.7	52.2	39.0	18.0	-25.6
275	22.2	52.9	39.0	18.0	-25.9
280	22.6	53.7	39.0	18.0	-26.2
285	23.1	54.5	39.0	18.0	-26.4
290	23.5	55.2	39.0	18.0	-26.7
295	24.0	56.0	39.0	18.0	-27.0
300	24.5	56.8	39.0	19.0	-27.3
305	24.9	57.5	39.1	19.0	-27.6
310	25.3	58.3	39.3	19.0	-27.9
315	25.7	59.0	39.5	19.0	-28.2
320	26.2	59.8	39.7	19.0	-28.5
325	26.7	60.6	40.0	19.0	-28.8
330	27.1	61.3	40.2	19.0	-29.0
335	27.6	62.1	40.4	20.0	-29.3
340	28.0	62.9	40.6	20.0	-29.6
345	28.5	63.6	40.8	20.0	-29.9
350	29.0	64.4	41.0	20.0	-30.0
355	29.4	65.1	41.2	20.0	-30.1
360	29.8	65.9	41.4	20.0	-30.2
365	30.3	66.7	41.6	20.0	-30.3
370	30.7	67.4	41.8	20.0	-30.4
375	31.2	68.2	42.0	20.0	-30.5
380	31.6	69.0	42.3	20.0	-30.6
385	32.0	69.7	42.5	20.0	-30.7
390	32.5	70.5	42.7	20.0	-30.8
395	33.0	71.2	42.9	20.0	-30.9
400	33.4	72.0	43.1	20.0	-31.0
405	33.9	72.8	43.3	20.0	-31.1
410	34.3	73.5	43.5	20.0	-31.2
415	34.8	74.3	43.7	20.0	-31.3
420	35.2	75.1	44.0	20.0	-31.4
425	35.7	75.8	44.4	20.0	-31.5
430	36.1	76.6	44.7	20.0	-31.6
435	36.6	77.3	45.1	20.0	-31.7
440	37.0	78.1	45.5	20.0	-31.8
445	37.5	78.9	45.9	20.0	-31.9
450	37.9	79.6	46.2	20.0	-32.0
455	38.4	80.4	46.6	20.0	-32.1
460	38.8	81.2	47.0	20.0	-32.2
465	39.3	81.9	47.4	20.0	-32.3
470	39.7	82.7	47.7	20.0	-32.4
475	40.2	83.4	48.1	20.0	-32.5
480	40.7	84.2	48.5	20.0	-32.6
485	41.1	85.0	48.9	20.0	-32.7
490	41.6	85.7	49.2	20.0	-32.8
495	42.0	86.5	49.6	20.0	-32.9
500	42.5	87.3	50.0	20.0	-33.0

Applicable to a Standard Electric Gasmizer System when using a JFD Ultrajewel 601 Helmet.

1 BELL DEPTH: This is the depth of the Bell at the bottom of the trunk

2 BPR LOADER: This is the Back Pressure Regulator Loader on the Gasmizer Control Console. This sets the Main Exhaust Umbilical Pressure

3 MAKE-UP REG: This is the Make-Up Regulator on the Make-Up Panel of the Gasmizer Control Console. This sets the minimum Volume Tank pressure

4 O_2 REG: This is the Oxygen Regulator on the Oxygen Panel of the Gasmizer Control Console. This setting will provide 1.2 litres per minute oxygen flow. Occasional adjustments maybe required depending on the diver work rate.

5 DIVERS SUPPLY (BELL): This is the Divers Supply Pressure setting on the Bell Diver Supply Regulator.

6 BELL BPR LOADER: This is the Bell BPR Loader setting required for the Ultrajewel 601 Helmet.

7 System Operation at Extreme Depths

7.1 Deep Diving Procedure – Depth Greater than 200 msw (650 fsw)

When system operation is proposed at 200 meters and beyond, a number of system modifications are advised.

These arise principally from the increased pressure drops, which occur around the system when pumping a gas of increased density.

The main modifications are listed below.

1. To achieve acceptable breathing resistance at depth, the use of the Ultraflow regulator demand (Chapter 3 - Bell Equipment) is required.

2. The performance of all demand regulators deteriorate if the supply pressure fluctuates. For this reason, it is desirable to mount a volume tank on the bell connected into the dive supply umbilical in order to minimise pressure fluctuations during a breathing cycle.

3. Umbilical diameters should be chosen in accordance with Chapter 3 - Bell Equipment Table 1 Recommended Umbilical Sizes, and all pipework, from topside to the diver should be inspected to ensure the use of full bore fittings without any flow restrictions.

4. With these modifications, The Electric Gasmizer system is capable of supporting two divers to depths of 500 msw and beyond.

The Recommended Umbilical Sizes in Chapter 3 - Bell Equipment Table 1 Recommended Umbilical Sizes, gives guidelines for sizing umbilical. For more detailed information or for other applications, contact JFD.

7.2 Shallow Diving Procedure – Depth less than 30 msw (100 fsw)

In very shallow diving, users may experience insufficient suction in the exhaust system. In this case, consult procedure document P1805-PRC-2203 and contact JFD for advice if required.

8 Fault Finding

8.1 Fault Finding Gazmizer System

Problem	Probable Cause	Suggested Solution
Exhaust hose pressure above BPR value but booster suction is at correct value and no gas flow through reprocessing unit.	Float valve in reprocessing unit closed.	Close Reprocessing unit inlet valve and open vent valve at the bottom of the float valve and Filter 1 until the float can be heard to drop and all the water is removed from the float chamber and filter 1. Also, check receiver 1 and receiver 2 for water. Close drain valve and open exhaust return valve VERY SLOWLY otherwise the float will be blown to the top of the chamber and the same problem will recur.
Booster discharge pressure very high and no flow through reprocessing unit. Volume tank supply pressure well below booster discharge pressure.	Both scrubber canisters turned off so that there is no route through the system for the gas.	Place one scrubber canister on line.

8.2 Fault Finding Gasmizer Bell Equipment

Problem	Probable Cause	Suggested Solution
Diver loses suction at the Helmet Exhaust valve and finds difficulty exhaling: Diver goes “Open Circuit”.	1. Suction dropping due to booster having stopped.	Start booster.
	2. SAECO valve shut, closing off exhaust circuit. Bellman should check pin at top.	Ensure that diver has adequate supply pressure 10 bar (145 psi) minimum from the bell panel. Check whether bellman has turned diver’s supply gas off.
	3. Bellman may have shut diver exhaust manifold valve on the bell water trap.	Open valve.
	4. Hull valve 8 may have been closed by mistake.	Open hull valve 8.
	5. Diver tracking pneumo not following the diver and diver working above bell. (If Used)	Adjust diver tracking pneumo to give a bleed of approximately 0.4 litres per minute.
	6. BPR loader in the bell not set up properly. See section 5 (page 14).	Bellman closes valve 5 on the exhaust and sets up as on bell pre-dive checks.
	7. Bell umbilical and external water trap filled with water.	Diving may be continued by backing off very slightly on BPR loader in dive control. Set up to 1 bar below recommended value. Drain umbilical and water trap at the end of the bell run and check for lose fittings on the outside of the bell. Ensure that the divers helmet and mask are in good condition and not leaking water and the oral nasal properly fitted to lower exhaust connectors. Most importantly, bellman must always drain lower part of the internal water trap when filled with water.
Pressure increase in the system volume tank when make-up regulator is not flowing.	1. Diver using standby on board gas instead of umbilical supply in the bell.	Diver put on umbilical supply.
	2. Standby going down as umbilical supply and coming back up the exhaust hose to the volume tank.	Regulate standby gas below make up regulator pressure.

Problem	Probable Cause	Suggested Solution
Gas escaping from the bell into the exhaust circuit and the bellman has to blow down regularly to prevent water coming up the bell trunking.	1. Scrubbing valve 3 open.	Close valve 3.
	2. Water trap drain valve 7 open with isolation valve 6 pushed in.	Close valve 7.
	3. Leaks at inward relieving valves on umbilical fitting below valve 5.	Remove caps and check for gas being sucked into valves. Also check that relief valves on top of water trap are not relieving inwards by removing the caps.
	4. Valve 9 opened too far.	Set valve 9 as per bell check-off sheet.
	5. O-rings on isolation valve damaged or water trap large O-rings leaking.	Replace damaged O-rings.
	6. Hose to helmet not being dived disconnected, and valve 5 knocked open.	Close valve 5.
A great deal of gas being used for the dive but the diver assures the supervisor that he is on closed circuit and losing very few bubbles at this helmet.	1. Diver tracking pneumo flow set far too high.	Set to correct flow in the bell of 0.4 litres/min. maximum. When the diver leaves the bell there should be one bubble every 10-20 seconds at the tracking pneumo end on his umbilical.
	2. Loose fittings on the outside of the bell or the inside of the bell losing gas.	Tighten up all fittings.

Intentionally blank

Chapter 9 - Spares List

Contents

Title **page**

1 Spares Kit List 9.2
2 Part Assembly – C10700 . . . . . 9.3
2.1 Reprocessing Unit 9.3
3 Part Assembly – C10710 . . . . . 9.4
3.1 Electric Control Console 9.4
4 Part Assembly – C10880 . . . . . 9.5
4.1 1 Diver Bell Equipment 9.5
5 Part Assembly – C10730 . . . . . 9.6
5.1 2 Diver Bell Equipment 9.6
6 Part Assembly – B10400 . . . . . 9.7
6.1 Electric Gas Booster 9.7
7 Part Assembly - B39750 . . . . . 9.9
7.1 Low Inlet Pressure Cut-Out Kit 9.9
8 Post 2004 (JFD Build) Gas Booster Parts List 9.10
8.1 Fabrications 9.10
8.2 Main Components 9.11
8.3 Pipe Fittings 9.11
8.4 Labels 9.12
8.5 Misc 9.12
8.6 Electrical 9.12
8.7 Fasteners 9.14

1 Spares Kit List

To ensure good service from your Gasmizer System and reduction of maintenance shut down periods, it is recommended that the following spares are held for each system.

Part No.	Description
C10700	Spares Kit, Reprocessing Unit
C10710	Spares Kit, Electric Control Console
C10880	Spares Kit, 1 Bell Diver Equipment
C10730	Additional spares to accommodate 2 Diver Bell Equipment
B10400	Spares Kit, Electric Gas Booster
B10590	Spares Kit, Electric Gasmizer System (Comprises all above kits)
B39750*	Low Inlet Pressure Cut-out Kit, Electric Gasmizer
Comprehensive details of the above Spares Kit are provided in the following pages.	

Note ***If ordering spares kit for a 2 Diver Bell Equipment (B1496A) this requires kit C10730 in addition to the spares kit for 1 Diver Bell Equipment (C10880).***

*Kit only applied in builds before November 2012.

2 Part Assembly – C10700

2.1 Reprocessing Unit

Part No.	Description	Size	Qty.
DM13540	VALVE,BALL,ASSY (REF VB399)	3/8” FNPT	2.00
DM13550	VALVE,BALL,ASSY (REF VB699)	3/4”FNPT	1.00
FB002	FSTR,SCREW,HEX HEAD.	1/4”UNC X 3/4”	12.00
FB004	FSTR,SCREW,HEX HEAD.	1/4”UNC X 1 1/4”	12.00
FB005	FSTR,SCREW, HEX HEAD.	1/4”UNC X 1 1/2”	12.00
FB010	FSTR,SCREW,SOCKET HEAD	1/4”UNC X 1”	6.00
FE002	FLTR,ELEMENT	1 MICRON	4.00
FE003	FLTR,ELEMENT	0.01 MICRON	2.00
FE004	FLTR,ELEMENT,PAD	1 MICRON 3” DIA	12.00
FN001	FSTR,NUT.	1/4”UNC	20.00
FN002	FSTR,NUT,ACORN.	1/4”UNC	6.00
FS201	FTG,CONNECTOR,MALE	1/4”TUBE - 1/4”MNPT	2.00
FS211	FTG,FERRULES,B & F	1/4”TUBE	2.00
FS292	FTG,FERRULE, B & F	1/4”TUBE	2.00
FW001	FSTR,WASHER,STAR	1/4”BOLT	18.00
GP203	GAUGE,PRESSURE,02	2.5”/0 - 1000 psi	2.00
R28700	TUBE,BPR	REF RK207	1.00
RN019-7	O RING		4.00
RN229-7	O RING		3.00
RN232-7	O RING		6.00
RN341-7	O RING		6.00
RN343-7	O RING		4.00
RN784-7	O RING		4.00
TA023	TOOL,ALLEN KEY	3/16”	1.00
TA024	TOOL,ALLEN KEY	3/32”	1.00
V1182	FLOAT		1.00
VK25P	SEAL KIT FOR 4R3A RELIEF VALVE		2.00
VK34	SEAL KIT FOR DM13540 (3/8” NPT)		1.00
VK61	SEAL KIT FOR DM13550 (3/4” NPT)		1.00
VM004	BALL FOR 6113F4B		1.00
VM005	GASKET FOR 6113F4B		1.00
VM006	SPRING FOR 6113F4B		1.00
VM043	SPRING, RELIEF VALVE	1500 - 2500 psi	1.00
VM048	PANEL NUT	NO 4	2.00

3 Part Assembly – C10710

3.1 Electric Control Console

Part No.	Description	Size	Qty.
EM005	ELEC,SWITCH,INDICATOR		1.00
EM012	ELEC,LENS,RED		1.00
EM013	ELEC,LENS,GREEN		1.00
EM014	ELEC,LENS,YELLOW		1.00
EM015	ELEC,FUSE (SEE ALSO EM211)	1AMP X 1 1/4”	10.00
EM016	ELEC,BULB,WEDGE	12V/100MA	10.00
EM054	ELEC,REED ASSY FOR DM2362		1.00
EM534	KIT, INDICATOR ASSY, RED	110 V AC	1.00
EM535	KIT, START BUTTON ASSY, GREEN		1.00
EM536	KIT, STOP BUTTON ASSY, MUSHROOM HEAD		1.00
EM537	KIT, INDICATOR ASSEMBLY, GREEN	110 V AC	2.00
FB012	FSTR,SCREW,PAN HEAD	1/4”UNC X 1/2”	6.00
GP201	GAUGE,PRESSURE	4”/0 - 1000 psi	1.00
GP202	GAUGE,PRESSURE,O2	2.5” /0 - 3000 psi	1.00
RK201	SPARES KIT FOR 44-1113-24		1.00
RK202	SPARES KIT FOR 44-1112-24-001		1.00
RK204	PARES KIT FOR 44-1316-2081-005		1.00
RN015-7	O RING		4.00
RN110-7	O RING		4.00
VB201	VALVE,BALL,1/4” BRASS		1.00
VC202	VALVE,CHECK,1/4” FNPT		1.00
VE101	VALVE,SOLENOID,1/8” FNPT 12 VDC		1.00
VK23P	SEAL KITFOR B-IKM4		1.00
VM004	BALL FOR 6112F4B		3.00
VM005	GASKET FOR 6113F4B		3.00
VM006	SPRING FOR 6113F4B		3.00
VM048	PANEL NUT	NO 4	1.00
VS201	VALVE, SHUT OFF	1/4” MNPT	1.00

4 Part Assembly – C10880

4.1 1 Diver Bell Equipment

Part No.	Description	Size	Qty
DM173D	TOP TUBE W/BAFFLE		1.00
FB010	FSTR,SCREW,SOCKET HEAD	1/4”UNC X 1”	6.00
FB016	FSTR,SCREW,SOCKET HD DIA. 6.2MM	10UNC X 1”	4.00
FN003	FSTR,NUT,BUTTERFLY	1/4”UNC	2.00
MC001	MISC,SILENCER		1.00
R28700	TUBE,BPR	REF RK207	1.00
RN014-7	O RING		2.00
RN015-7	O RING		2.00
RN018-7	O RING		2.00
RN026-7	O RING		2.00
RN110-7	O RING		1.00
RN155-7	O RING		8.00
RN210-7	O RING		8.00
RN784-7	O RING		2.00
V1182	FLOAT		1.00
VC20P	VALVE,CAP,DEFLECTOR	1/4” FNPT	1.00
VK34	SEAL KIT FOR DM13540	3/8” NPT	1.00
VK61	SEAL KIT FOR DM13550	3/4” NPT	4.00
VM007	O RING FOR 4CPA2-3		2.00
VM008	O RING FOR 8CPA2-3		2.00
VM009	SPRING FOR 4CPA2-3		2.00
VM010	SPRING FOR 8CPA2-3		2.00

5 Part Assembly – C10730

5.1 2 Diver Bell Equipment

Part No.	Description	Size	Qty
RN014-7	O RING		2.00
RN015-7	O RING		2.00
RN018-7	O RING		2.00
RN026-7	O RING		2.00
RN210-7	O RING		8.00
VK34	SEAL KIT FOR DM13540	3/8” NPT	2.00
VK61	SEAL KIT FOR DM13550	3/4” NPT	2.00
VM007	O RING FOR 4CPA2-3		5.00
VM009	SPRING FOR 4CPA2-3		4.00
VM036	O RING FOR 4CPAZ-3		4.00
VM037	O RING FOR 4P-4T		8.00
VM038	SPRING FOR 4CPZ-1		4.00

6 Part Assembly – B10400

6.1 Electric Gas Booster

Part No.	Description	Size	Qty
EM091	ELEC,BULBS FOR EM075 &EM076	6.3V/0.3A	5.00
EM534	KIT, INDICATOR ASSY, RED, 110 V AC		1.00
EM535	KIT, START BUTTON ASSY, GREEN		1.00
GC064	EGC,O RING SEAL	24MM ID/30MM OD	2.00
GC065	EGC, U RING SEAL		2.00
GC164	EGC,SERVICE KIT WATER PUMP		1.00
GE001	EGB,SPRING		1.00
GE002	EGB,BEARING,NEEDLE ROLLER		2.00
GE003	EGB,ST.1 PISTON RING		7.00
GE004	EGB,GUIDE RING		1.00
GE005	EGB,PISTON RING		7.00
GE006	EGB,GUIDE RING		1.00
GE007	EGB,CIRCLIP		4.00
GE009	EGB, O RING,PRESS. PACKING		2.00
GE010	EGB, WIPER PACKINGS		2.00
GE011	EGB,VALVE ASSY		1.00
GE012	EGB, VALVE ASSY		1.00
GE013	EGB, VALVE ASSY		1.00
GE014	EGB,SHELLS		2.00
GE015	EGB,WASHER,TAB LOCK		4.00
GE016	EGB,BUSH		4.00
GE017	EGB,CNTR,BEARING SHELL		1.00
GE018	EGB,THRUST WASHER		2.00
GE019	OIL PUMP ASSY		1.00
GE020	EGB,VALVE UNLOADER		1.00
GE021	EGB,SPRING		2.00
GE022	EGB,GASKET		2.00
GE023	EGB,GASKET		2.00
GE024	EGB,GASKET		2.00
GE025	EGB,GASKET		1.00
GE026	EGB,GASKET		2.00
GE027	EGB,GASKET		2.00
GE028	EGB,GASKET		1.00

Part No.	Description	Size	Qty
GE029	EGB,GASKET		1.00
GE030	EGB,GASKET		2.00
GE031	EGB, O RING		1.00
GE032	EGB, O RING		4.00
GE033	EGB, O RING		1.00
GE034	EGB, O RING		4.00
GE035	EGB, O RING		2.00
GE036	EGB, O RING		2.00
GE037	EGB, O RING		2.00
GE038	EGB, O RING		1.00
GE039	EGB, O RING		2.00
GE041	EGB, O RING		4.00
GE042	EGB, OIL SEAL		1.00
GE050	EGB, CONTROL FUSE		2.00
GE053	EGB, SEAL		2.00
GE055	EGB,SOFT SPARES KIT		1.00
GE058	EGB, O RING,PISTON	ST30121	1.00
GE060	EGB,SPARES KIT	K80	1.00
GE061	EGB,SPARES KIT, CHECK VALVE		1.00
GE062	EGB,SEAL	60-70	3.00
GE066	EGB,PRESS PACK'S SPRINGS & RINGS		2.00
GE076	EGB,TOOL,VALVE/HEAD ASSY		1.00
GE077	EGB,TOOL,PACKING LOADING		1.00
GE080	EGB,MOTOR FUSE	50HP	3.00
GE082	EGB,ST.2,RELIEF VALVE		1.00
GE086	FLTR,OIL CARTRIDGE		2.00
GE087	SOLENOID VALVE	110V/50HZ 1/4" NPTF	1.00
GP203-3	GAUGE,PRESSURE	2.5" 0 - 160 psi	1.00
GP218-0	GAUGE.PRESSURE 2.5" 0	1000PSI - 1/4"(M) NPT	1.00
GP222-1	GAUGE,PRESSURE 2.5" 0	1600 psi - 1/4"(M) NPT	1.00
B10510311	PRESSURE CONTROL VALVE		1.00

7 Part Assembly - B39750

7.1 Low Inlet Pressure Cut-Out Kit

Part No.	Description
B10510334	LABEL, KIT GAS BOOSTER, ELEC 50HP
B10510335	SWITCH, PRESS, 0.3-1.5 BAR, G1/4”, SUCO
B10510336	BRACKET, VACUUM SWITCH, JUNCTION BOX, BOOSTER
CL018	CABLE, ELEC, BLACK, 0.75 SQ.MM/3 CORE
CL161	CABLE, TRI-RATED, BLACK, 1.5MM, 21A RATED
DD400854	ADAPTOR, 3/4" BSP M X 1/4" BSP F, FORM B
DD401128	SEAL,BONDED, 1/4" BSP ST. STEEL, SELF CENTRING
DD500351	CONDUIT, NYLON, GREY, 20MM OD/M
DD500362	CONNECTOR, CONDUIT, STRAIGHT, NYLON GREY, M20/20MM
DD500391	CLIP, MOUNTING, CONDUIT, NYLON, GREY, 20MM
E11965	FERRULE, BOOTLACE, BLACK, 1.5MM2
EM047	CRIMP, SPADE, RED, 4BA
EM160	RAIL,DIN (TOP HAT SECTION), 500MM
EM2047	RELAY, 4POLE CHANGEOVER, 110VAC COIL
EM3017	FERRULE, BOOTLACE, GREY, 0.75MM
EM3245	FERRULE, BOOTLACE, TWIN ENTRY, 1.5MM, BLACK
EM34211	DOUBLE NO CONTACT, ZBE 203, TELEMECANIQUE
EM3429	BASE, RELAY, DIN MOUNT, USE WITH EM2047
EM3430	LIGHT, PILOT, RED, PANEL MOUNT, 110V
EM3433	RELAY, TIME, ON-DELAY, 2-60 SEC, SPDT, 8A, 110V
EM3434	TERMINAL, DIN RAIL, 35A, ENTRELEC
EM3550	END CAP, CONDUIT, 20MM

8 Post 2004 (JFD Build) Gas Booster Parts List

8.1 Fabrications

Component	Description
B10510301	FABRICATION, BASE & FRAME, GAS BOOSTER, ELEC 50HP
B10510302	BAR, JAMMING, MOTOR ADJUST,GAS BOOSTER, ELEC 50HP
B10510304	FABRICATION, HEADER TANK, GAS BOOSTER, ELEC 50HP
B10510306	MOUNT, ADJUSTMENT, WATER PUMP, GAS BOOSTER
B10510307	GUARD, INNER, FABRICATION, GAS BOOSTER, ELEC 50HP
B10510308	GUARD, COVER PLATE, GAS BOOSTER, ELEC 50HP
B10510309	GUARD COVER SECURING BRACKET, GAS BOOSTER, 50HP
B10510316	SUPPORT, TOP, STARTER PANEL, GAS BOOSTER ELEC 50HP
B10510317	SUPPORT, BTM, STARTER PANEL, GAS BOOSTER ELEC 50HP
B10510318	SUPPORT, GUARD, REMOVEABLE, GAS BOOSTER ELEC 50HP
B10510326	BRACKET, SUPPT, SEA WATER, PIPE, GAS BOOSTER ELEC
B10510327	BRACKET, SUPPORT, PMP WATER, GAS BOOSTER ELEC 50HP
B10510328	WASHER, ADJUST, WATER PUMP, GAS BOOSTER
B10510310	GUARD, WATER PUMP, GAS BOOSTER ELEC 50HP

8.2 Main Components

Component	Description
VC420	VALVE, CHECK 1/2” BSPPFM, 3000 psi WP, MODIFIED
GC225	BALL VALVE, 43123
GC271	EGC, WATER PUMP
GC364	PULLEY,GROOVE, 42858,
GE040	REGULATOR,BYPASS, GAS BOOSTER
GE087	VALVE,SOLENOID,110V/50HZ, 1/4"FNPT
GE098	HEAT EXCHANGER(SEAWATER)
GE100	SWITCH,HP CUT OUT, 2ND STAGE
GE113	VALVE, INLET SHUT OFF, C/W ACTUATOR
GP258	GAUGE, PRESS, 2.5",0-160PSI, PM, REAR 1/4" MNPT
GP268	GAUGE, 63MM, 0-1600PSI, 1/4"MNPT REAR ENTRY
GP269	GAUGE, PANEL, CLAMP, 63MM, 0-1000PSI
B10510305	NUT, PANEL MOUNT, FOR B10510311
B10510303	PANEL, STARTER, GAS BOOSTER, 50HP
B10510311	PRESSURE CONTROL VALVE, PARKER VERIFLOW
B10510312	VALVE,SOLENOID, UNLOADER,(W/COIL NOL111P3)
B10510313	SWITCH,1ST STAGE PRESSURE
B10510314	SAFETY RELIEF VALVE 130PSI
DD8B1800	V BELT,PB,B1800
DD8C0250-5	PULLEY,T'LOCK.250 X 5SPC
DD8C2900	BELT,VEE, PB C2900
DD8T3525-60	BUSH, TAPERLOCK 3525 X 60MM
DD363225	MOTOR, ELECTRIC, 37KW, 380-415V, CAST IRON FRAME
FA011	FLTR, 6 MM TUBE, 60 MICRON, TEE-TYPE
B10510315	FILLER CAP AND NECK, COMPRESSOR, 7PSI

8.3 Pipe Fittings

For pipe fittings refer to Appendix A, Pipework, Main Gas Circuit, B10510AA Booster B10510101S1, on page A52

8.4 Labels

Component	Description
T1060	NAMEPLATE, DIVEX,GENERAL
T1063	LABEL, DIVEX LOGO, SELF ADHESIVE,350MM X 214MM
T7400	LABEL, ELECTRIC GASMIZER, 12" X 4.5"
B10510319	LABEL, GAS INLET, GAS BOOSTER, ELEC 50HP
B10510320	LABEL, GAS OUTLET, GAS BOOSTER, ELEC 50HP
B10510321	LABEL, BPR CONNECTION, GAS BOOSTER, ELEC 50HP
B10510322	LABEL, UNLOADER EXHAUST, GAS BOOSTER, ELEC 50HP
B10510323	LABEL, SEAWATER IN, GAS BOOSTER, ELEC 50HP
B10510324	LABEL, SEAWATER OUT, GAS BOOSTER, ELEC 50HP

8.5 Misc

Component	Description
SM143	OIL, COMPRESSOR, ANDEROL 555, 20 LITRE DRUM
DD362075	MOUNT,RUBBER,DIA 50 X M10 STEMS,30 MM THICK
DD362078	MOUNT,RUBBER, DIA 50 X M10 MALE/FEM
KI17019	ANTIFREEZE, 20 LITRE

8.6 Electrical

Component	Description
KI17319	GLAND,CABLE,M20,390-050
CL018	CABLE,ELEC,BLACK, 0.75 SQ.MM/3 CORE
DD360327-2	PRESSURE SWITCH.DIN.CAP
DD500342	CRIMP, UNINSULATED, 10 SQ MM/8MM
DD500350	CONDUIT, NYLON, GREY, 16MM OD/M
DD500351	CONDUIT, NYLON, GREY, 20MM OD/M
DD500353	CONDUIT, NYLON, GREY, 32MM OD/M
DD500359	M50/M32 BRASS REDN BUSH INCL L/N
DD500360	CONNECTOR,CONDUIT,STRAIGHT,NYLON,GREY,M16/16MM
DD500362	CONNECTOR,CONDUIT,STRAIGHT,NYLON,GREY,M20/20MM
DD500364	CONNECTOR,CONDUIT,STRAIGHT,NYLON,GREY,M32/32MM
DD500371	CONNECTOR,CONDUIT,ELBOW,NYLON,GREY,M20/20MM
DD500384	LOCKNUT,CONNECTOR,CONDUIT,NYLON,GREY,16MM
DD500385	LOCKNUT,CONNECTOR,CONDUIT,NYLON,GREY,20MM

Component	Description
DD500391	CLIP,MOUNTING,CONDUIT,NYLON,GREY,20MM
DD500401	WASHER,JOINT,20MM
DD720500	CLAMP,PIPE, STAUFF TYPE LN, 6MM DIA.
DD720511	CLAMP,PIPE, TWIN, STAUFF TYPE LNG, 6/6MM DIA.
DD720544	CLAMP, PIPE, STAUFF TYPE 3, 7/8" / 22MM O.D.PA
E10483	CABLE,10MM(SQ),TRI-RATED,RED, 100 MTR.
E11604	CABLE,10MM(SQ),TRIRATED,GREEN/YELLOW
EM12713	CRIMP, RING, UNINSULATED, 10 SQ MM, M10
EM12715	CRIMP, SPADE, RED, 1.5 SQ MM, M5
EM12719	TRUNKING, ROUND, SLOTTED, FLEXIBLE,30MM X 500MM LG
EM553	SLEEVE, PROTECTIVE, CONDUIT, 16 MM
EM562	FERRULE, BOOTLACE, 10 SQ MM
EM569	ENCLOSURE, IP54, 56MM X 56MM X 40MM
EM570	TEE, 20MM CONDUIT
EM7027	BUSH, REDUCING, BRASS, PG36 X M32

8.7 Fasteners

Component	Description
FB115	SCREW,GRUB, 1/4" UNC X 3/8"
FB441	SCREW,CAP,SCKT, M6 X1.0 X 45LG, SS 316
FB447	SCREW,M/C,PAN HD, M6 X 20MM
FB468	BOLT,HEX, M10 X 1.5 X 25 LG, BZP
FB471	SET SCREW,HEX, M16 X 2 X 110 LG, BZP
FB482	BOLT,HEX, M8 X 1.25 X 16 LG, BZP
FB483	BOLT,HEX, M8 X 1.25 X 25 LG, BZP
FB485	SET SCREW,HEX, M16 X 2 X 75 LG, BZP
FB486	BOLT,HEX, M10 X 1.5 X 15 LG, BZP
FB515	SCREW,BUTTON HEAD SOCKET, M6 X 1 X 15 LG, BZP
FB603	U BOLT, 1" NB PIPE
FJ235	CAP,NO6 JIC,BRASS, 6FNTXB
FJ324	ADAPTOR, 3/8" BSPP M X NO.6 JIC, ED TYPE
FN067	NUT,CLINCH, M6
FN107	NUT,NYLOC, M8, BZP
FN108	NUT,NYLOC, M10, BZP
FN114	NUT,NYLOC, M16, BZP
FW079	WASHER,PLAIN, M16, A4-70 (316) SS
FW141	WASHER, FORM 'A', M10, BZP
FW142	WASHER,M8, FORM A, BZP
FW143	WASHER,M6, FORM A, BZP
FW146	WASHER,M16, FORM A, BZP
KI10365	SCREW, M/C, PAN HEAD, 10-32 UNF X 1/2", A2-70

Schematic, Interconnecting, Electric Gasmizer
Sheet 1 of 2 . . . . . A.2
Sheet 2 of 2 . . . . . A.3

Schematic, Electric Gasmizer P180581595S1 . . . . . A.4

Booster Interface Information IFD1001006S1 . . . . . A.5

Gasmizer HP Reprocessing Unit IFD1001003S1 . . . . . A.6

Gasmizer HP Reprocessing Unit IFD1001004S1 . . . . . A.7

Tank, Volume, Gasmizer, Interface Information IFD1001007S1 . . . . . A.8

Control Console, Electric Gasmizer B81571
Sheet 1 of 2 . . . . . A.9
Sheet 2 of 2 . . . . . A.10

Control Console, Gasmizer Electric, 19” Rack Mount GA1009018S1 . . . . . A.11

P&ID 2 Diver Bell Equipment, Gasmizer System P1805901S1 . . . . . A.12

Pipework Schematic Bell Equipment (2 Diver) B81496S1 . . . . . A.13

Back Pressure Regulator (B.P.R.) Assembly B81221S1 . . . . . A.14

Water Trap Assy, Internal Bell Equipment P180556S1 . . . . . A.15

Loader, BPR Assembly 81242S1 . . . . . A.16

SAECO Valve Assembly C81151S1 . . . . . A.17

Valve, Isolating, Water Trap Assembly P180581248S1 . . . . . A.18

Valve, Outward Relief, 1/4” NPT Male 81322S1 . . . . . A.19

Valve, Inward Relief, 1/2” NPT Male 81323S1 . . . . . A.20

Valve, Inward Relief, 1/4” NPT Male 81322S1 . . . . . A.21

Bell External Water Trap General Assembly P180581491S1
Sheet 1 of 2 . . . . . A.22
Sheet 2 of 2 . . . . . A.23

Float / Check Valve Assembly P180581306S1 . . . . . A.24

P&ID, L.P. Gas System, Reprocessing Unit, Gasmizer System P1805902S1 A.25

P&ID, H.P. Gas System, Reprocessing Unit, Gasmizer System P1805903S1 A.26

LP Gas System Schematic P180524S1 . . . . . A.27

HP Gas System Schematic P180525S1 . . . . . A.28

Filter Housing, Long, Assy P180542S1 . . . . . A.29

Filter Housing, Short, Assy P180541R4 . . . . . A.30

Scrubber Housing Assembly C81115S1 . . . . . A.31

Canister Assembly with Removable End B81638S1 . . . . . A.32

Receiver Adaptor Assembly B81308
Sheet 1 of 3 . . . . . A.33
Sheet 2 of 3 . . . . . A.34

Flow Switch Assembly B82362S1 . . . . . A.35

Valve, Shutoff, 1/4” NPT Male C81359S1 . . . . . A.36

Regulator, Pressure, Sample 0-25 psi (0-1.7 bar) C81325S1 . . . . . A.37

Heat Exchanger, Gasmizer Topside Reprocessing Unit B81613S1 . . . . . A.38

P&ID, Control Console, Gasmizer System P1805905S1 . . . . . A.39

Pipework Schematic Control Panel B81174S1 . . . . . A.40

Pipework Schematic Oxygen Panel B81175S1 . . . . . A.41

Pipework Schematic Make-up Panel B81229S1 . . . . . A.42

Control Console, Electrical Assembly P1805266S1 . . . . . A.43

O2 Regulator 0 - 800 psi 81320S1 . . . . . A.44

Regulator, Pressure, 0 - 1500 psi 81321S1 . . . . . A.45

Regulator, Pressure, 0 - 1500 psi P1805101S1 . . . . . A.46

P&ID, Gas Booster, Gasmizer System P1805904S1
Sheet 1 of 3 . . . . . A.47
Sheet 2 of 3 . . . . . A.48
Sheet 3 of 3 . . . . . A.49

Pipework, Main Gas Circuit, B10510AA Booster B10510101S1 . . . . . A.50

Starter Panel Schematic, Gas Booster B510105
Sheet 1 of 3 . . . . . A.51
Sheet 2 of 3 . . . . . A.52
Sheet 3 of 3 . . . . . A.53

Belt Drive Tension Adjustment 81924S1 . . . . . A.54

P&ID, Volume Tank 10 Bottle Pack P1805908S1 . . . . . A.55

Pipework Schematic 10 Bottle Pack P1805265S1 . . . . . A.56

Schematic, Interconnecting, Electric Gasmizer

Sheet 1 of 2

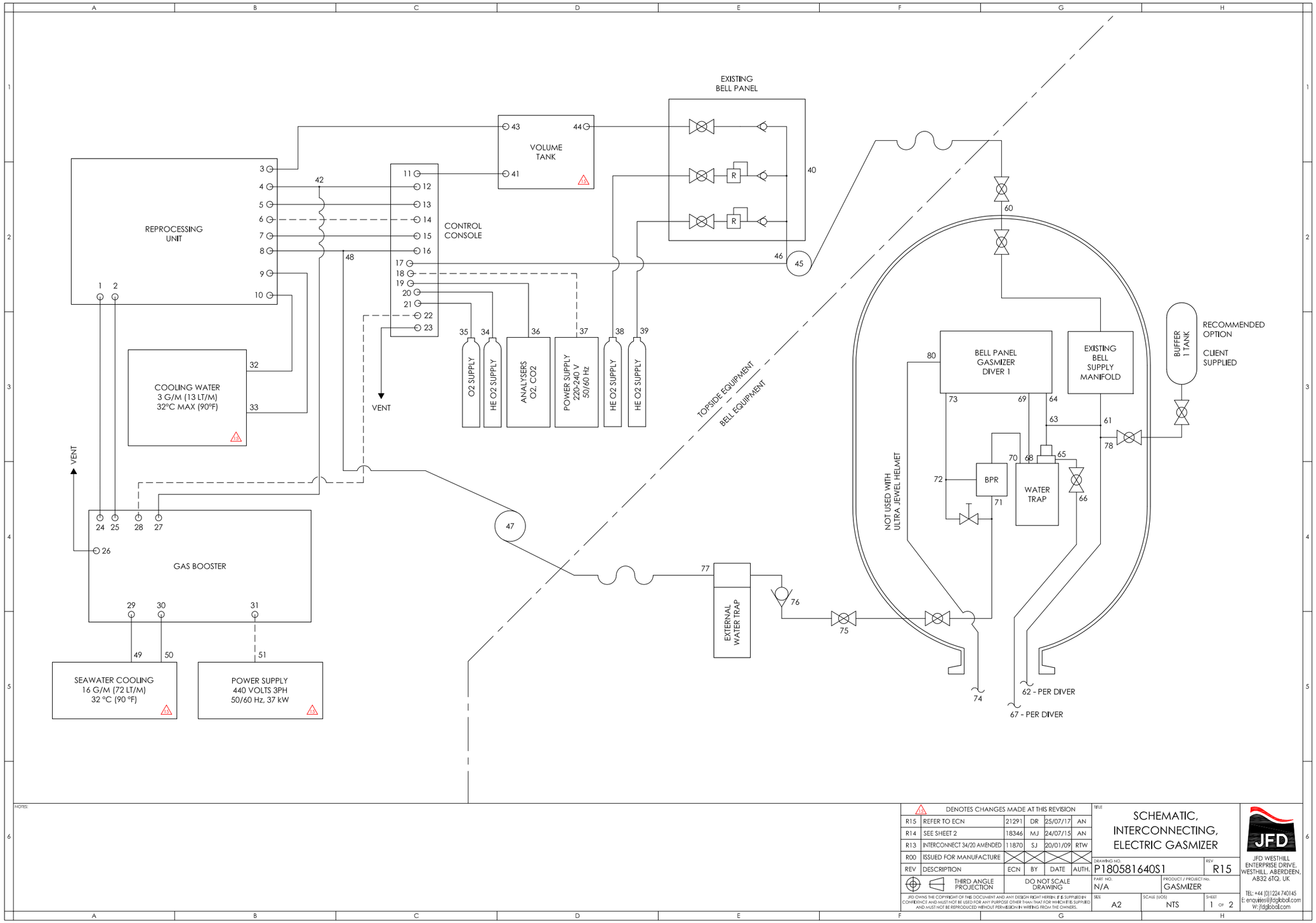

INTERCONNECT	FROM	TO	SYSTEM PRESSURE	STAINLESS TUBE INSTALATION			TUNGUM TUBE INSTALATION			CABLES
-	-	-	-	GRADE	DESCRIPTION	SWP	GRADE	DESCRIPTION	SWP	DESCRIPTION
24/1	GAS BOOSTER	REPROCESSING UNIT	100 BAR	316 SS	1/2" OD x .049 WALL	255 BAR	TUNGUM	1/2" OD x .065 WALL	283 BAR	-
2/25	REPROCESSING UNIT	GAS BOOSTER	68 BAR	316 SS	3/4" OD x .065 WALL	225 BAR	TUNGUM	3/4" OD x .065 WALL	181 BAR	-
32/10	COOLING WATER IN	COOLING WATER INLET R.U.	5 BAR	316 SS	1/2" OD x .049 WALL	255 BAR	TUNGUM	1/2" OD x .065 WALL	283 BAR	-
9/33	COOLING WATER OUT R.U.	COOLING WATER OUT	5 BAR	316 SS	1/2" OD x .049 WALL	255 BAR	TUNGUM	1/2" OD x .065 WALL	283 BAR	-
42/27	BPR LOADER TEE	GAS BOOSTER BPR LOADER	68 BAR	316 SS	1/4" OD x .028 WALL	310 BAR	TUNGUM	1/4" OD x .035 WALL	324 BAR	-
48/8	EXHAUST HOSE TEE	EXHAUST HOSE INLET R.U.	68 BAR	316 SS	3/4" OD x .065 WALL	225 BAR	TUNGUM	3/4" OD x .065 WALL	181 BAR	-
3/41	R.U. OUTLET	VOLUME TANK INLET 15	100 BAR	316 SS	1/2" OD x .049 WALL	255 BAR	TUNGUM	1/2" OD x .065 WALL	283 BAR	-
48/16	EXHAUST HOSE TEE	EXHAUST HOSE CC	68 BAR	316 SS	1/4" OD x .028 WALL	310 BAR	TUNGUM	1/4" OD x .035 WALL	324 BAR	-
44/40	VOLUME TANK	EXISTING BELL PANEL	100 BAR	316 SS	1/2" OD x .049 WALL	255 BAR	TUNGUM	1/2" OD x .065 WALL	283 BAR	-
7/15	SAMPLE TO CC - R.U.	SAMPLE INLET CC	0.5 BAR	316 SS	1/4" OD x .035 WALL	380 BAR	TUNGUM	1/4" OD x .035 WALL	324 BAR	-
11/41	MAKE UP OUT CC	VOLUME TANK MAKE UP 15	100 BAR	316 SS	1/2" OD x .049 WALL	255 BAR	TUNGUM	1/2" OD x .065 WALL	283 BAR	-
13/5	02 OUT CC	02 INLET R.U.	44 BAR	COPPER	1/4" OD x .035 WALL	150 BAR	-	-	-	-
12/42	BPR LOADER CC	BPR LOADER TEE	68 BAR	316 SS	1/4" OD x .028 WALL	310 BAR	TUNGUM	1/4" OD x .035 WALL	324 BAR	-
6/14	FLOWSWITCH R.U.	FLOWSWITCH ELECTRICAL CC	-	-	-	-	-	-	-	SUPPLIED 12FT
34/20	HE 02 SUPPLY	HE 02 SUPPLY CC	200 BAR	316 SS	1/2" OD x .049 WALL	255 BAR	TUNGUM	1/2" OD x .065 WALL	283 BAR	-
35/21	O2 SUPPLY	O2 SUPPLY CC	70 BAR	COPPER	1/4" OD x .035 WALL	150 BAR	-	-	-	-
19/36	SAMPLE OUT CC	SAMPLE ANALYSERS	0.5 BAR	316 SS	1/4" OD x .028 WALL	310 BAR	TUNGUM	1/4" OD x .035 WALL	324 BAR	-
37/18	POWER SUPPLY	ELECTRICAL IN CC	-	-	-	-	-	-	-	SUPPLIED 6FT
63/64	SAECO VALVE TEE	BELL PANEL PNEUMO BLEED	21 BAR	316 SS	1/4" OD x .028 WALL	310 BAR	BELL EQUIPMENT MUST BE STAINLESS STEEL			-
46/17	SUPPLY HOSE TEE	DIVER SUPPLY CC	100 BAR	316 SS	1/4" OD x .028 WALL	310 BAR	TUNGUM	1/4" OD x .035 WALL	324 BAR	-
46/45	SUPPLY HOSE TEE	UMBILICAL WINCH	100 BAR	316 SS	1/2" OD x .049 WALL	255 BAR	TUNGUM	1/2" OD x .065 WALL	283 BAR	-
61/63	SAECO SUPPLY TEE	SAECO VALVE TEE	21 BAR	316 SS	1/4" OD x .028 WALL	310 BAR	BELL EQUIPMENT MUST BE STAINLESS STEEL			-
78/62	BUFFER SUPPLY TEE	DIVER SUPPLY HOSE	21 BAR	-	-	-	-	-	-	-
67/66	DIVER EXHAUST HOSE	RELIEF VALVE FITTINGS	-3.5 BAR	-	-	-	-	-	-	-
68/69	WATER TRAP	NAGATIVE PRESSURE GUAGE	-3.5 BAR	316 SS	SUPPLIED	-	316 SS	SUPPLIED	-	-
73/72	BPR LOADER	BPR TEE	-3.5 BAR	316 SS	SUPPLIED	-	316 SS	SUPPLIED	-	-
71/75	BPR TEE	BELL PENETRATOR	-3.5 BAR	316 SS	SUPPLIED	-	316 SS	SUPPLIED	-	-
75/76	BELL PENETRATOR	CHECK V/V EXT WATER TRAP	68 BAR	316 SS	SUPPLIED	-	316 SS	SUPPLIED	-	-
77/47	EXTERNAI WATER TRAP	UMBILICAL WINCH	68 BAR	-	-	-	-	-	-	-
80/74	BPR LOADER VALVE	DIVER TRACKING PNEUMO	5 BAR	NOT USED WITH ULTRA JEWEL HELMET					-	-
63/65	SAECO VALVE TEE	SAECO VALVE	21 BAR	316 SS	SUPPLIED	-	316 SS	SUPPLIED	-	-
45/60	UMBILICAL WINCH	BELL PENETRATOR	100 BAR	-	-	-	-	-	-	-
47/48	UMBILICAL WINCH	EXHAUST HOSE TEE	68 BAR	316 SS	3/4" OD x .065 WALL	225 BAR	TUNGUM	3/4" OD x .065 WALL	181 BAR	-
26	GAS BOOSTER	ATMOSPHERE	-	316 SS	3/4" OD x .065 WALL	225 BAR	TUNGUM	3/4" OD x .065 WALL	181 BAR	-
49/29	SEAWATER IN	GAS BOOSTER	10 BAR	316 SS	1" OD x .065 WALL	170 BAR	TUNGUM	1" OD x .065 WALL	133 BAR	-
30/50	GAS BOOSTER	SEAWATER OUT	10 BAR	316 SS	1" OD x .065 WALL	170 BAR	TUNGUM	1" OD x .065 WALL	133 BAR	-
51/31	SHIPS 3-PH SUPPLY	ELEC BOOSTER STARTER BOX	-	-	-	-	-	-	-	4 CORE CABLE 80A RATED
28/22	BOOSTER STARTER	CC BOOSTER PANEL	-	-	-	-	-	-	-	10 CORE CABLE 1.5mm SQ
70/71	WATER TRAP	BPR	-3.5 BAR	316 SS	SUPPLIED	-	316 SS	SUPPLIED	-	-
61/78	SAECO SUPPLY TEE	BUFFER SUPPLY TEE	21 BAR	316 SS	SUPPLIED	-	316 SS	SUPPLIED	-	-
38/40	HE 02 STANDBY	EXISTING BELL PANEL	200 BAR	-	-	-	-	-	-	-
39/40	HE 02 STANDBY	EXISTING BELL PANEL	200 BAR	-	-	-	-	-	-	-
42/4	BPR LOADER TEE	REPROCESSING UNIT	68 BAR	316 SS	1/4" OD x .028 WALL	310 BAR	TUNGUM	1/4" OD x .035 WALL	324 BAR	-
23	O2 VENT CC	SUITABLE VENT SYSTEM	ATMOSPHERIC	-	-	-	-	-	-	-

NOTES:

15 DENOTES CHANGES MADE AT THIS REVISION

REV	DESCRIPTION	ECN	BY	DATE	AUTH.
R15	REFER TO ECN	21291	DR	25/07/17	AN
R14	CABLE COLUMN ADDED	18346	MJ	24/07/15	AN
R13	REMOVE HOSE INSTALLATION COLUMN	11870	SJ	20/01/09	RTW
R00	ISSUED FOR MANUFACTURE				

THIRD ANGLE PROJECTION

DO NOT SCALE DRAWING

JFD OWNS THE COPYRIGHT OF THIS DOCUMENT AND ANY DESIGN RIGHT HEREIN. IT IS SUPPLIED IN CONFIDENCE AND MUST NOT BE USED FOR ANY PURPOSE OTHER THAN THAT FOR WHICH IT IS SUPPLIED AND MUST NOT BE REPRODUCED WITHOUT PERMISSION IN WRITING FROM THE OWNERS.

TITLE: SCHEMATIC, INTERCONNECTING, ELECTRIC GASMIZER

DRAWING NO. P180581640S2 | REV R15

PART NO. N/A | PRODUCT / PROJECT No. GASMIZER

SIZE A2 | SCALE (UOS) NTS | SHEET 2 OF 2

JFD WESTHILL
ENTERPRISE DRIVE,
WESTHILL, ABERDEEN,
AB32 6TQ, UK

TEL: +44 (0)1224 740145
E: enquiries@jfdglobal.com
W: jfdglobal.com

Schematic, Electric Gasmizer P180581595S1

ITEM NO.	DESCRIPTION	DETAILED SCHEMATIC	PART NO.
1	BELL EQUIPMENT	81496S1	B1496A
2	REPROCESSING UNIT (L.P.)	P180524S1	B15730
3	GAS BOOSTER	B10510101	B1051AA
4	REPROCESSING UNIT (H.P.)	P180525S1	B15730
5	BOOSTER PANEL (C.C.)	N/A	B1571
6	OXYGEN PANEL (C.C.)	B81175S1	B1571
7	CONTROL PANEL (C.C.)	B81174S1	B1571
8	MAKE UP PANEL (C.C.)	B81229S1	B1571
9	VOLUME TANK (10 BOTTLE PACK)	P1805265S1	GR2297AA

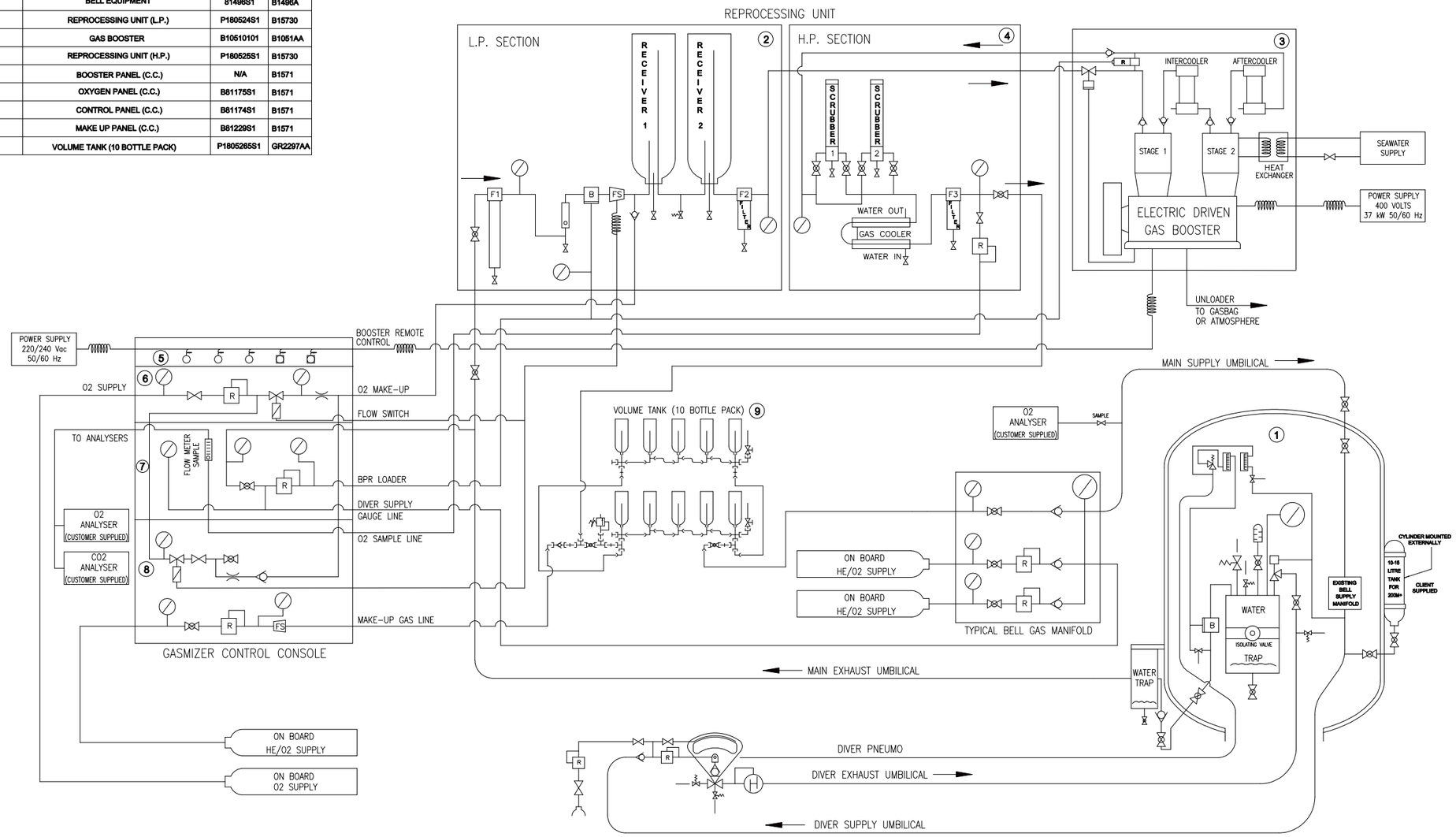

DIVEX OWNS THE COPYRIGHT OF THIS DOCUMENT AND ANY DESIGN RIGHT HEREIN. IT IS SUPPLIED IN CONFIDENCE AND MUST NOT BE USED FOR ANY PURPOSE OTHER THAN THAT FOR WHICH IT IS SUPPLIED AND MUST NOT BE REPRODUCED WITHOUT PERMISSION IN WRITING FROM THE OWNERS.

NOTES

ALL DIMENSIONS SHOWN ARE IN MM (UOS)
ALL DIMENSIONS BEFORE PLATING (UOS)
REMOVE ALL SHARP EDGES AND BURRS

DIMENSIONAL TOLERANCES

MACHINING		FABRICATION	
NO DECIMAL PLACES	±1.0	SIZE >0 <100	±0.5
ONE DECIMAL PLACE	±0.2	SIZE >100 <500	±1.5
TWO DECIMAL PLACE	±0.05	SIZE >500	±3.0
ANGULAR TOLERANCE	±0.5°	ANGULAR TOLERANCE	±0.5°

MATERIAL: N/A

FINISH: N/A

THIRD ANGLE PROJECTION

REV	DESCRIPTION	ECN No	BY	DATE	AUTH. BY
R14	ELECTRICAL INFO. ADDED	11879	LS	19/01/2009	JM
R13	BALL VALVE REMOVED	11053	GR	31/07/2008	JM
R12	O2 ANALYSERS TO BE CUSTOMER SUPPLIED	10555	SJ	02/05/2008	RTW
R11	DETAILD SCHEMATICS FOR EACH SECTION REFERENCES	10417	SJ	10/04/2008	RTW
R10	O2 ORIFICES IDENTIFIED	7052	GC	25/07/2007	RTW
R09	UPDATED TO REFLECT CURRENT PRACTICE	7034	GC	18/07/2007	RTW
R00	ISSUED FOR MANUFACTURE		EB	02/02/1984	TW

DO NOT SCALE DRAWING

TITLE: SCHEMATIC, ELECTRIC GASMIZER

PRODUCT / PROJECT No.: GASMIZER

PART No.: -

DRAWING No.: P180581595S1

SIZE: A1 | SCALE: N.T.S. | SHT 1 OF 1 | REV R14

DIVEX
DIVEX LIMITED
ENTERPRISE DRIVE
WESTHILL
ABERDEEN
AB32 6TQ
UNITED KINGDOM
Tel : +44(0)1224 740145
Fax : +44(0)1224 740172
email : info@divexglobal.com
www.divexglobal.com

Booster Interface Information IFD1001006S1

CONNECTIONS		
I.D.	DESCRIPTION	CONNECTION
A	GAS INLET	3/4" (F) NPT
B	GAS OUTLET	1/2" (F) NPT
C	BPR CONNECTION	1/4" (F) NPT
D	UNLOADER	3/4" (F) NPT
E	COOLING WATER INLET	G1 - 1/4"
F	COOLING WATER OUTLET	G1 - 1/4"
G	440V 3PH SUPPLY & INSTRUMENT CABLE	GLAND(S)
2 H	EARTH STUD	M10x40

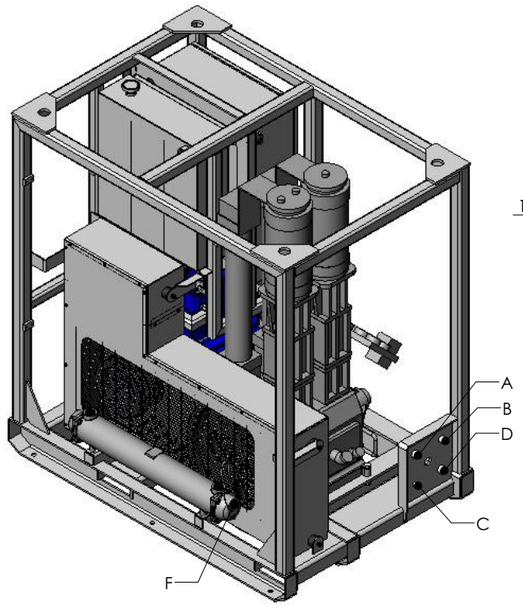

ISOMETRIC VIEW

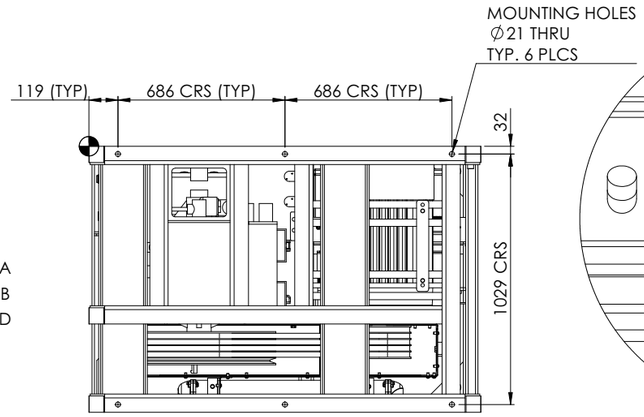

VIEW ON ARROW 'Z'

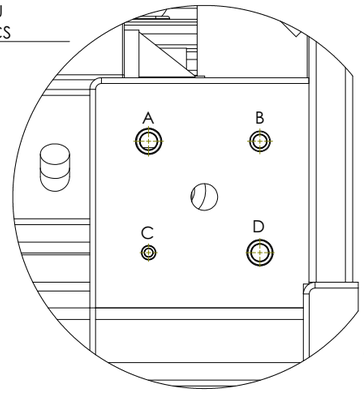

CONNECTION PLATE DETAIL
SCALE 1 : 5

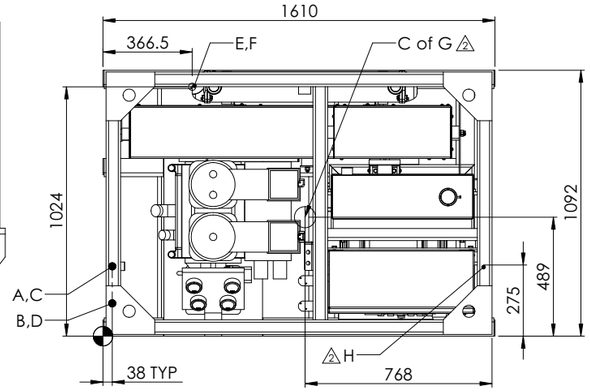

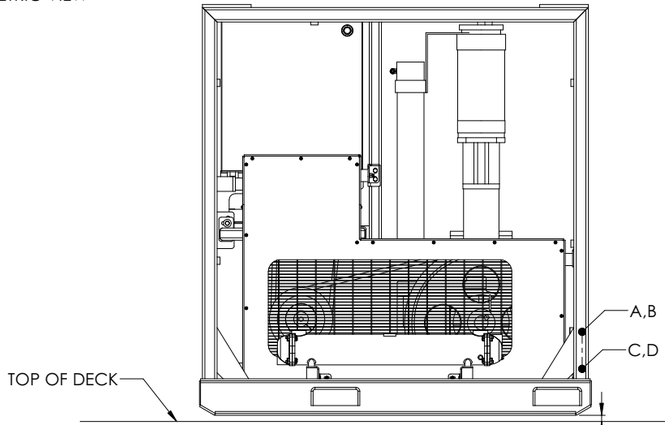

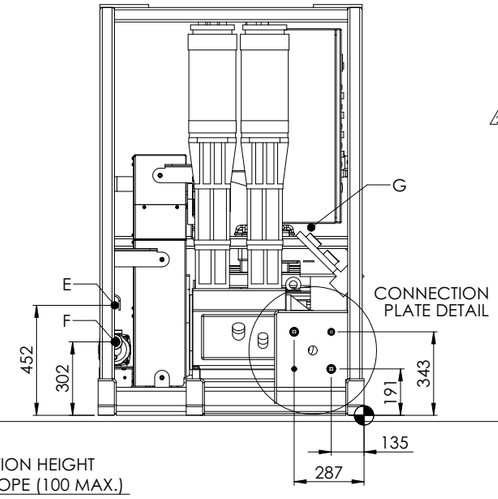

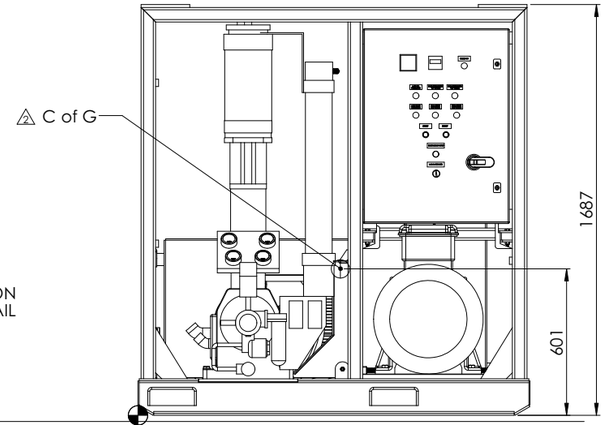

FOUNDATION HEIGHT
SHIPYARD SCOPE (100 MAX.)

Z

EQUIPMENT POSITION DATUM

DIVEX OWNS THE COPYRIGHT OF THIS DOCUMENT AND ANY DESIGN RIGHT HEREIN. IT IS SUPPLIED IN CONFIDENCE AND MUST NOT BE USED FOR ANY PURPOSE OTHER THAN THAT FOR WHICH IT IS SUPPLIED AND MUST NOT BE REPRODUCED WITHOUT PERMISSION IN WRITING FROM THE OWNERS.

NOTES
1. ALL CONNECTIONS ± 0.25m
2. TUBE IS SIZED BY OUTER DIAMETER AND WALL THICKNESS. METRIC PIPE IS SIZED B NOMINAL DIAMETER IS 6708 WITH PREFIX DN.

LEGEND
- COG CENTRE OF GRAVITY
- EQUIPMENT DATUM
- CONNECTION POINT
- 2 - DENOTES CHANGES MADE AT THIS REVISION.

ALL DIMENSIONS SHOWN ARE IN MM (UOS)
ALL DIMENSIONS BEFORE PLATING (UOS)
REMOVE ALL SHARP EDGES AND BURRS

DIMENSIONAL TOLERANCES

MACHINING		FABRICATION	
NO DECIMAL PLACES	±1.0	SIZE >0 <100	±0.5
ONE DECIMAL PLACE	±0.2	SIZE >100 <500	±1.5
TWO DECIMAL PLACE	±0.05	SIZE >500	±3.0
ANGULAR TOLERANCE	±0.5°	ANGULAR TOLERANCE	±0.5°

MATERIAL: N/A
FINISH: N/A
THIRD ANGLE PROJECTION

REV	DESCRIPTION	ECN No	BY	DATE	AUTH.BY
R06					
R05					
R04					
R03					
R02	EARTH POINT & CENTRE OF GRAVITY ADDED	15408	DW	19/12/2012	JH
R01	STARTER PANEL UPDATED	14996	ZD	04/09/2012	SC
R00	ISSUED FOR MANUFACTURE		AC	05/10/2007	MR

DO NOT SCALE DRAWING

TITLE: **BOOSTER INTERFACE INFORMATION**

DRAWING No. IFD1001006S1 | REV R02
PART No. N/A | PRODUCT / PROJECT No. IFD100
SIZE A2 | SCALE 1:15 | SHT 1 OF 1

DIVEX
DIVEX LIMITED
ENTERPRISE DRIVE
WESTHILL
ABERDEEN
AB32 6TQ
UNITED KINGDOM
Tel : +44(0)1224 740145
Fax : +44(0)1224 740172
email : info@divexglobal.com
www.divexglobal.com

Gasmizer HP Reprocessing Unit IFD1001003S1

CONNECTIONS		
I.D.	DESCRIPTION	CONNECTION
A	CONNECTION FROM BOOSTER	16-JIC
B	CONNECTION TO VOLUME TANK	16-JIC
C	CONNECTION TO CONTROL CONSOLE SAMPLE	4-JIC
D	COOLING WATER INLET	1" (F) NPT
E	COOLING WATER OUTLET	1" (F) NPT
F	EARTH STUD	M8 x 40

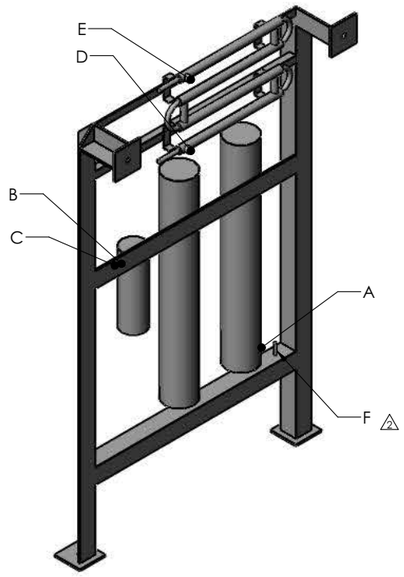

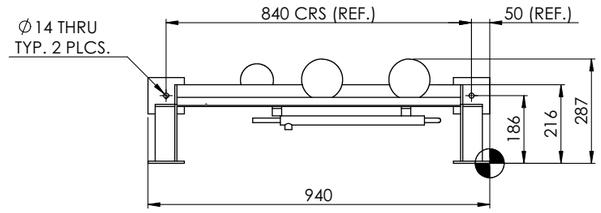

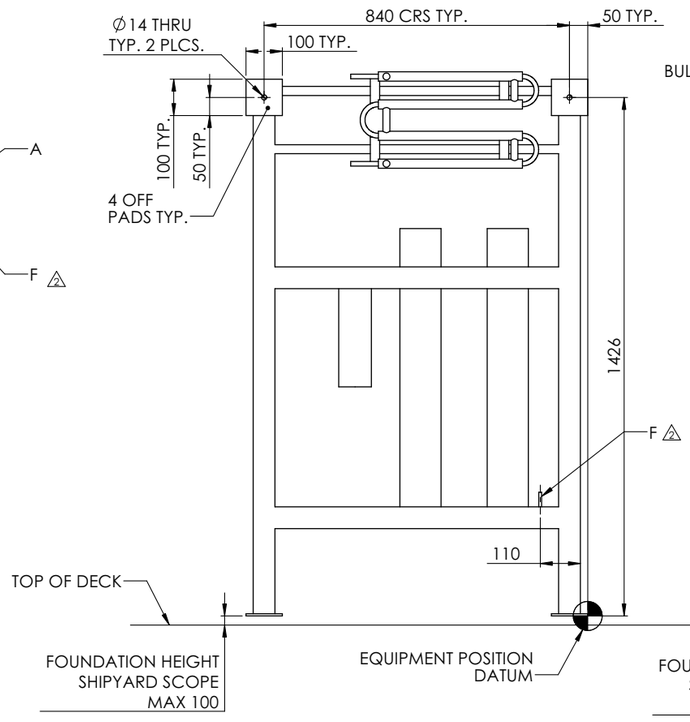

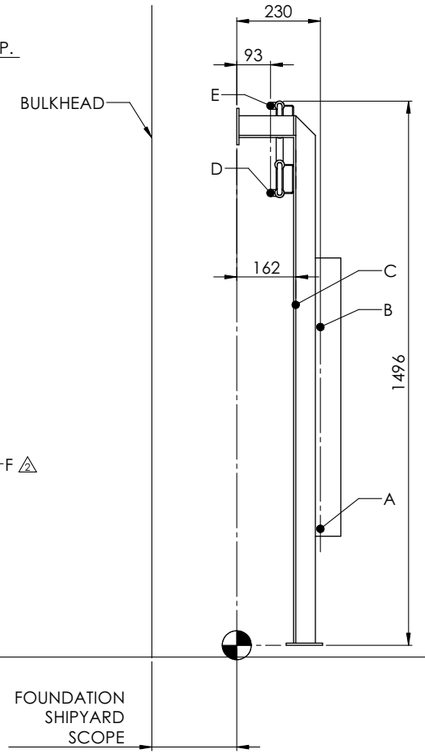

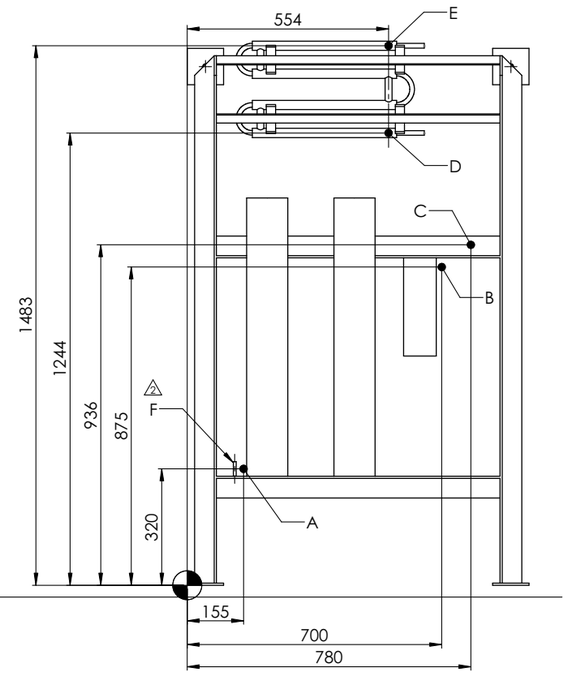

DIVEX OWNS THE COPYRIGHT OF THIS DOCUMENT AND ANY DESIGN RIGHT HEREIN. IT IS SUPPLIED IN CONFIDENCE AND MUST NOT BE USED FOR ANY PURPOSE OTHER THAN THAT FOR WHICH IT IS SUPPLIED AND MUST NOT BE REPRODUCED WITHOUT PERMISSION IN WRITING FROM THE OWNERS.

NOTES

1. ALL CONNECTIONS ± 0.25m
2. TUBE IS SIZED BY OUTER DIAMETER AND WALL THICKNESS. METRIC PIPE IS SIZED BY NOMINAL DIAMETER ISO 6708 WITH PREFIX DN.

LEGEND

- EQUIPMENT DATUM
- CONNECTION POINT

ALL DIMENSIONS SHOWN ARE IN MM (UOS)
ALL DIMENSIONS BEFORE PLATING (UOS)
REMOVE ALL SHARP EDGES AND BURRS

DIMENSIONAL TOLERANCES

MACHINING		FABRICATION	
NO DECIMAL PLACES	±1.0	SIZE >0 <100	±0.5
ONE DECIMAL PLACE	±0.2	SIZE >100 <500	±1.5
TWO DECIMAL PLACE	±0.05	SIZE >500	±3.0
ANGULAR TOLERANCE	±0.5°	ANGULAR TOLERANCE	±0.5°

MATERIAL: N/A

FINISH: N/A

THIRD ANGLE PROJECTION

REV	DESCRIPTION	ECN No	BY	DATE	AUTH.BY
R06					
R05					
R04					
R03					
R02	EARTH POINT ADDED	15393	DW	10/12/12	JH
R01	TABLE UPDATED, NEW BORDER ADDED	10455	JM	15/04/08	JM
R00	RELEASED FOR CONSTRUCTION		AC	15/10/17	AC

DO NOT SCALE DRAWING

TITLE: **GASMIZER HP REPROCESSING UNIT**

DRAWING No.: **IFD1001003S1** REV: **R02**

PART No.:

PRODUCT / PROJECT No.: IFD100

SIZE: A2 SCALE: 1:10 SHT 1 OF 1

DIVEX
DIVEX LIMITED
ENTERPRISE DRIVE
WESTHILL
ABERDEEN
AB32 6TQ
UNITED KINGDOM
Tel : +44(0)1224 740145
Fax : +44(0)1224 740172
email : info@divexglobal.com
www.divexglobal.com

Gasmizer HP Reprocessing Unit IFD1001004S1

CONNECTIONS		
I.D.	DESCRIPTION	CONNECTION
A	GAS INLET	16-JIC
B	BPR CONNECTION	4-JIC
C	O_2 MAKE UP INLET	4-JIC
D	OUTLET TO BOOSTER	16-JIC
E	EARTH STUD	M8 x 40

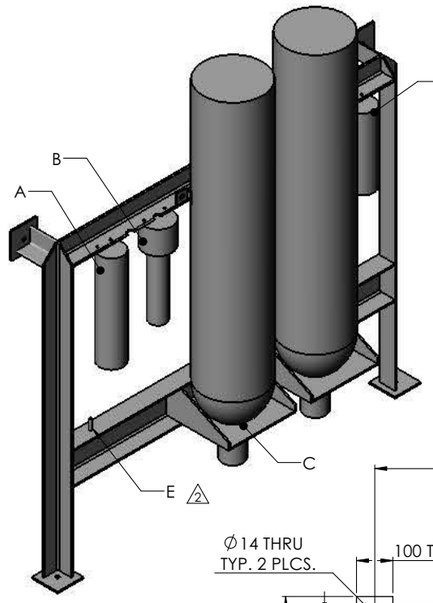

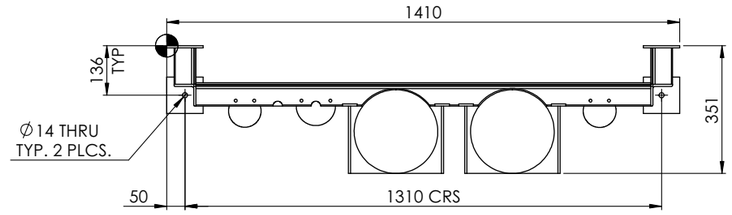

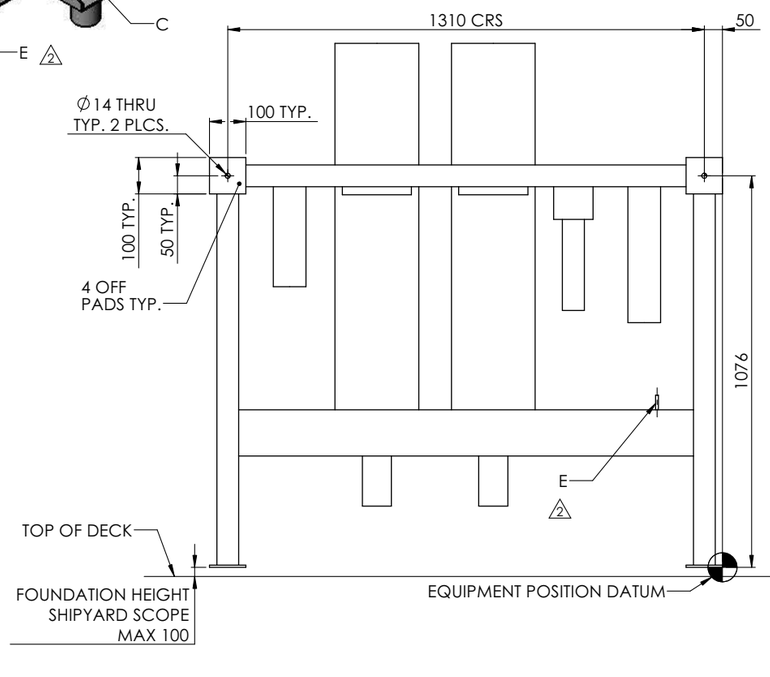

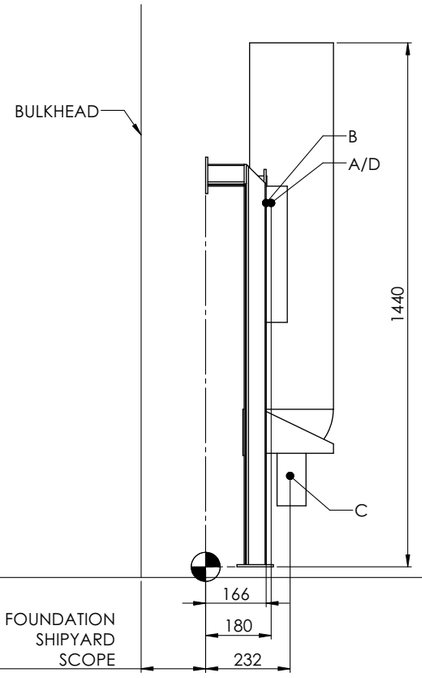

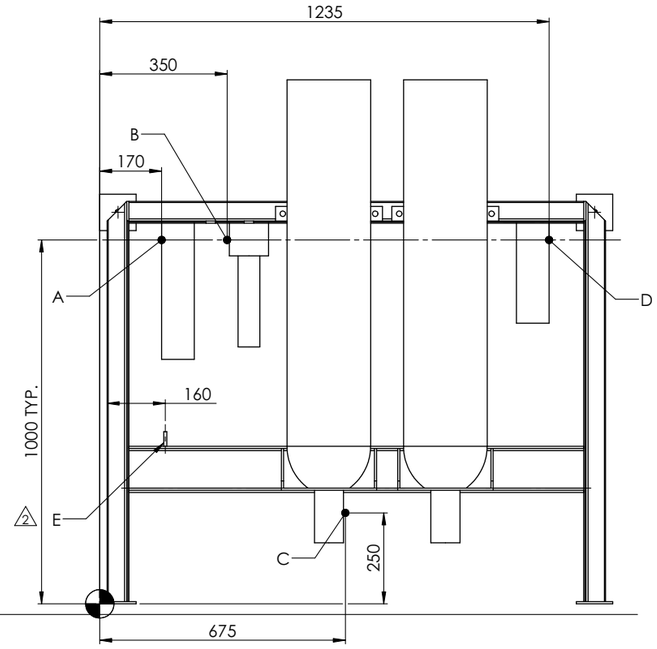

DIVEX OWNS THE COPYRIGHT OF THIS DOCUMENT AND ANY DESIGN RIGHT HEREIN. IT IS SUPPLIED IN CONFIDENCE AND MUST NOT BE USED FOR ANY PURPOSE OTHER THAN THAT FOR WHICH IT IS SUPPLIED AND MUST NOT BE REPRODUCED WITHOUT PERMISSION IN WRITING FROM THE OWNERS.

NOTES
1. ALL CONNECTIONS ± 0.25m
2. TUBE IS SIZED BY OUTER DIAMETER AND WALL THICKNESS. METRIC PIPE IS SIZED BY NOMINAL DIAMETER ISO 6708 WITH PREFIX DN.

LEGEND
- EQUIPMENT DATUM
- CONNECTION POINT

ALL DIMENSIONS SHOWN ARE IN MM (UOS)
ALL DIMENSIONS BEFORE PLATING (UOS)
REMOVE ALL SHARP EDGES AND BURRS

DIMENSIONAL TOLERANCES

MACHINING		FABRICATION	
NO DECIMAL PLACES	±1.0	SIZE >0 <100	±0.5
ONE DECIMAL PLACE	±0.2	SIZE >100 <500	±1.5
TWO DECIMAL PLACE	±0.05	SIZE >500	±3.0
ANGULAR TOLERANCE	±0.5°	ANGULAR TOLERANCE	±0.5°

MATERIAL: N/A
FINISH: N/A
THIRD ANGLE PROJECTION

REV	DESCRIPTION	ECN No	BY	DATE	AUTH.BY
R06					
R05					
R04					
R03					
R02	EARTH POINT ADDED	15393	DW	13/12/12	JH
R01	TABLE UPDATED, NEW BORDER ADDED	10455	JM	15/04/08	JM
R00	RELEASED FOR CONSTRUCTION		JM	15/10/07	JM

DO NOT SCALE DRAWING

TITLE: **GASMIZER LP REPROCESSING UNIT**

DRAWING No. **IFD1001004S1** REV **R02**
PART No.
PRODUCT / PROJECT No. IFD100
SIZE A2 SCALE 1:10 SHT 1 OF 1

DIVEX
DIVEX LIMITED
ENTERPRISE DRIVE
WESTHILL
ABERDEEN
AB32 6TQ
UNITED KINGDOM
Tel : +44(0)1224 740145
Fax : +44(0)1224 740172
email : info@divexglobal.com
www.divexglobal.com

Tank, Volume, Gasmizer, Interface Information IFD1001007S1

CONNECTIONS		
I.D.	DESCRIPTION	CONNECTION
A	GAS INLET	16-JIC
B	GAS OUTLET	16-JIC
C	MAKE UP INLET	16-JIC
D	LOCAL DRAIN	N/A
E	OVERBOARD VENT	10-JIC
F	EARTH STUD	M8 x 40

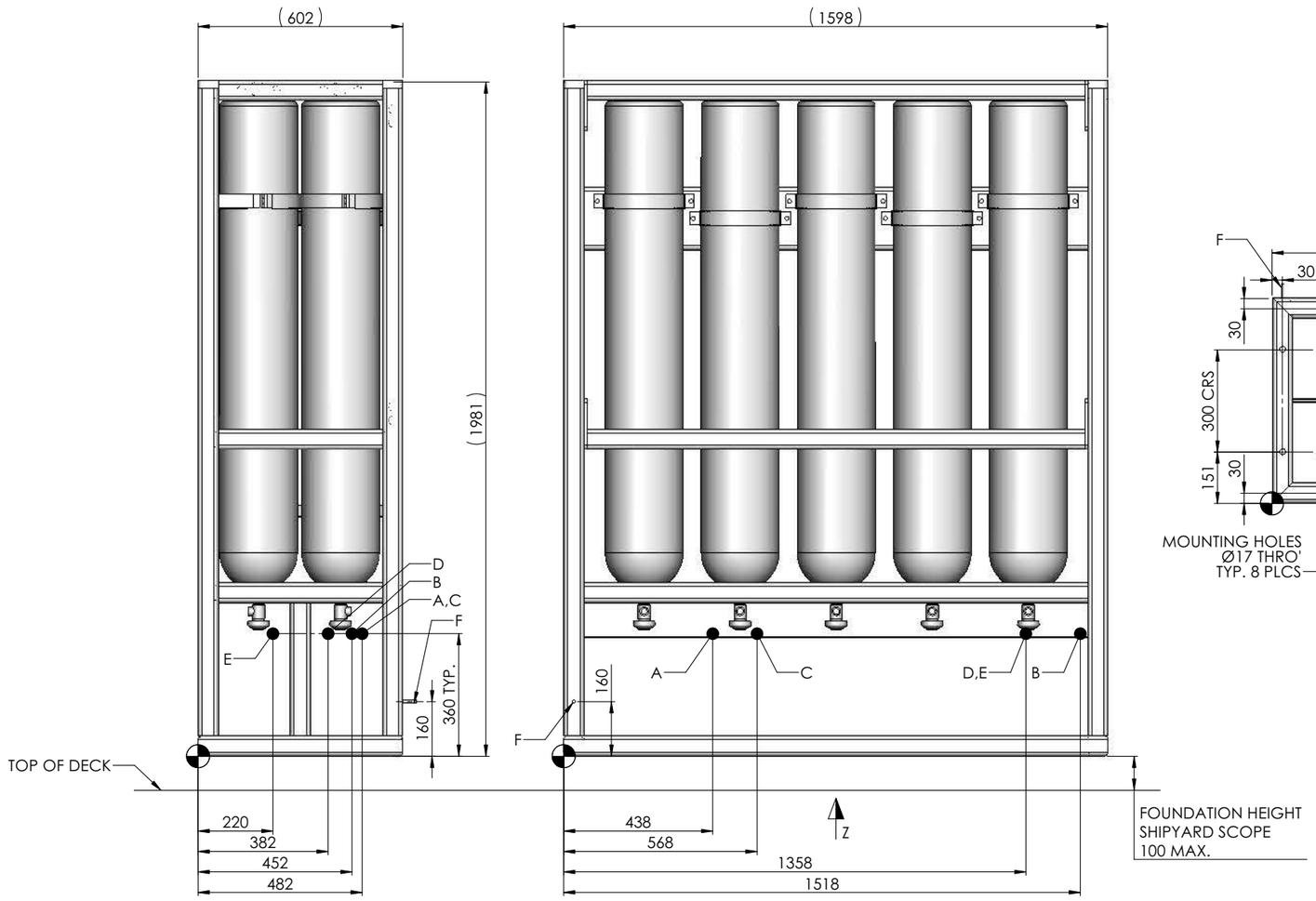

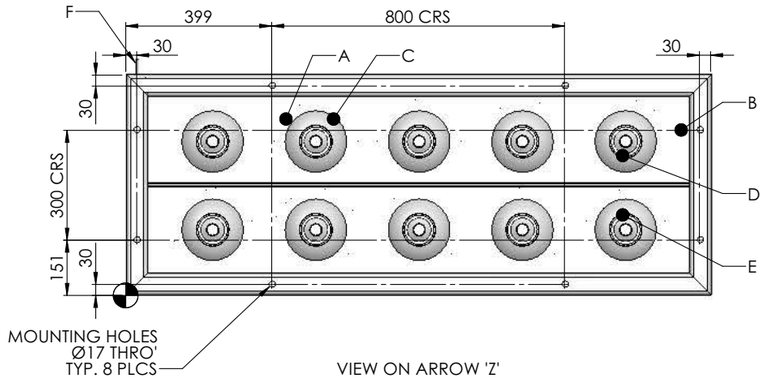

DIVEX OWNS THE COPYRIGHT OF THIS DOCUMENT AND ANY DESIGN RIGHT HEREIN. IT IS SUPPLIED IN CONFIDENCE AND MUST NOT BE USED FOR ANY PURPOSE OTHER THAN THAT FOR WHICH IT IS SUPPLIED AND MUST NOT BE REPRODUCED WITHOUT PERMISSION IN WRITING FROM THE OWNERS.

NOTES
1. ALL CONNECTIONS ± 0.25m
2. TUBE IS SIZED BY OUTER DIAMETER AND WALL THICKNESS. METRIC PIPE IS SIZED BY NOMINAL DIAMETER ISO 6708 WITH PREFIX DN.
3. MASS 800KG

LEGEND
EQUIPMENT DATUM
CONNECTION POINT

ALL DIMENSIONS SHOWN ARE IN MM (UOS)
ALL DIMENSIONS BEFORE PLATING (UOS)
REMOVE ALL SHARP EDGES AND BURRS

DIMENSIONAL TOLERANCES

MACHINING		FABRICATION	
NO DECIMAL PLACES	±1.0	SIZE >0 <100	±0.5
ONE DECIMAL PLACE	±0.2	SIZE >100 <500	±1.5
TWO DECIMAL PLACE	±0.05	SIZE >500	±3.0
ANGULAR TOLERANCE	±0.5°	ANGULAR TOLERANCE	±0.5°

MATERIAL: N/A
FINISH: N/A
THIRD ANGLE PROJECTION

REV	DESCRIPTION	ECN No	BY	DATE	AUTH.BY
R06					
R05					
R04					
R03					
R02	EARTH POINT ADDED	15393	DW	10/12/12	JH
R01	RELEASED FOR INFORMATION	10274	AC	21/03/08	AC
R00	RELEASED FOR INFORMATION		AC	20/12/07	AC

DO NOT SCALE DRAWING

TITLE: **TANK, VOLUME, GASMIZER, INTERFACE INFORMATION**

DRAWING No. IFD1001007S1 REV R02
PART No. GR2297AA PRODUCT / PROJECT No. IFD100
SIZE A2 SCALE 1:10 SHT 1 OF 1

DIVEX
DIVEX LIMITED
ENTERPRISE DRIVE
WESTHILL
ABERDEEN
AB32 6TQ
UNITED KINGDOM
Tel : +44(0)1224 740145
Fax : +44(0)1224 740172
email : info@divexglobal.com
www.divexglobal.com

Control Console, Electric Gasmizer B81571

Sheet 1 of 2

ITEM NO.	PART No.	DESCRIPTION	QTY.
1	DM596A	FRAME, CONTROL CONSOLE, GASMIZER	1
2	P254	FASCIA,ELECTRIC GASMIZER CONTROL CONSOLE	1
3	P259B	PLATE, PENETRATOR, CONTROL CONSOLE, 19"	1
4	P5972	PANEL,TOP,CONTROL CONSOLE	1
5	P5971	PANEL,SIDE,EXTD.	2
6	FB012	SCREW, 1/4" UNC X 1/2" LG, BUTTON HEAD SLOTTED	38
7	FW019	WASHER,PLAIN, NYLON 9/16"ODX1/4"IDX1/16"THK	38
8	FB018	Screw, Pan Hd, 10UNC x 3/8" Lg	4
9	FN012	NUT,HEX, 10-24,316 SS	4
10	FW012	WASHER, PLAIN, 10UNC	4
11	C1272	LABEL SET, ENGRAVED, GASMIZER CONTROL CONSOLE	1
12	P256	FASCIA, BOOSTER, CONTROL CONSOLE	1

13

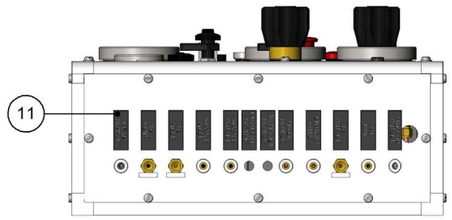

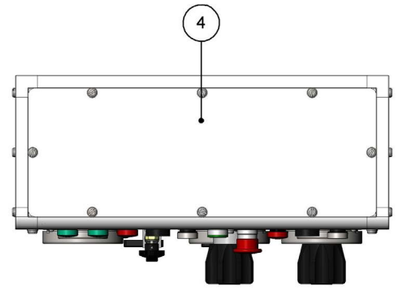

PLAN

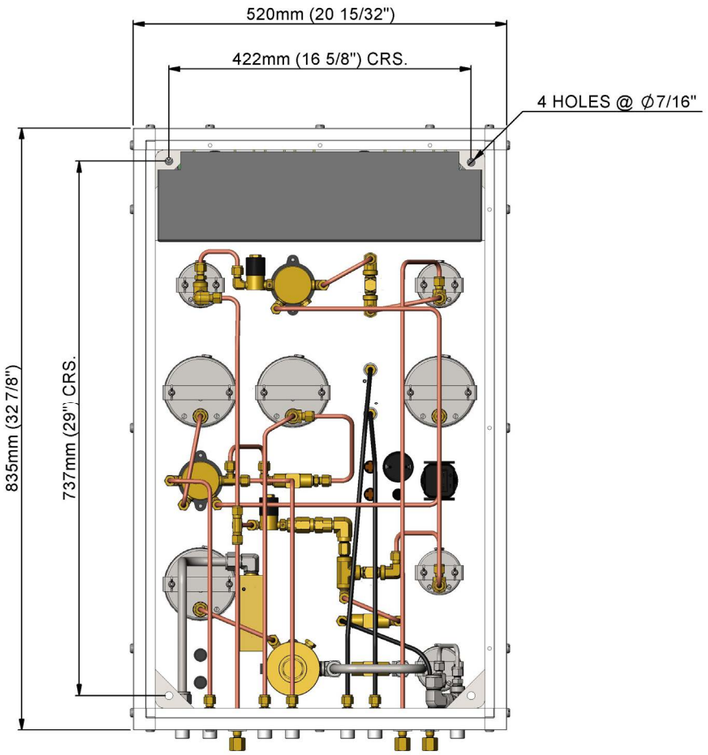

REAR VIEW

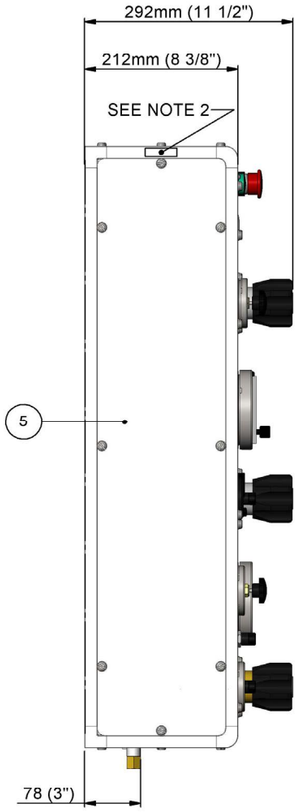

END ELEVATION

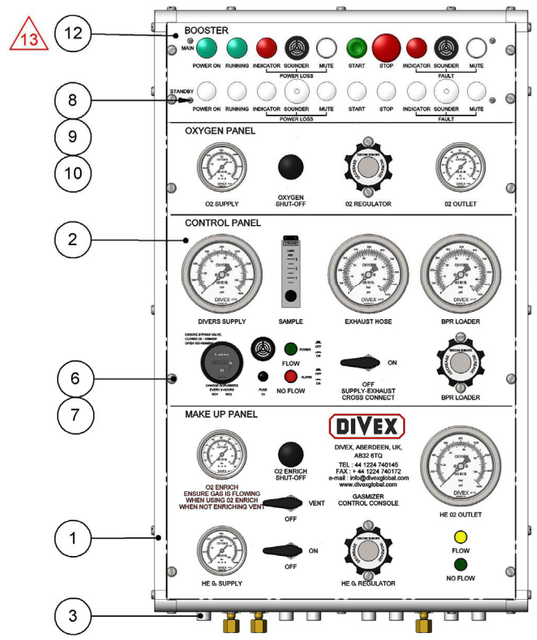

ELEVATION

DIVEX OWNS THE COPYRIGHT OF THIS DOCUMENT AND ANY DESIGN RIGHT HEREIN. IT IS SUPPLIED IN CONFIDENCE AND MUST NOT BE USED FOR ANY PURPOSE OTHER THAN THAT FOR WHICH IT IS SUPPLIED AND MUST NOT BE REPRODUCED WITHOUT PERMISSION IN WRITING FROM THE OWNERS.

NOTES

1. WEIGHT : 23kg (50lbs)
2. SERIAL NO. TO BE HARD STAMPED IN POSITION INDICATED. FORMAT TO BE "XXXXXWXSX"
3. ALL GAS CONNECTIONS 1/4" (No. 4) JIC MALE.

13 - DENOTES CHANGES MADE AT THIS REVISION.

ALL DIMENSIONS SHOWN ARE IN MM (UOS)
ALL DIMENSIONS BEFORE PLATING (UOS)
REMOVE ALL SHARP EDGES AND BURRS

DIMENSIONAL TOLERANCES

MACHINING		FABRICATION	
NO DECIMAL PLACES	±1.0	SIZE >0 <100	±0.5
ONE DECIMAL PLACE	±0.2	SIZE >100 <500	±1.5
TWO DECIMAL PLACE	±0.05	SIZE >500	±3.0
ANGULAR TOLERANCE	±0.5°	ANGULAR TOLERANCE	±0.5°

MATERIAL: SEE PARTS LIST

FINISH: N/A

THIRD ANGLE PROJECTION

REV	DESCRIPTION	ECN No	BY	DATE	AUTH.BY
R13	PART No. P256 ADDED	15022	ZD	06/09/2012	MS
R12	INTERFACE INFORMATION ADDED	13121	SJ	03/03/2010	RTW
R11	REFER TO SHEET 2	12880	GR	24/09/2009	RTW
R10	UPDATED TO SHOW NEW LAYOUT	12602	GC	30/06/2009	RTW
R09	PART No. AND "ELECTRIC" REMOVED FROM FASCIA	7144	GC	07/11/2007	RTW
R08	REDRAWN TO SOLIDWORKS	8999	MM	17/07/2007	RTW
R00	ISSUED FOR MANUFACTURE		MB	06/02/1991	GSH

DO NOT SCALE DRAWING

TITLE: **CONTROL CONSOLE, ELECTRIC GASMIZER**

DRAWING No. B81571S1 | REV R13

PART No. B1571 | PRODUCT / PROJECT No. GASMIZER

SIZE A2 | SCALE 1:5 | SHT 1 OF 2

DIVEX
DIVEX LIMITED
ENTERPRISE DRIVE
WESTHILL
ABERDEEN
AB32 6TQ
UNITED KINGDOM
Tel : +44(0)1224 740145
Fax : +44(0)1224 740172
email : info@divexglobal.com
www.divexglobal.com

Sheet 2 of 2

CONNECTION	SIZE
He O2 SUPPLY	1/4" NPT
O2 VENT	1/4" NPT
O2 INLET	1/4" NPT
SAMPLE INLET	1/4" NPT
SAMPLE OUTLET	1/4" NPT
FROM FLOW SWITCH	Ø13.5
TO POWER SUPPLY	Ø13.5
DIVER SUPPLY	1/4" NPT
EXHAUST HOSE	1/4" NPT
O2 OUTLET	1/4" NPT
TO BPR	1/4" NPT
MAKE UP OUTLET	1/4" NPT

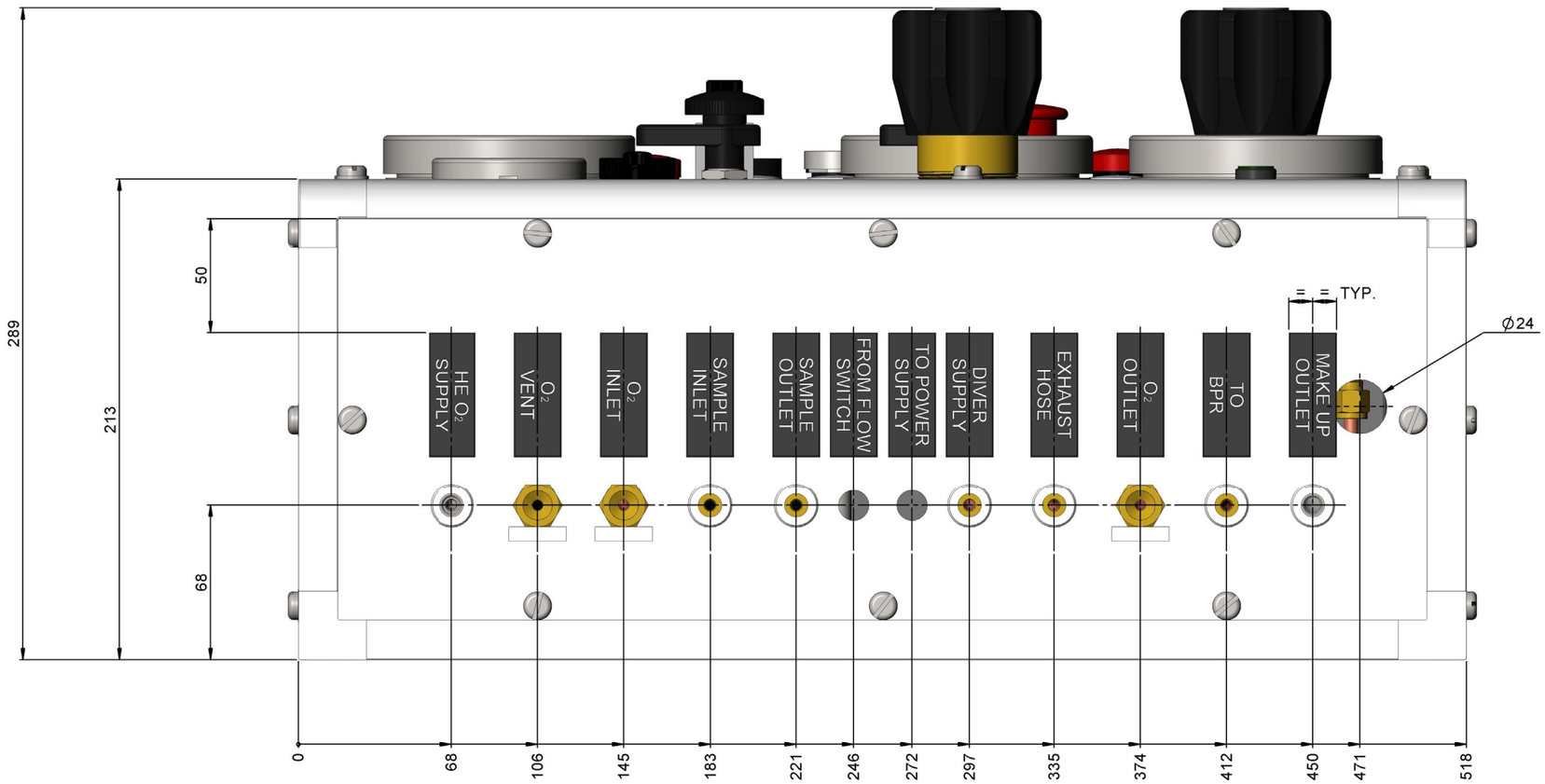

DIVEX OWNS THE COPYRIGHT OF THIS DOCUMENT AND ANY DESIGN RIGHT HEREIN. IT IS SUPPLIED IN CONFIDENCE AND MUST NOT BE USED FOR ANY PURPOSE OTHER THAN THAT FOR WHICH IT IS SUPPLIED AND MUST NOT BE REPRODUCED WITHOUT PERMISSION IN WRITING FROM THE OWNERS.

NOTES

ALL DIMENSIONS SHOWN ARE IN MM (UOS)
ALL DIMENSIONS BEFORE PLATING (UOS)
REMOVE ALL SHARP EDGES AND BURRS

DIMENSIONAL TOLERANCES

MACHINING		FABRICATION	
NO DECIMAL PLACES	±1.0	SIZE >0 <100	±0.5
ONE DECIMAL PLACE	±0.2	SIZE >100 <500	±1.5
TWO DECIMAL PLACE	±0.05	SIZE >500	±3.0
ANGULAR TOLERANCE	±0.5°	ANGULAR TOLERANCE	±0.5°

MATERIAL: SEE SHEET 1

FINISH: N/A

THIRD ANGLE PROJECTION

REV	DESCRIPTION	ECN No	BY	DATE	AUTH.BY
R06	SEE SHEET 1	15022	ZD	06/09/2012	MS
R05	SEE SHEET 1	13121	SJ	03/03/2010	GMcC
R04	OVERALL DIMENSIONS ADDED. CONNECTION LOCATION DIMENSIONS ADDED. CONNECTION SIZE TABLE ADDED.	12880	GR	24/09/2009	RTW
R03	UPDATED TO SHOW NEW LAYOUT	12602	GC	07/07/2009	RTW
R02	PART No. AND "ELEC~RIC" REMOVED FROM FASCIA	7144	GC	07/11/2007	RTW
R01	REDRAWN TO SOLIDWORKS	8999	MM	17/07/2007	RTW
R00	ISSUED FOR MANUFACTURE		MB	06/02/1991	GSH

DO NOT SCALE DRAWING

TITLE: **CONTROL CONSOLE, ELECTRIC GASMIZER**

DRAWING No.: **B81571S2** FEV: **R13**

PART No.: B1571 PRODUCT / PROJECT No.: GASMIZER

SIZE: A2 SCALE: 1:1.5 SHT 2 OF 2

DIVEX
DIVEX LIMITED
ENTERPRISE DRIVE
WESTHILL
ABERDEEN
AB32 6TQ
UNITED KINGDOM
Tel : +44(0)1224 740145
Fax : +44(0)1224 740172
email : info@divexglobal.com
www.divexglobal.com

Control Console, Gasmizer Electric, 19” Rack Mount GA1009018S1

CONNECTIONS

I.D.	DESCRIPTION	FITTING
C20	HE O2 SUPPLY	1/4" NPT (F) COUPLING, 316 S/S
C23	02 VENT	M12 NYLON GLAND
C21	O2 INLET	1/4" BULKHEAD CONNECTOR, BRASS
C19	SAMPLE INLET	1/4" NPT (F) COUPLING, 316 S/S
C15	SAMPLE OUTLET	1/4" NPT (F) COUPLING, 316 S/S
C14	FROM FLOW SWITCH	ELECTRICAL CONNECTION INTERFACE
C18	TO POWER SUPPLY	ELECTRICAL CONNECTION INTERFACE
C17	DIVER SUPPLY	1/4" NPT (F) COUPLING, 316 S/S
C16	EXHAUST HOSE	1/4" NPT (F) COUPLING, 316 S/S
C13	O2 OUTLET	1/4" BULKHEAD CONNECTOR, BRASS
C12	TO BPR	1/4" NPT (F) COUPLING, 316 S/S
C11	MAKE UP OUTLET	1/4" NPT (F) COUPLING, 316 S/S

CONNECTION POINT COORDINATES

I.D.	X	Y	Z
C20	51	48	251
C23	89	48	235
C21	121	48	265
C19	165	48	251
C15	203	48	251
C14	229	48	235
C18	254	48	235
C17	280	48	251
C16	318	48	251
C13	349	48	265
C12	394	48	251
C11	432	48	251

UNIT RATINGS

INTERCONNECTIONS REFERENCE DRAWING: P180581640S1&S2

SERVICES

INTERCONNECTIONS REFERENCE DRAWING: P180581640S1&S2

GENERAL/INFORMATION

CONNECTION DIMENSIONS:

± 0.1m

LEGEND:

DATUM

CENTRE OF GRAVITY

NOTES:

DESIGNED TO SUIT 19" RACK (PART NO: CO363393)
ALL DIMENSIONS ARE FOR REFERENCE ONLY

CENTRE OF GRAVITY COORDINATES (APPROX.)

I.D.	X	Y	Z
COG	252	294	54

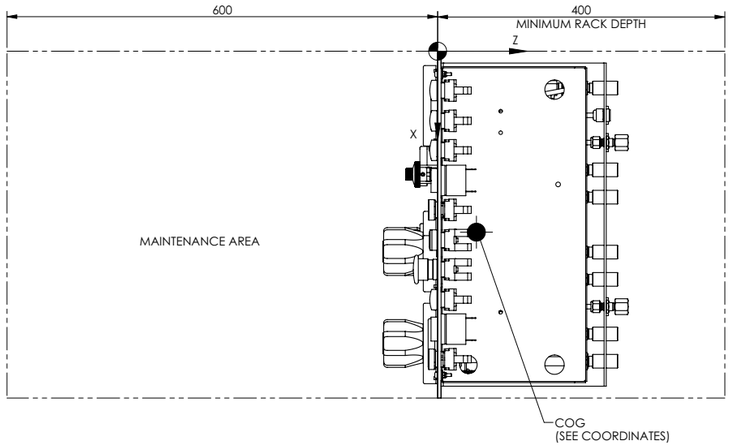

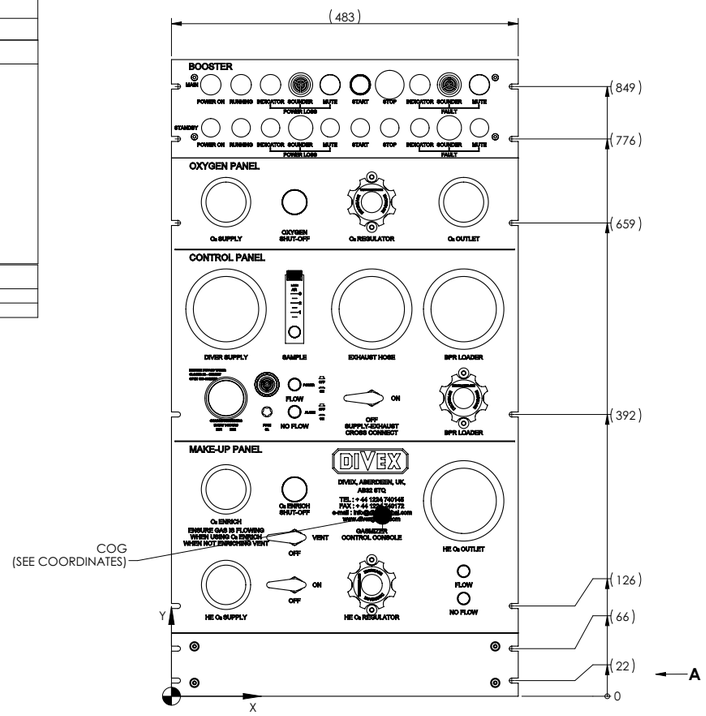

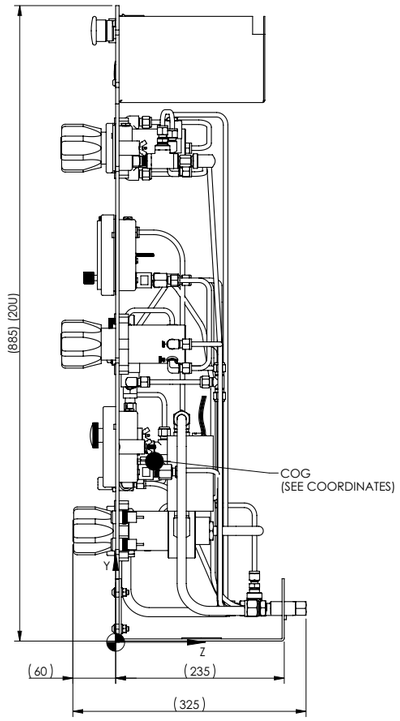

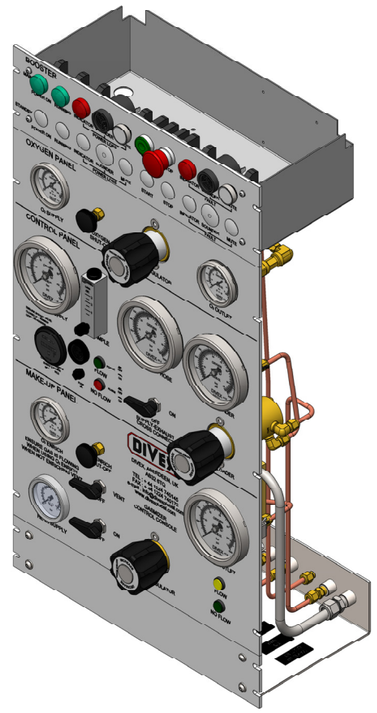

ISOMETRIC VIEW

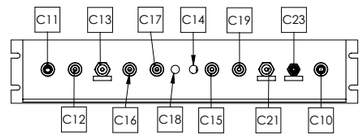

CROPPED VIEW ON A

NOTES:

MATERIAL N/A

FINISH N/A

ALL DIMENSIONS ARE IN mm (UOS)
ALL DIMENSIONS BEFORE PLATING (UOS)
REMOVE ALL SHARP EDGES AND BURRS

MACHINING TOLERANCE		FABRICATION TOLERANCE	
NO DECIMAL PLACE	±1.0	>0 <100	±0.5
ONE DECIMAL PLACE	±0.2	>100 <500	±1.5
TWO DECIMAL PLACE	±0.05	>500	±3.0
ANGULAR TOLERANCE	±0.5°		

DENOTES CHANGES MADE AT THIS REVISION

REV	DESCRIPTION	ECN	BY	DATE	AUTH.
R03					
R02					
R01	SHEET 2 ADDED	19672	MJ	30/06/16	AN
R00	ISSUED FOR MANUFACTURE	X	MJ	05/02/16	PB

THIRD ANGLE PROJECTION

DO NOT SCALE DRAWING

JFD OWNS THE COPYRIGHT OF THIS DOCUMENT AND ANY DESIGN RIGHT HEREIN. IT IS SUPPLIED IN CONFIDENCE AND MUST NOT BE USED FOR ANY PURPOSE OTHER THAN THAT FOR WHICH IT IS SUPPLIED AND MUST NOT BE REPRODUCED WITHOUT PERMISSION IN WRITING FROM THE OWNERS.

TITLE: **CONTROL CONSOLE, GASMIZER ELECTRIC, 19" RACK MOUNT**

DRAWING NO. **GA1009018S1** REV **R01**

PART NO. B1571-RACK

PRODUCT / PROJECT No. GA100

SIZE A2 SCALE (UOS) 1:5 SHEET 1 OF 2

JFD WESTHILL ENTERPRISE DRIVE, WESTHILL, ABERDEEN, AB32 6TQ, UK
TEL: +44 (0)1224 740145
E: enquiries@jfdglobal.com
W: jfdglobal.com

P&ID 2 Diver Bell Equipment, Gasmizer System P1805901S1

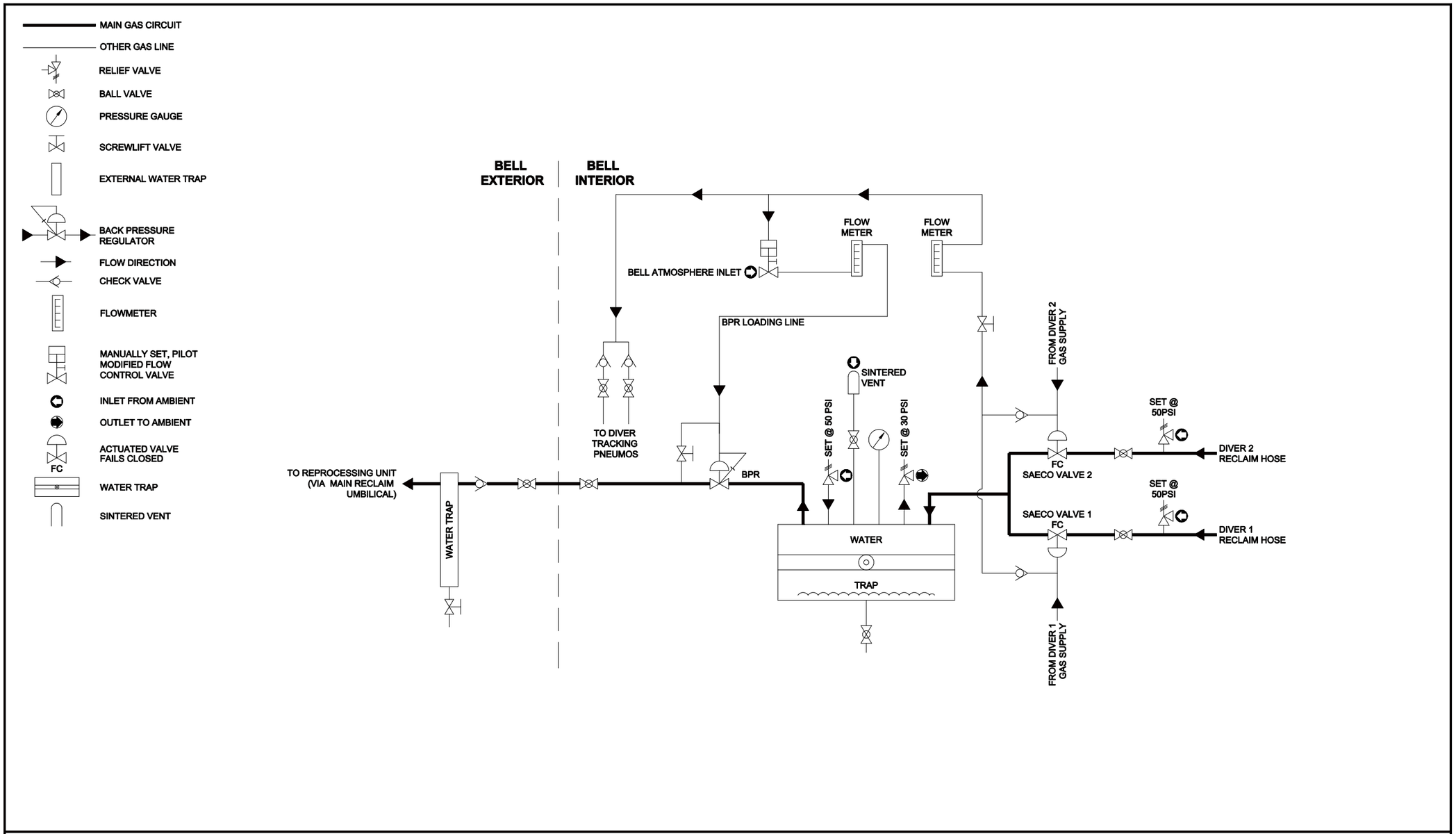

DIVEX OWNS THE COPYRIGHT OF THIS DOCUMENT AND ANY DESIGN RIGHT HEREIN. IT IS SUPPLIED IN CONFIDENCE AND MUST NOT BE USED FOR ANY PURPOSE OTHER THAN THAT FOR WHICH IT IS SUPPLIED AND MUST NOT BE REPRODUCED WITHOUT PERMISSION IN WRITING FROM THE OWNERS.

NOTES:
INPUTS AND OUTPUTS TO UNIT ARE ANNOTATED ASSUMING UNIT IS PART OF A CORRECTLY INSTALLED DIVEX GASMIZER SYSTEM.

ALL DIMENSIONS SHOWN ARE IN MM (UOS)
ALL DIMENSIONS BEFORE PLATING (UOS)
REMOVE ALL SHARP EDGES AND BURRS

DIMENSIONAL TOLERANCES

MACHINING		FABRICATION	
NO DECIMAL PLACES	±1.0	SIZE >0 <100	±0.5
ONE DECIMAL PLACE	±0.2	SIZE >100 <500	±1.5
TWO DECIMAL PLACE	±0.05	SIZE >500	±3.0
ANGULAR TOLERANCE	±0.5°	ANGULAR TOLERANCE	±0.5°

MATERIAL: N/A
FINISH: N/A
THIRD ANGLE PROJECTION

REV	DESCRIPTION	ECN No	BY	DATE	AUTH. BY
R06					
R05					
R04					
R03					
R02					
R01					
R00	ISSUED FOR INFORMATION	X	GC	11/12/2008	RTW

DO NOT SCALE DRAWING

TITLE: PROCESS & INSTRUMENTATION DIAGRAM, 2 DIVER BELL EQUIPMENT, GASMIZER SYSTEM

PRODUCT / PROJECT No. P1805
PART No. N/A
DRAWING No. P1805901S1

SIZE	SCALE	SHT	OF	REV
A2	NTS	1	1	R00

DIVEX
DIVEX LIMITED
ENTERPRISE DRIVE
WESTHILL
ABERDEEN
AB32 6TQ
UNITED KINGDOM
Tel : +44(0)1224 740145
Fax : +44(0)1224 740172
email : info@divexglobal.com
www.divexglobal.com

Pipework Schematic Bell Equipment (2 Diver) B81496S1

ITEM NO.	DESCRIPTION	QTY.	MATERIAL	PART NO.	M.A.W.P.
1	ELBOW, MALE, 12-JIC X 3/4" NPT MALE, SS, MW P275BAR	1	316 SS	FJ6054	280 bar
2	EXTERNAL WATER TRAP, BELL EQUIPMENT	1	SEE 81211S1	C1211B	68 bar
3	NIPPLE, HEX, 3/4" NPT(M), SS, MW P441BAR	2	316 SS	FP698	440 bar
4	FTG,STREET ELBOW., 3/4"MNPT-3/4"FNPT	3	316 SS	FP699	351 bar
5	FLOAT/CHECK VALVE ASSY	1	SEE 81306S1	C1306A	68 bar
6	CONNECTOR,(M), 3/4"TUBE-3/4"MNPT,ST.ST.	2	316 SS	FS699	400 bar
7	NIPPLE, RED, HEX, 3/8"MNPT-1/4"MNPT, SS, WP 500BAR	1	316 SS	FP397	497 bar
8	VALVE,BALL,ASSY(REF VB397), 3/8"FNPT	3	316 SS	DM13540	206 bar
9	TUBE,STAINLESS STEEL, SEAMLESS, 1/4"OD X 0.036"	2ft	316 SS	TM296	404 bar
10	FTG,RUN TEE,MALE., 1/4"TUBE-1/4"MNPT	1	316 SS	FS296	551 bar
11	VALVE,METERING 1/4" TUBE	2	316 SS	VM299	295 bar
12	ADAPTOR,TUBE, 1/4"MNPT-1/4"TUBE	1	316 SS	FP298	517 bar
13	ADAPTOR,BELL EQUIPMENT	3	SEE 81331S1	G331A	24 bar
14	BPR ASSEMBLY	1	SEE 81221S1	C1221C	68 bar
15	ELBOW, 3/4"TUBE-3/4"MNPT,ST.ST.	2	316 SS	FS698	400 bar
16	TUBE,SEAMLESS, 3/4"OD X .064 WT, SS316	1ft	316 SS	TM698	239 bar
17	VALVE, INWARD RELIEF, 1/2" MNPT, 50 PSI	1	316 SS	VR498	177 bar
18	KIT,DEFLECTOR CAP,POPPET CHECK VALVE,1/2" MALE NPT	1	POLYETHYLENE	VC40P	N/A
19	NIPPLE, 3/8" (M) NPT X 3/8" (M) NPT, SS	2	316 SS	FP398	497 bar
20	WATER TRAP ASSY,INTERNAL BELL EQUIPMENT	1	SEE P180556S1	C1122C	SEE P180556S1
21	MISC,SILENCER	1	BRONZE	MC001	N/A
22	VALVE, OUTWARD RELIEF, 1/4" MNPT, 30 PSI	1	316 SS	VR291	177 bar
23	KIT,DEFLECTOR CAP,POPPET CHECK VALVE,1/4" MALE NPT	3	POLYETHYLENE	VC20P	N/A
24	FTG,CONNECTOR,MALE, 1/4"TUBE-1/4"MNPT	1	316 SS	FS299	551 bar
25	ELBOW, MALE, 3/4"NPT(M), SS, MW P400BAR	1	316 SS	FP694	440 bar
26	TEE, FEMALE, 3/4"NPT, SS, MW P310BAR	1	316 SS	FP697	241 bar
27	ELBOW, 90 DEG.,FEMALE, 3/4"FNPT,ST.ST.	1	316 SS	FP696	241 bar
28	SAECO VALVE ASSEMBLY	2	SEE 81151S1	C1151E	24 bar
29	VALVE, BALL, 3/4"FNPT, C/W DIVEX SS HANDLE.	2	316 SS	DM13550	68 bar
30	VALVE, INWARD RELIEF, 1/4" MNPT, 50 PSI	2	316 SS	VR290	177 bar
31	CONNECTOR, MALE, 8JIC - 3/4" MNPT, SS, C/W N & F	2	316 SS	FJ4014	379 bar
32	TEE,1/4"NPT F-1/4"NPT F-1/4"NPT M BRANCH	3	316 SS	FP289	386 bar
33	ELBOW, MALE., 1/4"TUBE-1/4"MNPT,ST.ST.	2	316 SS	FS297	551 bar
34	VALVE,CHECK, 1/4" MNPT	4	316 SS	VC298	177 bar
35	FTG,RUN TEE,FEMALE., 1/4"TUBE-1/4"FNPT	1	316 SS	FS289	454 bar
36	FTG,ELBOW,FEMALE, 1/4"TUBE-1/4"FNPT	1	316 SS	FS279	454 bar
37	O-RING	1	NITRILE	RN010-7	N/A
38	FTG,UNION,REDUCING, 1/4"TUBE-1/8"TUBE	1	316 SS	FS280	703 bar
39	TUBE,SEAMLESS, 1/8"X0.022 WALL, SS 316	2ft	316 SS	TM195	494 bar
40	ELBOW, MALE., 1/8"TUBE-1/8"MNPT,ST.ST.	3	316 SS	FS198	689 bar
41	FLOW METER WITHOUT VALVE, 0.5-3LPM, O2	2	-	GF202	N/A
42	ELBOW,MALE, 1/4"TUBE-1/8"MNPT,ST.ST.	1	316 SS	FS293	689 bar
43	FTG,CONNECTOR,FEMALE, 1/4"TUBE-1/4"FNPT	1	316 SS	FS298	454 bar
44	GAUGE, NEGATIVE PRESSURE, +20MSW/-40MSW	1	316 SS	GN203	+2 bar/-4 bar
45	PANEL,BELL EQUIPMENT	1	316 SS	P329A	N/A
46	FTG,ELBOW,MALE, 1/8"TUBE-1/4"MNPT	2	316 SS	FS199	551 bar
47	VALVE, BPR LOADER, 1/4"NPT(M/F), SS	1	SEE DM242100S1	DM242AB	7 bar
48	TEE, FEMALE, 1/4"NPT(F), SS, MW P386BAR	1	316 SS	FP299	386 bar
49	ELBOW, STREET, 1/4"FNPT-1/4"MNPT	2	316 SS	FP296	496 bar
50	VALVE,PLUG, 1/4" NPT FM / 1/4" NPT FM	2	316 SS	VP299	206 bar
51	CONNECTOR, MALE, 4-JIC X 1/4" MNPT, SS, WP 413BAR	2	316 SS	FJ2031	414 bar
52	KIT, INSTALLATION 2 DIVER BELL,	1	-	B1497	N/A

INSTALLATION KIT COMPRISES (B1497)

ITEM NO.	DESCRIPTION	QTY.	PART NO.
3	NIPPLE, HEX, 3/4" NPT(M), SS, MW P441BAR	2	FP698
4	FTG,STREET ELBOW., 3/4"MNPT-3/4"FNPT	2	FP699
6	CONNECTOR,(M), 3/4"TUBE-3/4"MNPT,ST.ST.	2	FS699
29	VALVE, BALL, 3/4"FNPT, C/W DIVEX SS HANDLE.	2	DM13550
-	MISC,BELL CARD, A5	2	MC044
-	TAG,BELL EQP.EXTERNAL SET	1	T273A
-	TAG,2 DIVER BELL EQP.INT. SET, SET OF 11	1	T536A

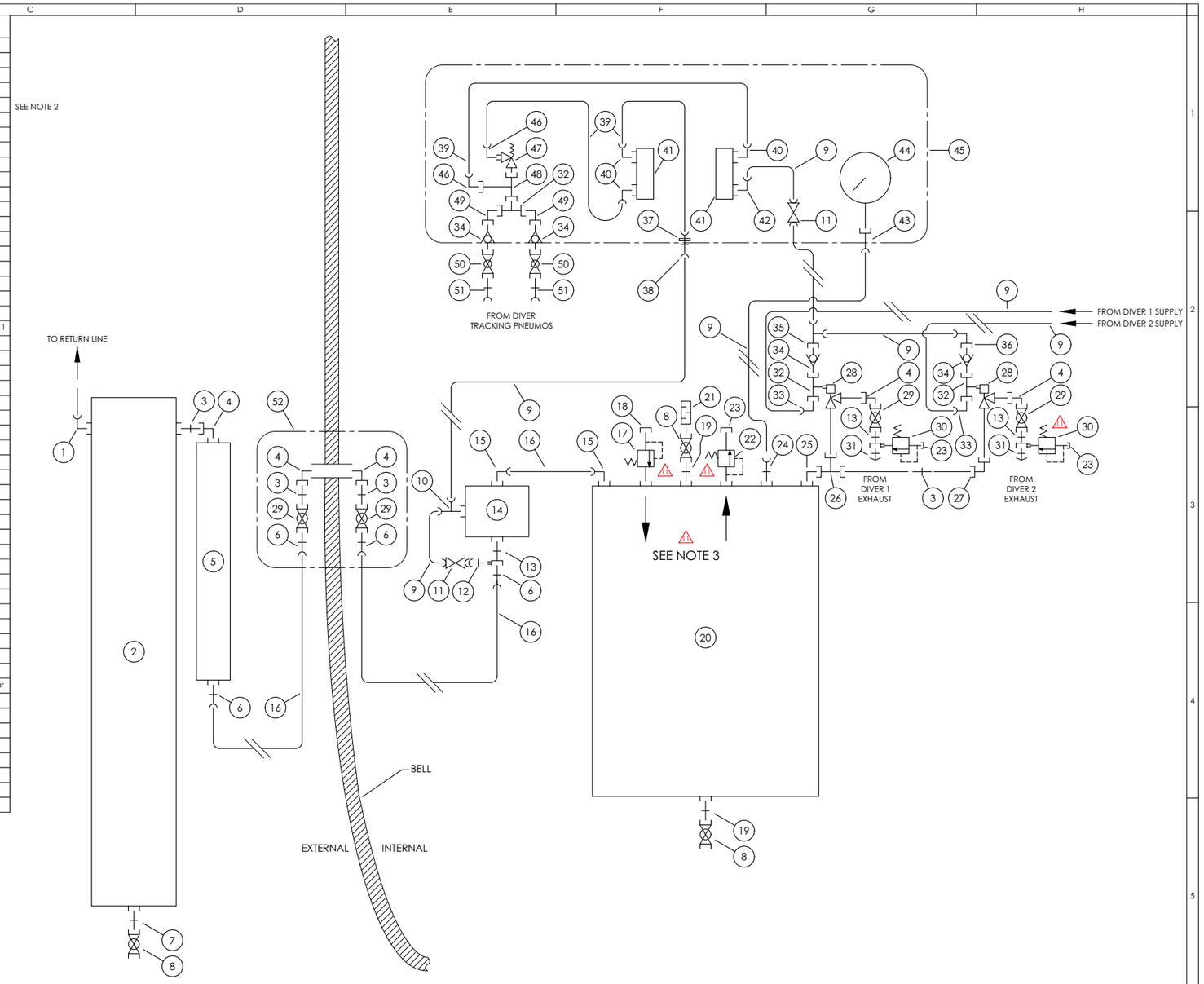

NOTES:
1. PIPEWORK DENOTED \\ IS NOT FITTED / SUPPLIED
2. ITEM 5 TO BE INSTALLED AS A CHECK VALVE WITH GAS FLOW FROM THE BOTTOM
3. ENSURE RELIEF VALVES ARE INSTALLED TO ALLOW GAS FLOW IN THE INDICATIVE DIRECTION ⚠

⚠ DENOTES CHANGES MADE AT THIS REVISION

REV	DESCRIPTION	ECN	BY	DATE	AUTH.
R11	DIRECTION ARROWS & NOTE 3 ADDED. RV SYMBOLS UPDATED	28211	KR	24/02/22	JM
R10	PRESSURES UPDATED ON BoM	24526	SR	05/12/19	AN
R09	NOTE 2 ADDED	23343	SD	18/03/19	AN
R00	ISSUED FOR MANUFACTURE		EB	18/03/82	HS

THIRD ANGLE PROJECTION — DO NOT SCALE DRAWING

JFD OWNS THE COPYRIGHT OF THIS DOCUMENT AND ANY DESIGN RIGHT HEREIN. IT IS SUPPLIED IN CONFIDENCE AND MUST NOT BE USED FOR ANY PURPOSE OTHER THAN THAT FOR WHICH IT IS SUPPLIED AND MUST NOT BE REPRODUCED WITHOUT PERMISSION IN WRITING FROM THE OWNERS.

TITLE: PIPEWORK SCHEMATIC, BELL EQUIPMENT, 2 DIVER

DRAWING NO. B81496S1 — REV R11
PART NO. B1496A — PRODUCT / PROJECT No. P1805
SIZE A2 — SCALE (UOS) NTS — SHEET 1 OF 1

JFD
JFD WESTHILL
ENTERPRISE DRIVE,
WESTHILL, ABERDEEN,
AB32 6TQ, UK
TEL: +44 (0)1224 740145
E: enquiries@jfdglobal.com
W: jfdglobal.com

Back Pressure Regulator (B.P.R.) Assembly B81221S1

ITEM NO.	PART NO.	DESCRIPTION	QTY.	MATERIAL	MAWP.
1	GP203	GAUGE, PANEL, CLAMP, 63MM, O2, 0-1000PSI	1	BRASS	69 bar
2	FS206	FTG,RUN TEE,FEMALE., 1/4"TUBE-1/4"FNPT	1	BRASS	227 bar
3	FS207	FTG,ELBOW ,FEMALE, 1/4"TUBE-1/4"FNPT	1	BRASS	227 bar
4	VS208	VALVE,NEEDLE, WHITEY, B-1VM4	1	BRASS	161 bar
5	FP204	ELBOW , MALE/FEMALE, 1/4" NPT, BRASS, WP220BAR	1	BRASS	221 bar
6	FP202	TEE, FEMALE PIPE, 1/4" FNPT, BRASS, WP220BAR	1	BRASS	221 bar
7	FS202	FTG,ELBOW ,MALE, 1/4"TUBE-1/4"MNPT	4	BRASS	275 bar
8	VB201	VALVE,BALL,1/4"FNPT	2	BRASS	206 bar
9	DM175	O2 ORIFICE ASSY, MAKE-UP	1	B81134S3	69 bar
10	VC202	VALVE,CHECK, 1/4" FNPT	1	BRASS	206 bar
11	FS204	FTG,CONNECTOR,FEMALE, 1/4"TUBE-1/4"FNPT	1	BRASS	227 bar
12	GP206	GAUGE, 4", O2, 0-1600 PSI	1	SS	110 bar
13	FS496	FTG,ELBOW ,MALE, 1/2"TUBE-1/2"MNPT	2	316 SS	462 bar
14	FP411	ELBOW , MALE-MALE, 1/2"(M)NPT	1	BRASS	269 bar
15	RP404	REGULATOR, PRESSURE, 0-1500 PSI	1	BRASS	258 bar
16	FP206	PLUG,HEX,MALE, 1/4"MNPT	1	BRASS	269 bar
17	FS488	CONNECTOR, 1/2" TUBE - 1/4" NPT MALE	1	316 SS	462 bar
18	FS279	FTG,ELBOW ,FEMALE, 1/4"TUBE-1/4"FNPT	1	316 SS	454 bar
19	FS486	FTG,ELBOW , 1/2"TUBE-1/4"MNPT	3	316 SS	462 bar
20	GP274	GAUGE,63MM,0-4000 PSI,O2 CLEAN,1/4"MNPT REAR ENTRY	1	SS	275 bar
21	TM201	TUBE,COPPER, SEAMLESS, 1/4"OD X .049	3M	COPPER	172 bar
22	TM296	TUBE,STAINLESS STEEL, SEAMLESS, 1/4"OD X 0.036"	2M	316 SS	397 bar
23	TM23151	TUBE, STAINLESS 316, SEAMLESS, 1/2" OD X 16SWG	4M	316 SS	351 bar
24	TM204	TUBE,FLEXIBLE,BLACK, 1/4"OD(100 FT COIL)	1M	NYLON	20 bar
25	FP209	NIPPLE,HEX, 1/4"MNPT-1/8"MNPT	1	BRASS	269 bar
26	FS299	FTG,CONNECTOR,MALE, 1/4"TUBE-1/4"MNPT	1	316 SS	551 bar
27	FB012	SCREW ,M/C,PAN HD, 1/4"UNC X 1/2"	2	SS	-
28	FW019	WASHER,PLAIN, NYLON 9/16"ODX1/4"IDX1/16"THK	2	NYLON	-
29	DM23620	FLOW SWITCH ASSEMBLY, MWP 1500 PSI.	1	B82362S1	103 bar
30	RK209	BRACKET,MOUNTING,TESCOM	1	-	-
31	FS205	CONNECTOR, BULKHD, FEMALE, 1/4"TUBE, 1/4"FNPT	1	BRASS	227 bar
32	FP295	TEE, MALE RUN, 1/4" NPT F-M-F, SS, WP 390BAR	1	316 SS	386 bar
33	VE101	VALVE,SOLENOID,1/8" FNPT 12 VDC	1	BRASS	69 bar
34	FS209	FTG,ELBOW ,MALE, 1/4"TUBE-1/8"MNPT	1	BRASS	344 bar

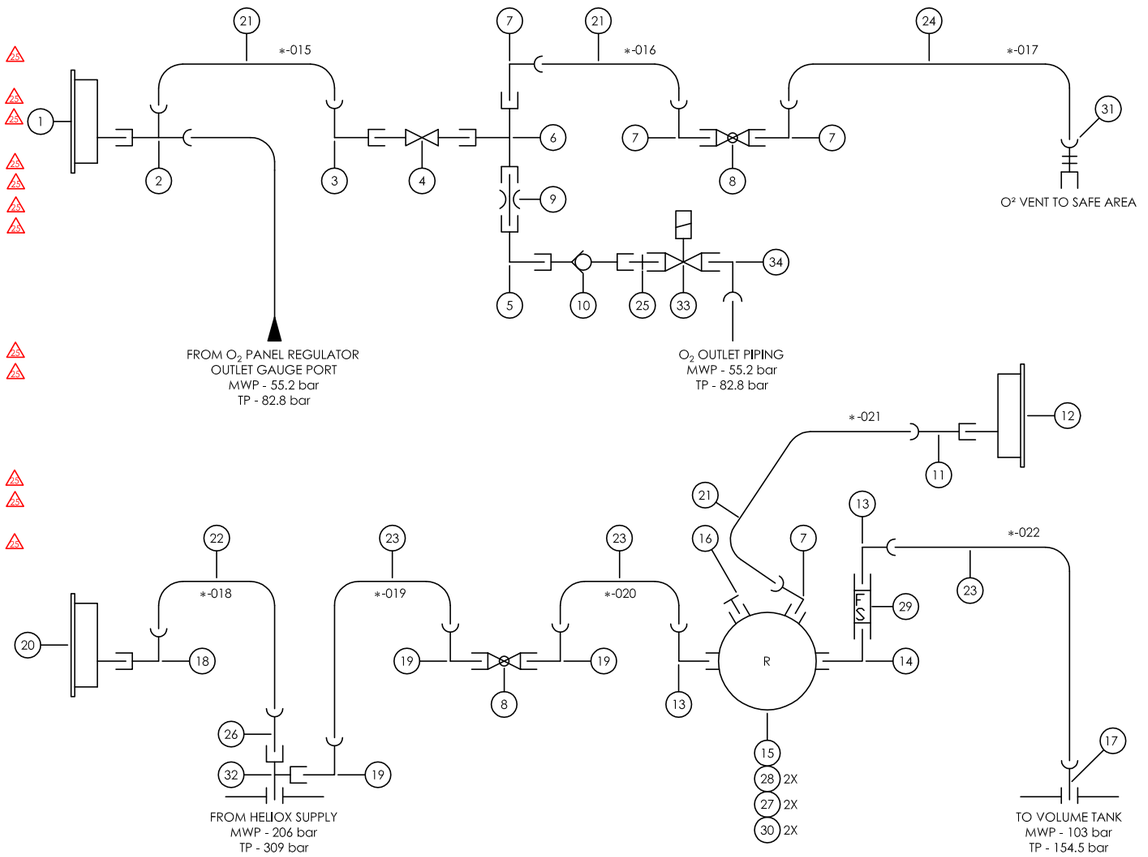

NOTES:

REV	DESCRIPTION	ECN	BY	DATE	AUTH.
R25	PRESSURES UPDATED ON BoM	24526	SR	05/12/19	AN
R24	IDENTIFIERS ADDED	23523	SD	12/04/19	AN
R23	EM019 REPLACED FOR FS205	22327	RC	17/04/18	AN
R00	ISSUED FOR MANUFACTURE		MS	24/01/91	HS

DENOTES CHANGES MADE AT THIS REVISION

THIRD ANGLE PROJECTION

DO NOT SCALE DRAWING

JFD OWNS THE COPYRIGHT OF THIS DOCUMENT AND ANY DESIGN RIGHT HEREIN. IT IS SUPPLIED IN CONFIDENCE AND MUST NOT BE USED FOR ANY PURPOSE OTHER THAN THAT FOR WHICH IT IS SUPPLIED AND MUST NOT BE REPRODUCED WITHOUT PERMISSION IN WRITING FROM THE OWNERS.

TITLE: PIPING SCHEMATIC, MAKE UP PANEL

DRAWING NO.: B81229S1 | REV: R25

PART NO.: C1229 | PRODUCT / PROJECT No.: GASMIZER

SIZE: A2 | SCALE (UOS): NTS | SHEET: 1 OF 1

JFD WESTHILL
ENTERPRISE DRIVE,
WESTHILL, ABERDEEN,
AB32 6TQ, UK

TEL: +44 (0) 1224 740145
E: enquiries@jfdglobal.com
W: jfdglobal.com

Water Trap Assy, Internal Bell Equipment P180556S1

ITEM NO.	PART NO.	DESCRIPTION	QTY.	MATERIAL
1	C1298	VALVE,ISOLATING, WATER TRAP ASSEMBLY	1	SEE P180581248S1
2	RN155-7	O-RING	4	NITRILE
3	DM173D	TOP TUBE W/BAFFLE	1	SEE B81173S1
4	M4720	BOTTOM TUBE	1	SEE P189681472S1
5	M171D	TOP PLATE,INTERNAL WATER TRAP	1	SEE C81171S1
6	M1702	PLATE, BASE, INTERNAL WATER TRAP	1	SEE P180568S1
7	M1701	W/TRAP RODS	2	SEE C81170S1
8	FN001	NUT,HEX, 1/4"UNC	2	316 SS
9	FW002	WASHER,SPRING, 1/4", SS 316	2	316 SS
10	FN003	NUT,WING, 1/4"UNC	2	316 SS
11	DM172D	BRACKET,WATER TRAP	1	SEE B81172S1

DESIGN SPECIFICATIONS:
DESIGN GUIDE = PD5500 (2015), ASME PVHO-1-2016
DESIGN PRESSURE = 3.5 bar EXTERNAL & 2.1 bar INTERNAL
DESIGN TEMPERATURE = +55°C
TEST PRESSURE = 4.75 bar EXTERNAL & 2.75 bar INTERNAL
CORROSION ALLOWANCE = NONE

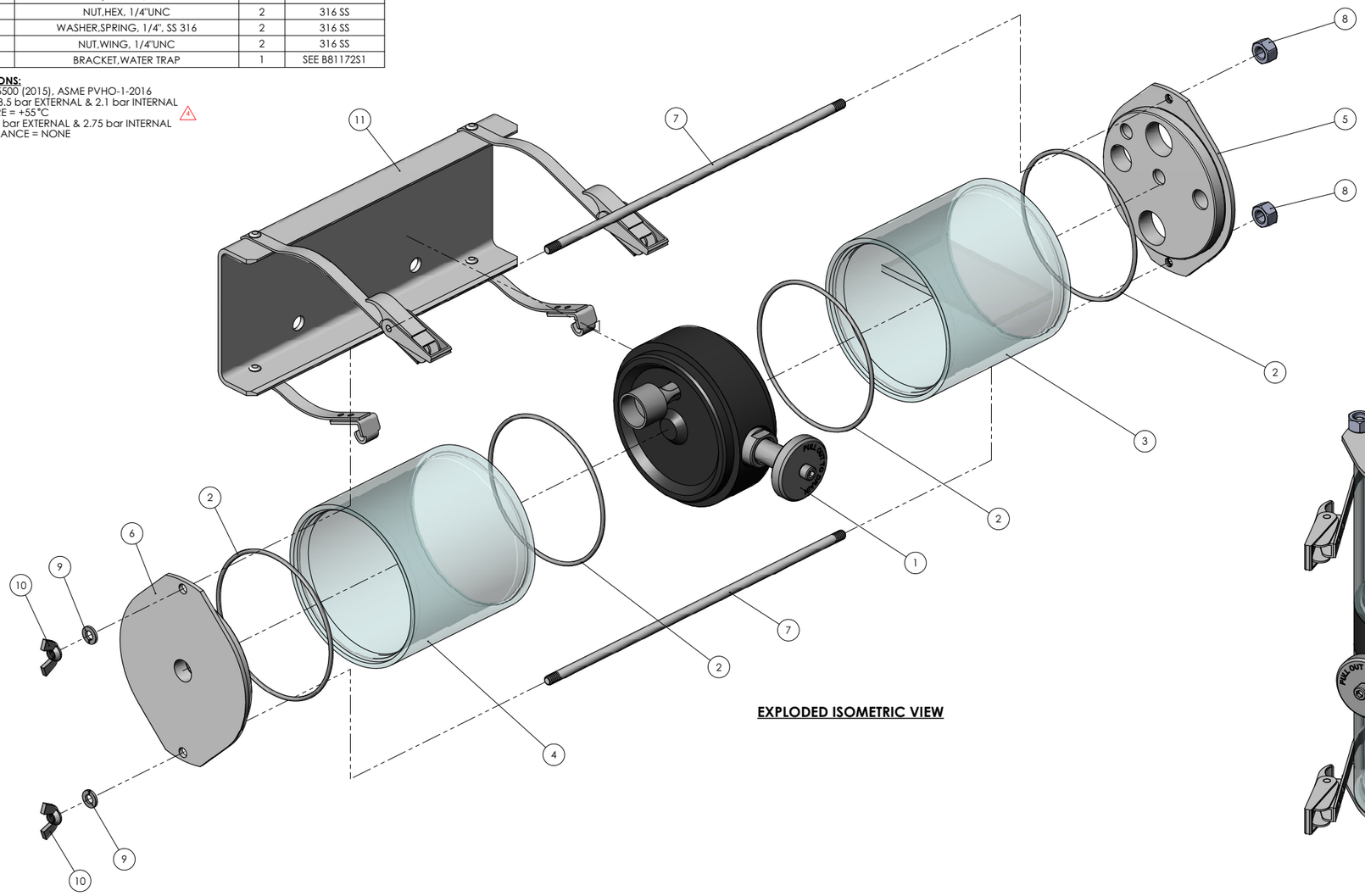

EXPLODED ISOMETRIC VIEW

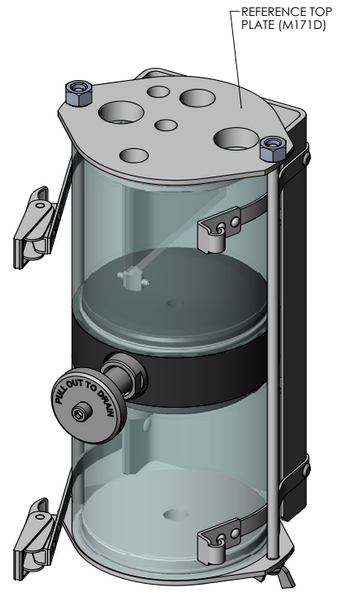

WATER TRAP ASSEMBLY USAGE ORIENTATION

NOTES:
1. MANUFACTURE IN ACCORDANCE WITH P1805-AP-11

DENOTES CHANGES MADE AT THIS REVISION

REV	DESCRIPTION	ECN	BY	DATE	AUTH.
R04	DESIGN SPEC CORRECTED	19698	JR	04/01/17	AN
R03	DESIGN SPEC ADDED	19698	MJ	12/07/16	AN
R02	PARTS LIST UPDATED & NOTE ADDED	17492	MJ	18/02/15	SC
R00	ISSUED FOR MANUFACTURE	X	KWC	13/06/01	HS

THIRD ANGLE PROJECTION
DO NOT SCALE DRAWING

JFD OWNS THE COPYRIGHT OF THIS DOCUMENT AND ANY DESIGN RIGHT HEREIN. IT IS SUPPLIED IN CONFIDENCE AND MUST NOT BE USED FOR ANY PURPOSE OTHER THAN THAT FOR WHICH IT IS SUPPLIED AND MUST NOT BE REPRODUCED WITHOUT PERMISSION IN WRITING FROM THE OWNERS.

TITLE: **WATER TRAP ASSY, INTERNAL BELL EQUIPMENT**
DRAWING NO.: **P180556S1** REV: **R04**
PART NO.: C1122C
PRODUCT / PROJECT No.: BELL EQUIPMENT
SIZE: A2 SCALE (UOS): 1:2 SHEET: 1 OF 1

JFD WESTHILL
ENTERPRISE DRIVE,
WESTHILL, ABERDEEN,
AB32 6TQ, UK
TEL: +44 (0)1224 740145
E: enquiries@jfdglobal.com
W: jfdglobal.com

Loader, BPR Assembly 81242S1

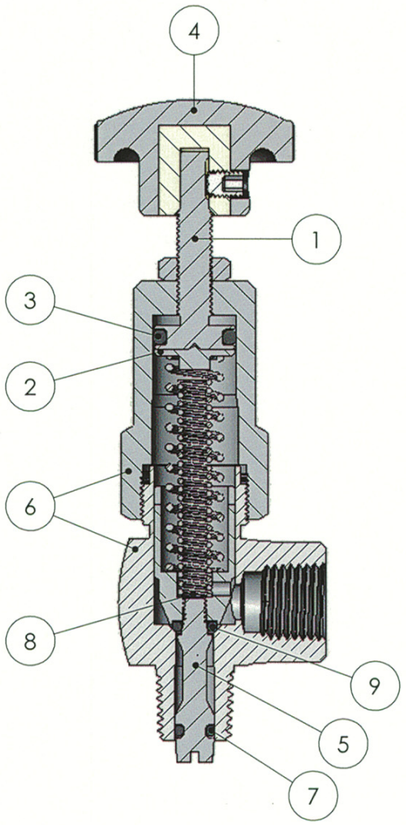

SECTION A - A

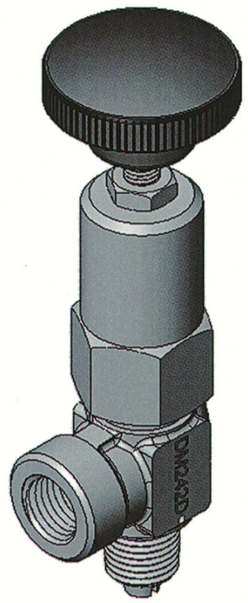

ISOMETRIC

ITEM	PART No.	DESCRIPTION	Qty.
1	V2371	BPR Loader Piston	1
2	V2372	BPR Loader Button	1
3	RN110-7	O-Ring	1
4	VM025	Whitey Black Plastic Handle	1
5	V332	BPR Loader, Auto - Tracking, Mod	1
6	VR298	Valve, Relief, (Sell DM242D Assy)	1
7	RN007-7	O-Ring	1
8	V5940	Spring, BPR Loader	1
9	E13991	O-Ring	1

NOTES :

REV	DESCRIPTION OF REVISION	ECN
R10	REDRAWN IN SOLIDWORKS	8999

MATERIAL: SEE PARTS LIST

FINISH: -

DIVEX OWNS THE COPYRIGHT OF THIS DOCUMENT AND ANY DESIGN RIGHT EMBODIED HEREIN. IT IS SUPPLIED IN CONFIDENCE AND MUST NOT BE USED FOR ANY PURPOSE OTHER THAN THAT FOR WHICH IT IS SUPPLIED AND MUST NOT BE REPRODUCED WITHOUT PERMISSION IN WRITING FROM THE OWNERS

ALL DIMENSIONS IN MM (UOS)
ALL DIMENSIONS BEFORE PLATING (UOS)
REMOVE SHARP EDGES & BURRS

DIMENSIONAL TOLERANCES:
NO DECIMAL PLACES ±1.0
ONE DECIMAL PLACE ±0.2
TWO DECIMAL PLACES ±0.05
ANGULAR TOLERANCE ±0.5°

DIVEX LIMITED
ENTERPRISE DRIVE
WESTHILL
ABERDEEN. AB32 6TQ
UNITED KINGDOM.
TEL : +44 (0)1224 740145
FAX : +44 (0)1224 740172
email : info@divex.co.uk
www.divex.co.uk

A3

SCALE: 1 : 1
PRODUCT: BELL EQUIPMENT
PART No.: DM242D
TITLE: **LOADER, BPR, ASSEMBLY**

3RD ANGLE PROJECTION

DO NOT SCALE DRAWING

DRAWN BY: M.McCaskill
DATE: 09/02/2007
DRG No.: 81242S1
SHEET: 1 of 2
REV: R10

SAECO Valve Assembly C81151S1

ITEM NO.	PART NO.	DESCRIPTION	QTY.
1	DM151E	SAECO VALVE,SUB ASSY	1
2	RN026-7	O-RING	1
3	V1514	PLATE, SAECO VALVE	1
4	RN018-7	O-RING	1
5	RN014-7	O-RING	1
6	V1504	SEAT, SAECO VALVE	1
7	FB048	SCREW, SOCKET SET, FLAT BOTTOM, 1/4" BSF X 3/8"	1
8	RN114-7	O-RING	1
9	FW011	WASHER,PLAIN, 1" O.D. X 3/8" I.D., ST. STEEL	2
10	FW025	WASHER,PLAIN, 1" O.D. X 3/8" I.D., TEFLON	1
11	V1520	SPRING SPACER, 42 X 60 X .5MM	1
12	V1516	SPRING,SPACER, 42MM LX45MMWX0 .5MM THK.	1
13	V1503	PISTON/INDICATOR ROD ASSY, SAECO VALVE.	1
14	RN210-7	O-RING	1
15	V5210	SPRING,OUTER, SAECO VALVE	1
16	V5230	SPRING,MIDDLE, SAECO VALVE	1
17	V5220	SPRING,INNER, SAECO VALVE	1
18	FB041	SCREW,CAP,SCKT, 10UNC X 1",316 ST.ST.	4

DESIGN SPECIFICATION: 15

DIVER SIDE DESIGN PRESSURE: 3.5 bar (EXT.)
DIVER SIDE TEST PRESSURE: 4.75 bar (EXT.)
GAS SUPPLY SIDE DESIGN PRESSURE: 24.0 bar (INT.)
GAS SUPPLY SIDE TEST PRESSURE: 32 bar (INT.)
DESIGN TEMP: +55°C
CORROSION ALLOWANCE: NONE

ISOMETRIC VIEW

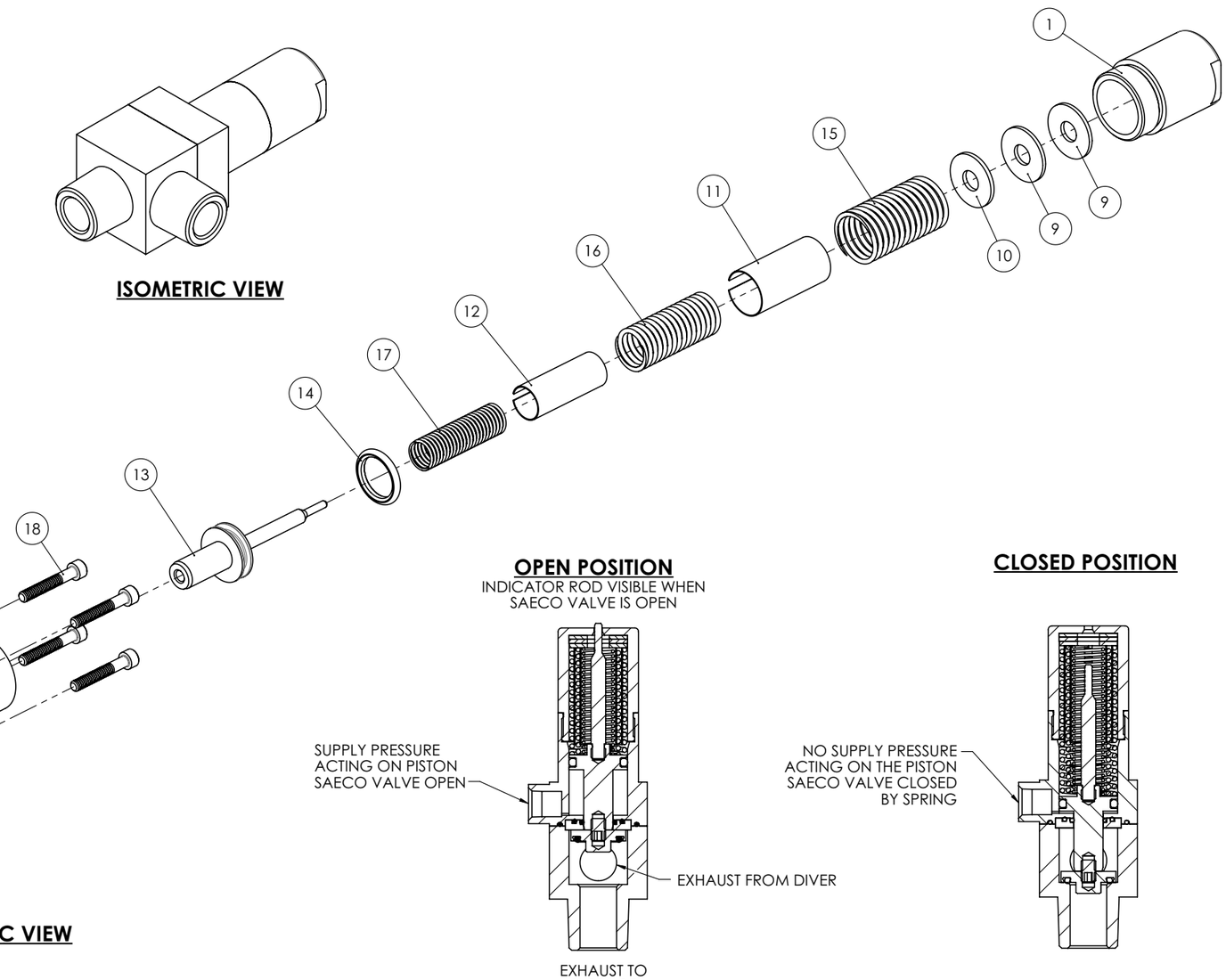

EXPLODED ISOMETRIC VIEW

OPEN POSITION
INDICATOR ROD VISIBLE WHEN SAECO VALVE IS OPEN

CLOSED POSITION

NOTES:

REV	DESCRIPTION	ECN	BY	DATE	AUTH.
R15	DESIGN CODE REMOVED	27938	JR	22/09/21	AB
R14	DESIGN SPEC ADDED	19698	MJ	12/07/16	AN
R13	TOP HALF OF VALVE ROTATED	13687	DR	27/10/10	GMcC
R00	ISSUED FOR MANUFACTURE		KM	18/12/91	GSH

15 DENOTES CHANGES MADE AT THIS REVISION

THIRD ANGLE PROJECTION

DO NOT SCALE DRAWING

JFD OWNS THE COPYRIGHT OF THIS DOCUMENT AND ANY DESIGN RIGHT HEREIN. IT IS SUPPLIED IN CONFIDENCE AND MUST NOT BE USED FOR ANY PURPOSE OTHER THAN THAT FOR WHICH IT IS SUPPLIED AND MUST NOT BE REPRODUCED WITHOUT PERMISSION IN WRITING FROM THE OWNERS.

TITLE: **SAECO VALVE ASSEMBLY**

DRAWING NO.: **C81151S1** REV: **R15**

PART NO.: C1151E

PRODUCT / PROJECT No.: SAECO VALVE

SIZE: A3 SCALE (UOS): 1:2 SHEET: 1 OF 1

JFD
JFD WESTHILL
ENTERPRISE DRIVE,
WESTHILL, ABERDEEN,
AB32 6TQ, UK

TEL: +44 (0)1224 740145
E: enquiries@jfdglobal.com
W: jfdglobal.com

Valve, Isolating, Water Trap Assembly P180581248S1

ITEM	PART No.	DESCRIPTION	QTY.	MATERIAL
1	DM298	VALVE,ISOLATING, WATER TRAP S/ASSY	1	SEE DM298S1
2	V5980	FLOAT,ISOLATION VALVE	1	POLYPROPLYENE
3	FB057	PIN, ROLL, 3/4" X 1/8"	1	316 SS
4	RN114-7	O-RING	1	NITRILE
5	RN210-7	O-RING	3	NITRILE
6	FB029	SCREW,CAP,SCKT, 1/4"UNC X 3/8"	1	316 SS

1

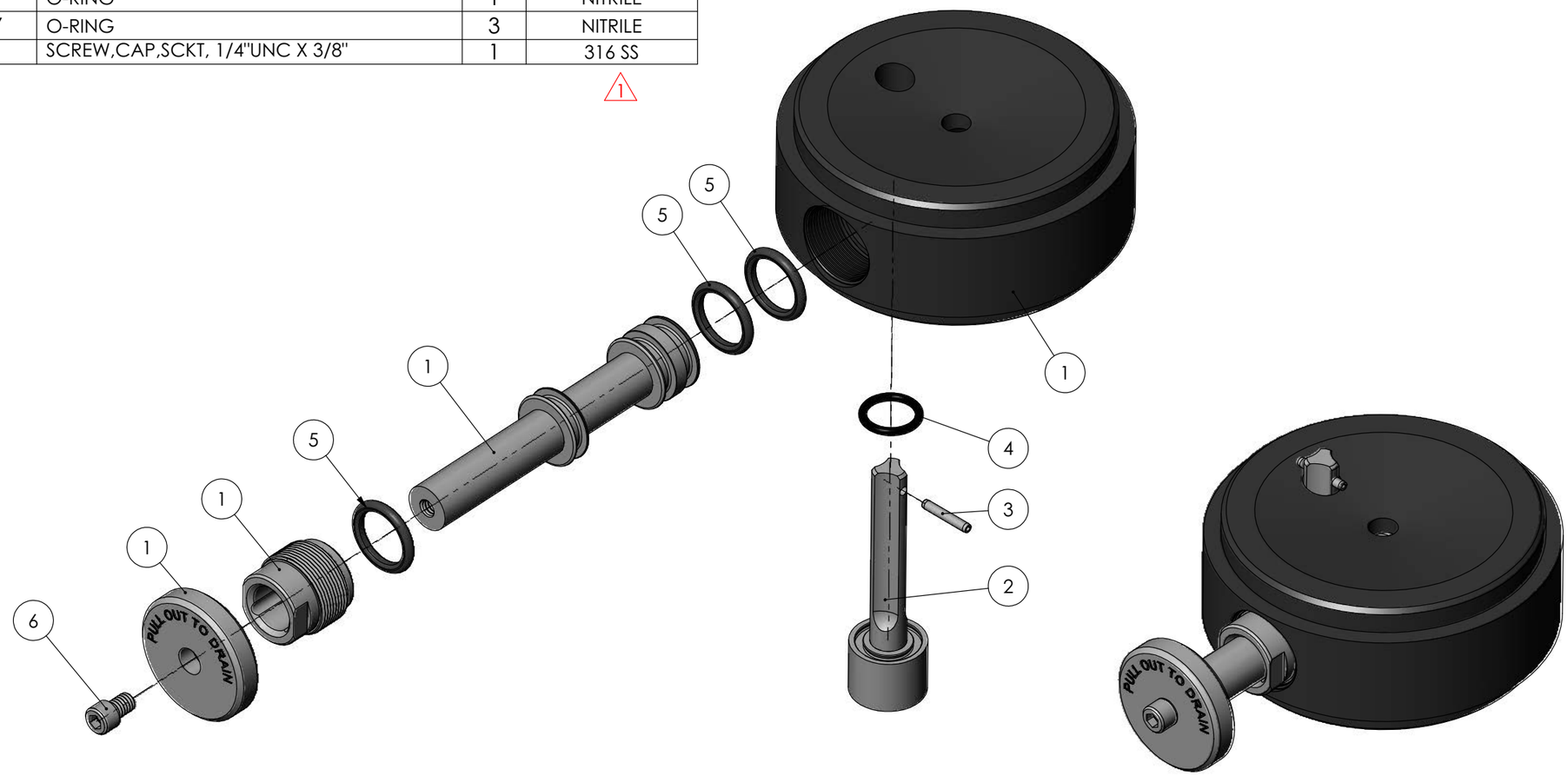

ISOMETRIC

DIVEX OWNS THE COPYRIGHT OF THIS DOCUMENT AND ANY DESIGN RIGHT HEREIN. IT IS SUPPLIED IN CONFIDENCE AND MUST NOT BE USED FOR ANY PURPOSE OTHER THAN THAT FOR WHICH IT IS SUPPLIED AND MUST NOT BE REPRODUCED WITHOUT PERMISSION IN WRITING FROM THE OWNERS.

NOTES

ALL DIMENSIONS SHOWN ARE IN MM (UOS)
ALL DIMENSIONS BEFORE PLATING (UOS)
REMOVE ALL SHARP EDGES AND BURRS

DIMENSIONAL TOLERANCES

MACHINING		FABRICATION	
NO DECIMAL PLACES	±1.0	SIZE >0 <100	±0.5
ONE DECIMAL PLACE	±0.2	SIZE >100 <500	±1.5
TWO DECIMAL PLACE	±0.05	SIZE >500	±3.0
ANGULAR TOLERANCE	±0.5°	ANGULAR TOLERANCE	±0.5°

1 DENOTES CHANGES MADE AT THIS REVISION

MATERIAL: SEE PARTS LIST

FINISH: N/A

THIRD ANGLE PROJECTION

REV	DESCRIPTION	ECN No.	BY	DATE	AUTH. BY
R06					
R05					
R04					
R03					
R02					
R01	MATERIAL COLUMN ADDED TO PARTS LIST	17492	MJ	23/02/15	SC
R00	ISSUED FOR MANUFACTURE		KB	07/12/06	RTW

DO NOT SCALE DRAWING

TITLE: **VALVE, ISOLATING, WATER TRAP ASSEMBLY**

DRAWING No. **P180581248S1** REV **R01**

PART No. C1298 PRODUCT / PROJECT No. P1805

SIZE A3 SCALE 1:1.5 SHEET 1 OF 1

DIVEX
DIVEX LIMITED
ENTERPRISE DRIVE
WESTHILL
ABERDEEN
AB32 6TQ
UNITED KINGDOM
Tel : +44(0)1224 740145
Fax : +44(0)1224 740172
email : info@divexglobal.com
www.divexglobal.com

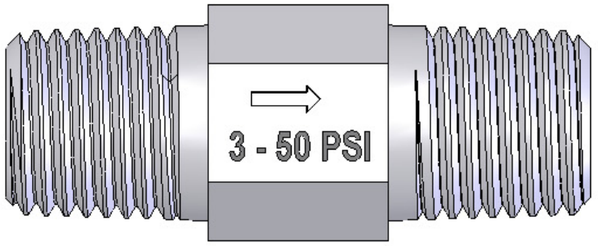

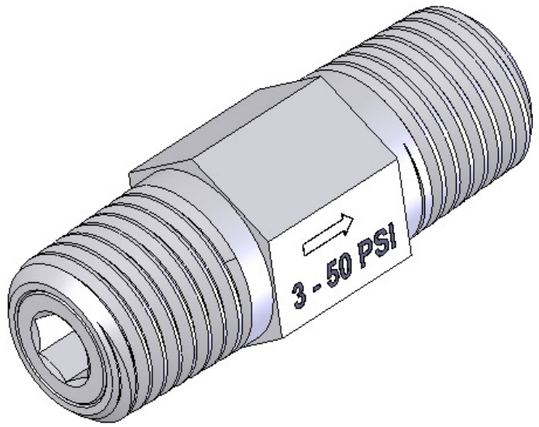

ISOMETRIC

SET PRESSURE : 30psi

NOTES :

REV	DESCRIPTION OF REVISION	ECN
R00	ISSUED FOR MANUFACTURE	N/A

3RD ANGLE PROJECTION

DO NOT SCALE DRAWING

MATERIAL: VR297

FINISH: -

DIVEX OWNS THE COPYRIGHT OF THIS DOCUMENT AND ANY DESIGN RIGHT EMBODIED HEREIN. IT IS SUPPLIED IN CONFIDENCE AND MUST NOT BE USED FOR ANY PURPOSE OTHER THAN THAT FOR WHICH IT IS SUPPLIED AND MUST NOT BE REPRODUCED WITHOUT PERMISSION IN WRITING FROM THE OWNERS

ALL DIMENSIONS IN MM (UOS)

ALL DIMENSIONS BEFORE PLATING (UOS)

REMOVE SHARP EDGES & BURRS

DIMENSIONAL TOLERANCES:
NO DECIMAL PLACES ±1.0
ONE DECIMAL PLACE ±0.2
TWO DECIMAL PLACES ±0.05
ANGULAR TOLERANCE ±0.5°

SCALE 2.5 : 1

PRODUCT BELL EQUIPMENT

PART No. VR291

DRAWN BY M.McCaskill

DATE 20/04/2007

DIVEX
DIVEX LIMITED
ENTERPRISE DRIVE
WESTHILL
ABERDEEN. AB32 6TQ
UNITED KINGDOM.
TEL : +44 (0)1224 740145
FAX : +44 (0)1224 740172
email : info@divex.co.uk
www.divex.co.uk

A3

TITLE

VALVE, OUTWARD RELIEF, ¼" NPT MALE

DRG No. 81322S1

SHEET 1 of 1

REV R00

Valve, Inward Relief, 1/2” NPT Male 81323S1

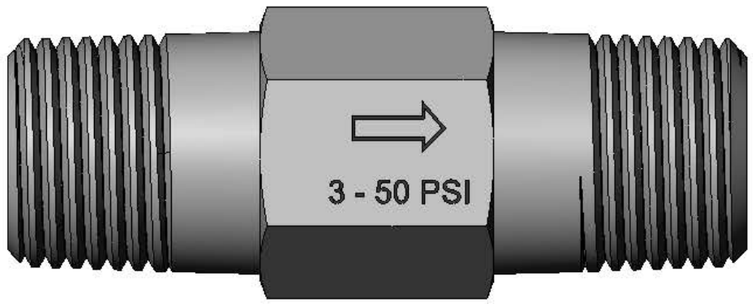

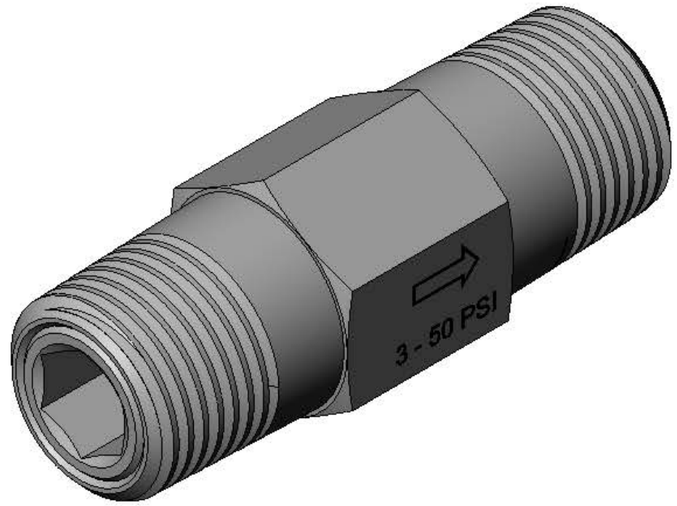

ISOMETRIC

SET PRESSURE : 50 PSI

NOTES :

REV	DESCRIPTION OF REVISION	ECN
R00	ISSUED FOR MANUFACTURE	N/A

MATERIAL: VR499

FINISH: -

DIVEX OWNS THE COPYRIGHT OF THIS DOCUMENT AND ANY DESIGN RIGHT EMBODIED HEREIN. IT IS SUPPLIED IN CONFIDENCE AND MUST NOT BE USED FOR ANY PURPOSE OTHER THAN THAT FOR WHICH IT IS SUPPLIED AND MUST NOT BE REPRODUCED WITHOUT PERMISSION IN WRITING FROM THE OWNERS

ALL DIMENSIONS IN MM (UOS)

ALL DIMENSIONS BEFORE PLATING (UOS)

REMOVE SHARP EDGES & BURRS

DIMENSIONAL TOLERANCES:
NO DECIMAL PLACES ±1.0
ONE DECIMAL PLACE ±0.2
TWO DECIMAL PLACES ±0.05
ANGULAR TOLERANCE ±0.5°

SCALE: 2 : 1

PRODUCT: BELL EQUIPMENT

PART No.: VR498

DRAWN BY: M.McCaskill

DATE: 20/04/2007

DIVEX LIMITED
ENTERPRISE DRIVE
WESTHILL
ABERDEEN. AB32 6TQ
UNITED KINGDOM.

TEL : +44 (0)1224 740145
FAX : +44 (0)1224 740172
email : info@divex.co.uk
www.divex.co.uk

A3

TITLE: **VALVE, INWARD RELIEF, ½" NPT MALE**

DRG No.: 81323S1

SHEET: 1 of 1

REV: R00

3RD ANGLE PROJECTION

DO NOT SCALE DRAWING

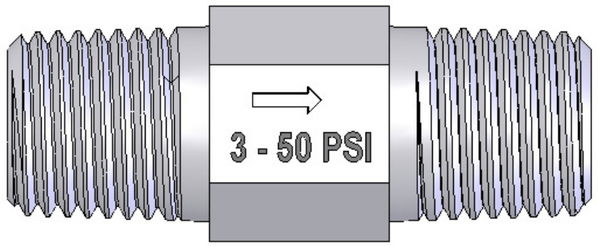

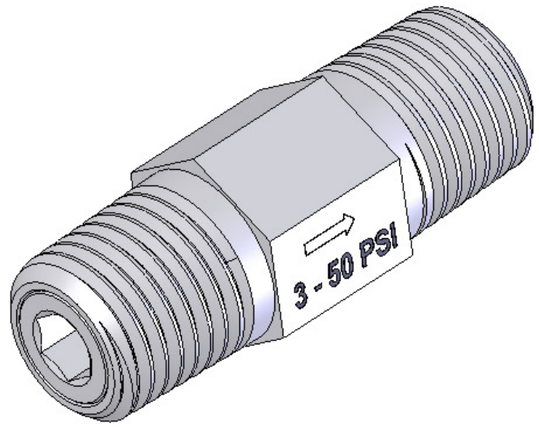

ISOMETRIC

SET PRESSURE : 50psi

NOTES :

REV	DESCRIPTION OF REVISION	ECN
R00	ISSUED FOR MANUFACTURE	N/A

3RD ANGLE PROJECTION

DO NOT SCALE DRAWING

MATERIAL: VR297

FINISH: -

DIVEX OWNS THE COPYRIGHT OF THIS DOCUMENT AND ANY DESIGN RIGHT EMBODIED HEREIN. IT IS SUPPLIED IN CONFIDENCE AND MUST NOT BE USED FOR ANY PURPOSE OTHER THAN THAT FOR WHICH IT IS SUPPLIED AND MUST NOT BE REPRODUCED WITHOUT PERMISSION IN WRITING FROM THE OWNERS

ALL DIMENSIONS IN MM (UOS)

ALL DIMENSIONS BEFORE PLATING (UOS)

REMOVE SHARP EDGES & BURRS

DIMENSIONAL TOLERANCES:
NO DECIMAL PLACES ±1.0
ONE DECIMAL PLACE ±0.2
TWO DECIMAL PLACES ±0.05
ANGULAR TOLERANCE ±0.5°

SCALE: 2.5 : 1

PRODUCT: BELL EQUIPMENT

PART No.: VR290

DRAWN BY: M.McCaskill

DATE: 20/04/2007

DIVEX LIMITED
ENTERPRISE DRIVE
WESTHILL
ABERDEEN. AB32 6TQ
UNITED KINGDOM.

TEL : +44 (0)1224 740145
FAX : +44 (0)1224 740172
email : info@divex.co.uk
www.divex.co.uk

A3

TITLE: **VALVE, INWARD RELIEF, ¼" NPT MALE**

DRG No.: 81322S1

SHEET: 1 of 1

REV: R00

Bell External Water Trap General Assembly P180581491S1

Sheet 1 of 2

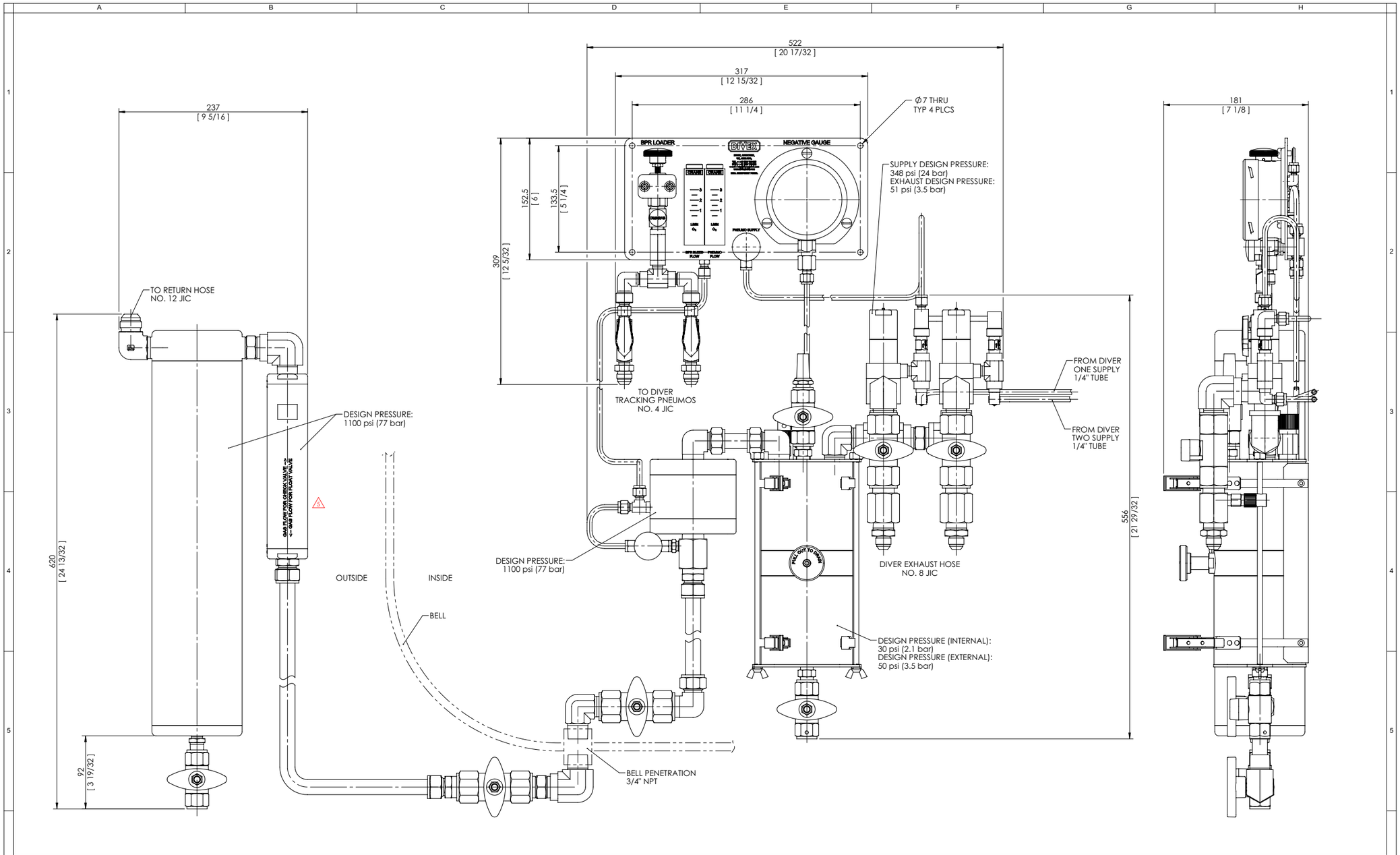

NOTES:
1. FITTINGS POSITIONS SHOWN MAY BE ALTERED TO SUIT INSTALLATION
2. FABRICATE BRACKETS TO SUIT INSTALLATION
3. MOUNT WATER TRAPS IN VERTICAL POSITION ONLY
4. MASS - APPROX. 31.5kg

DENOTES CHANGES MADE AT THIS REVISION

REV	DESCRIPTION	ECN	BY	DATE	AUTH.
R05	FLOAT/CHECK VALVE ORIENTAITON CORRECTED	23343	SD	18/03/19	AN
R04	UPDATED PRESSURE VALUES	21848	RC	21/02/18	AN
R03	REDRAWN IN SOLIDWORKS	8999	MM	27/09/07	RW
R00	ISSUED FOR MANUFACTURE				

THIRD ANGLE PROJECTION

DO NOT SCALE DRAWING

JFD OWNS THE COPYRIGHT OF THIS DOCUMENT AND ANY DESIGN RIGHT HEREIN. IT IS SUPPLIED IN CONFIDENCE AND MUST NOT BE USED FOR ANY PURPOSE OTHER THAN THAT FOR WHICH IT IS SUPPLIED AND MUST NOT BE REPRODUCED WITHOUT PERMISSION IN WRITING FROM THE OWNERS.

TITLE: **BELL EQUIPMENT, GENERAL ASSEMBLY**

DRAWING NO.: **P180581491S1** REV: **R05**

PART NO.: B1496A

PRODUCT / PROJECT No.: GASMIZER

SIZE: A2 SCALE (UOS): 1:3 SHEET: 1 OF 2

JFD WESTHILL
ENTERPRISE DRIVE,
WESTHILL, ABERDEEN,
AB32 6TQ, UK

TEL: +44 (0)1224 740145
E: enquiries@jfdglobal.com
W: jfdglobal.com

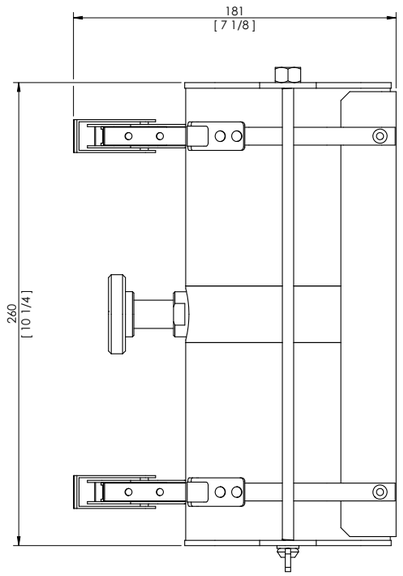

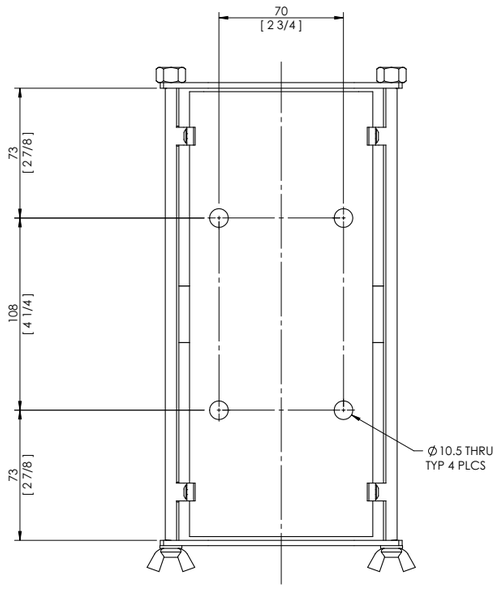

INTERNAL WATER TRAP ASSEMBLY
SHOWING MOUNTING DETAILS

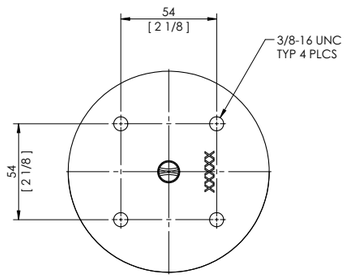

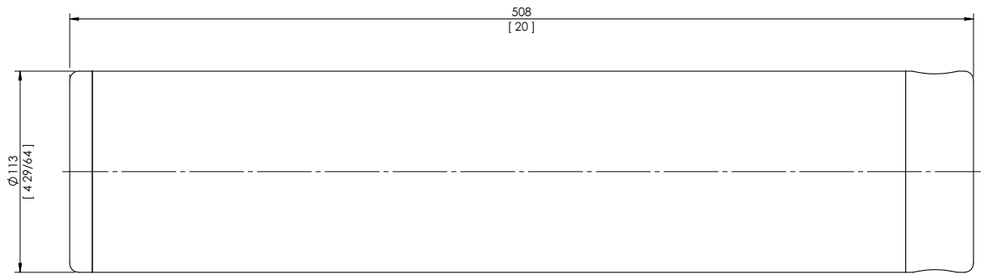

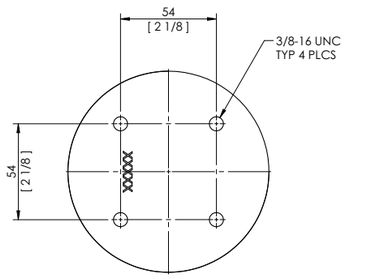

EXTERNAL WATER TRAP ASSEMBLY
SHOWING MOUNTING DETAILS

NOTES:

DENOTES CHANGES MADE AT THIS REVISION

REV	DESCRIPTION	ECN	BY	DATE	AUTH.
R05	FLOAT/CHECK VALVE ORIENTATION CORRECTED	23343	SD	18/03/19	AN
R04	UPDATED PRESSURE VALUES	21848	RC	21/02/18	AN
R03	REDRAWN IN SOLIDWORKS	8999	MM	27/09/07	RW
R00	ISSUED FOR MANUFACTURE				

THIRD ANGLE PROJECTION

DO NOT SCALE DRAWING

JFD OWNS THE COPYRIGHT OF THIS DOCUMENT AND ANY DESIGN RIGHT HEREIN. IT IS SUPPLIED IN CONFIDENCE AND MUST NOT BE USED FOR ANY PURPOSE OTHER THAN THAT FOR WHICH IT IS SUPPLIED AND MUST NOT BE REPRODUCED WITHOUT PERMISSION IN WRITING FROM THE OWNERS.

TITLE: **BELL EQUIPMENT, GENERAL ASSEMBLY**

DRAWING NO.: **P180581491S2** REV: **R05**

PART NO.: B1496A

PRODUCT / PROJECT No.: GASMIZER

SIZE: A2 SCALE (UOS): 1:2 SHEET: 2 OF 2

JFD WESTHILL
ENTERPRISE DRIVE,
WESTHILL, ABERDEEN,
AB32 6TQ, UK

TEL: +44 (0)1224 740145
E: enquiries@jfdglobal.com
W: jfdglobal.com

Float / Check Valve Assembly P180581306S1

ITEM NO.	PART NO.	DESCRIPTION	QTY.	MATERIAL
1	DM306A	FLOAT/CHECK VALVE ASSY	1	316 SS
2	V1182	FLOAT	1	POLYPROPYLENE
3	RN784-7	O-RING	2	NITRILE

DESIGN SPECIFICATION: ⚠

MAX WORKING PRESSURE: 1000PSI
DESIGN PRESSURE: 1100PSI
DESIGN TEMPERATURE: +55°C
HYDRO-TEST PRESSURE: 1450PSI
CORROSION ALLOWANCE: NONE

VALVE MOUNTING DETAILS:

1. WHEN IN USE AS A FLOAT VALVE, MOUNT VERTICALLY. GAS FLOW WILL BE FROM BASE (B) TO TOP (A).
2. WHEN IN USE AS A CHECK VALVE, MOUNT INVERTED VERTICALLY ON BELL SIDE OF EXTERNAL WATER TRAP. GAS FLOW WILL BE FROM TOP (A) TO BASE (B).

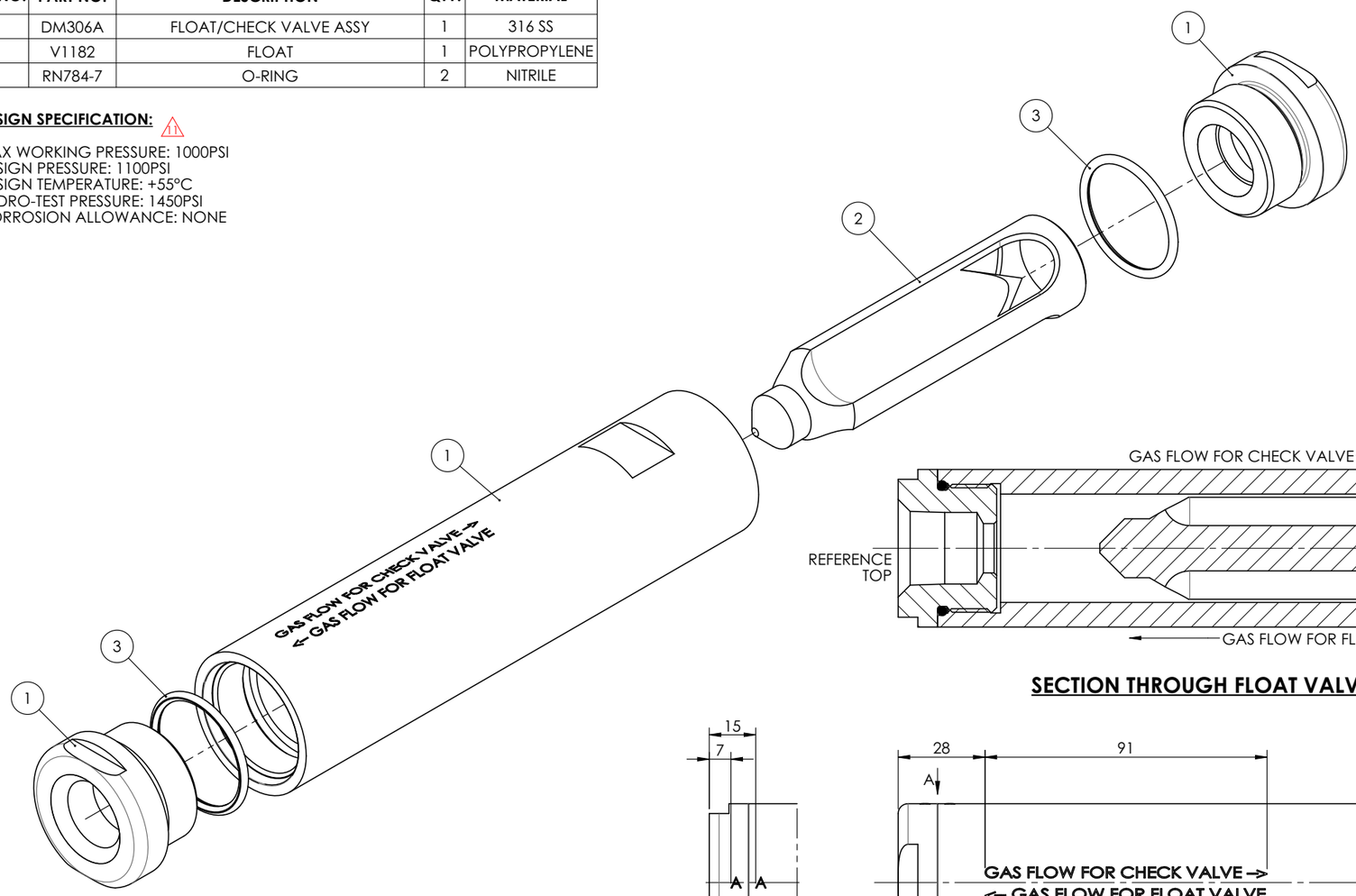

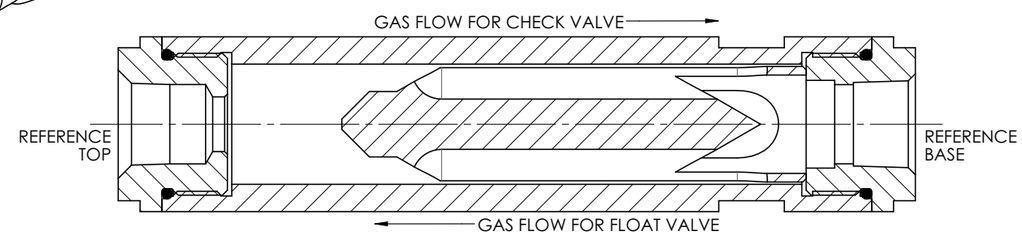

SECTION THROUGH FLOAT VALVE ASSEMBLY

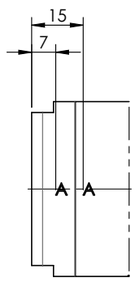

VIEW ON A

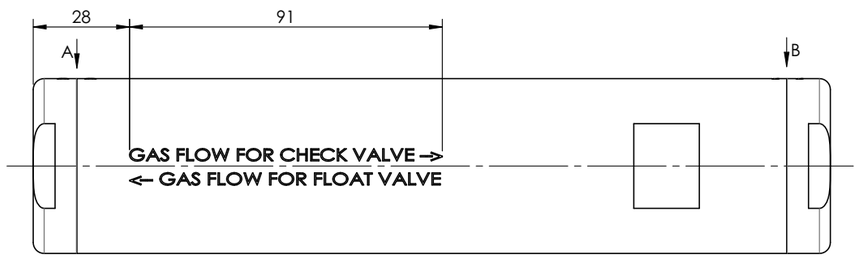

TEXT DETAILS

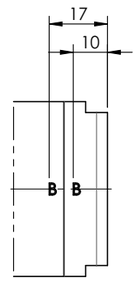

VIEW ON B

NOTES:
1. TEXT TO BE 3.5mm HIGH
2. TEXT TO BE CENTRE JUSTIFIED ON GIVEN CENTRELINES (UOS)

MATERIAL: SEE PARTS LIST
FINISH: N/A

ALL DIMENSIONS ARE IN mm (UOS)
ALL DIMENSIONS BEFORE PLATING (UOS)
REMOVE ALL SHARP EDGES AND BURRS

MACHINING TOLERANCE		FABRICATION TOLERANCE	
NO DECIMAL PLACE	±1.0	>0 <100	±0.5
ONE DECIMAL PLACE	±0.2	>100 <500	±1.5
TWO DECIMAL PLACE	±0.05	>500	±3.0
ANGULAR TOLERANCE	±0.5°		

⚠ DENOTES CHANGES MADE AT THIS REVISION

REV	DESCRIPTION	ECN	BY	DATE	AUTH.
R11	DESIGN CODE REMOVED	27928	JR	16/09/21	AB
R10	VIEWS ADDED & DESIGN SPECIFICATION UPDATED	23343	SD	18/03/19	AN
R09	DESIGN SPECIFICATION UPDATED	18476	MJ	17/09/15	PB
R00	ISSUED FOR MANUFACTURE	X	EB	26/06/82	JB

THIRD ANGLE PROJECTION
DO NOT SCALE DRAWING

JFD OWNS THE COPYRIGHT OF THIS DOCUMENT AND ANY DESIGN RIGHT HEREIN. IT IS SUPPLIED IN CONFIDENCE AND MUST NOT BE USED FOR ANY PURPOSE OTHER THAN THAT FOR WHICH IT IS SUPPLIED AND MUST NOT BE REPRODUCED WITHOUT PERMISSION IN WRITING FROM THE OWNERS.

TITLE: **FLOAT/CHECK VALVE ASSEMBLY**

DRAWING NO.: **P180581306S1** REV: **R11**
PART NO.: C1306A
PRODUCT / PROJECT No.: BELL EQUIPMENT
SIZE: A3 SCALE (UOS): 1:1.5 SHEET: 1 OF 1

JFD
JFD WESTHILL
ENTERPRISE DRIVE,
WESTHILL, ABERDEEN,
AB32 6TQ, UK
TEL: +44 (0)1224 740145
E: enquiries@jfdglobal.com
W: jfdglobal.com

P&ID, L.P. Gas System, Reprocessing Unit, Gasmizer System P1805902S1

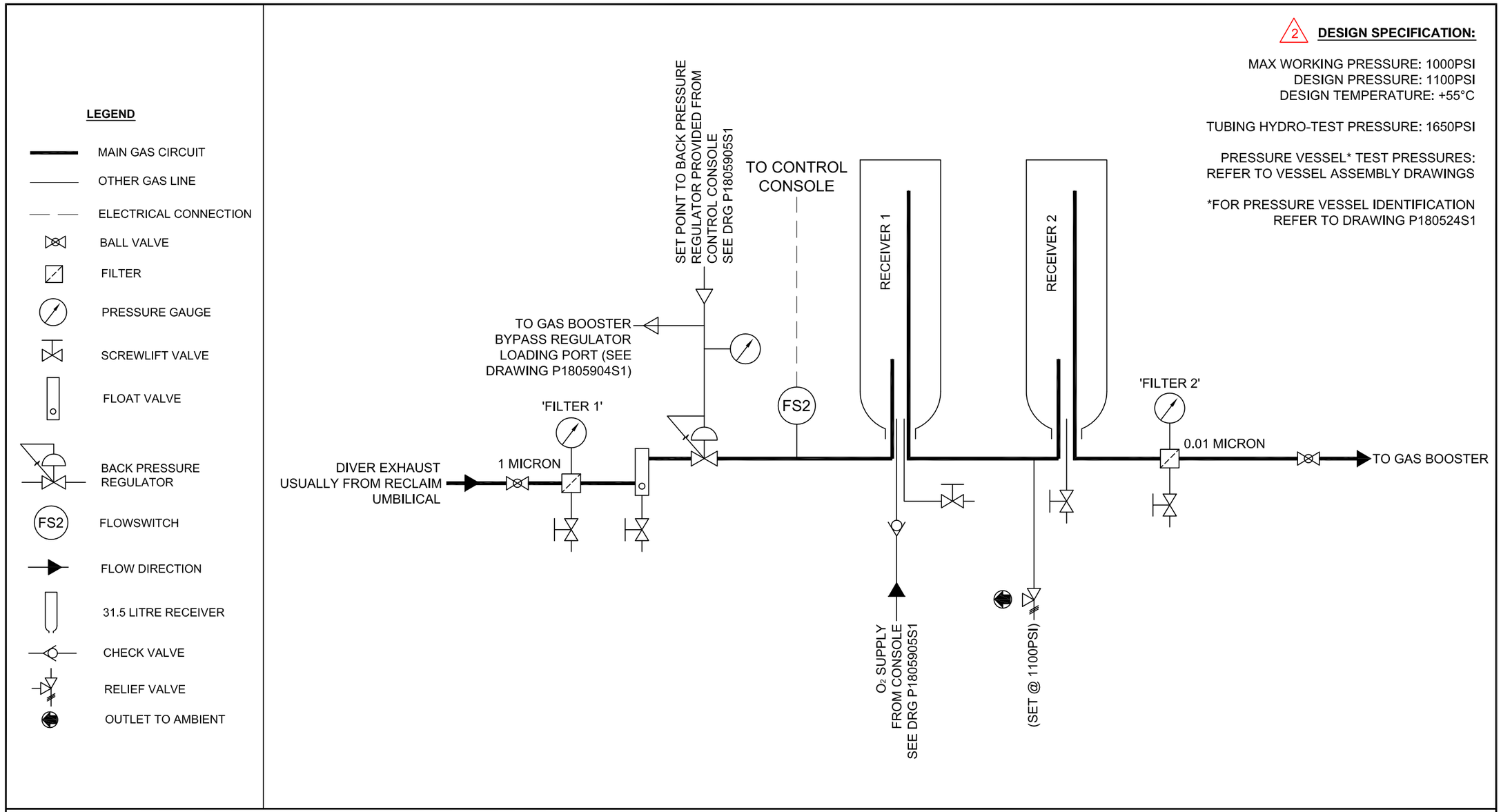

DIVEX OWNS THE COPYRIGHT OF THIS DOCUMENT AND ANY DESIGN RIGHT HEREIN. IT IS SUPPLIED IN CONFIDENCE AND MUST NOT BE USED FOR ANY PURPOSE OTHER THAN THAT FOR WHICH IT IS SUPPLIED AND MUST NOT BE REPRODUCED WITHOUT PERMISSION IN WRITING FROM THE OWNERS

NOTES

1. INPUTS AND OUTPUTS TO UNIT ARE ANNOTATED ASSUMING UNIT IS PART OF A CORRECTLY INSTALLED DIVEX GASMIZER SYSTEM.
2. FLOWSWITCH 2 COMPRISES 1 NORMALLY OPEN CONTACT, SWITCH CLOSES WHEN GAS FLOWS THROUGH UNIT.

2 DENOTES CHANGES MADE AT THIS REVISION.

ALL DIMENSIONS SHOWN ARE IN MM (UOS)
ALL DIMENSIONS BEFORE PLATING (UOS)
REMOVE ALL SHARP EDGES AND BURRS

DIMENSIONAL TOLERANCES

MACHINING		FABRICATION	
NO DECIMAL PLACES	±1.0	SIZE >0 <100	±0.5
ONE DECIMAL PLACE	±0.2	SIZE >100 <500	±1.5
TWO DECIMAL PLACE	±0.05	SIZE >500	±3.0
ANGULAR TOLERANCE	±0.5°	ANGULAR TOLERANCE	±0.5°

MATERIAL: N/A

FINISH: N/A

THIRD ANGLE PROJECTION

REV	DESCRIPTION	ECN No	BY	DATE	AUTH. BY
R06					
R05					
R04					
R03					
R02	DESIGN SPECIFICATION ADDED	18445	MJ	18/09/2015	PB
R01	RELIEF VALVE SETTING CHANGED FROM 1000PSI TO 1100PSI	13152	SJ	11/01/2010	RTW
R00	ISSUED FOR INFORMATION		GC	11/12/2008	RTW

DO NOT SCALE DRAWING

TITLE: PROCESS & INSTRUMENTATION DIAGRAM, L.P. GAS SYSTEM, REPROCESSING UNIT, GASMIZER SYSTEM

DRAWING No. P1805902S1 | REV R02

PART No. N/A | PRODUCT / PROJECT No. GASMIZER

SIZE A3 | SCALE NTS | SHT 1 OF 1

DIVEX
DIVEX LIMITED
ENTERPRISE DRIVE
WESTHILL
ABERDEEN
AB32 6TQ
UNITED KINGDOM
Tel: +44(0)1224 740145
Fax: +44(0)1224 740172
email: info@divexglobal.com
www.divexglobal.com

P&ID, H.P. Gas System, Reprocessing Unit, Gasmizer System P1805903S1

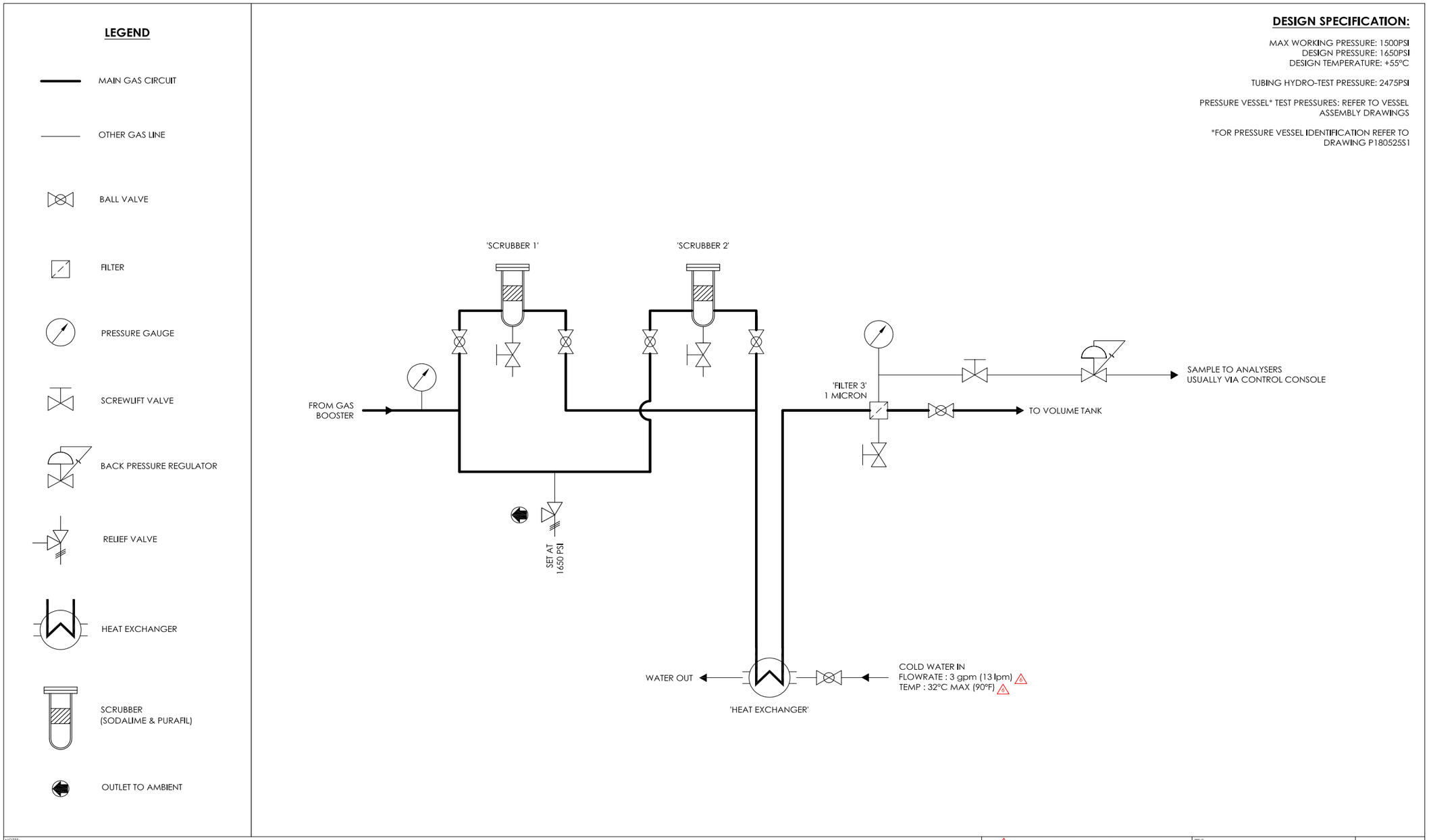

NOTES:

INPUTS AND OUTPUTS TO UNIT ARE ANNOTATED ASSUMING UNIT IS PART OF A CORRECTLY INSTALLED DIVEX GASMIZER SYSTEM.

△ DENOTES CHANGES MADE AT THIS REVISION

REV	DESCRIPTION	ECN	BY	DATE	AUTH.
R06	FIGURES UPDATED	21291	DR	24/07/17	AN
R05	DESIGN SPECIFICATION ADDED	18445	MJ	18/09/15	PB
R04	BYPASS LINE REMOVED	17321	JR	22/12/14	SC
R00	ISSUED FOR MANUFACTURE		GC	11/12/08	RTW

THIRD ANGLE PROJECTION

DO NOT SCALE DRAWING

JFD OWNS THE COPYRIGHT OF THIS DOCUMENT AND ANY DESIGN RIGHT HEREIN. IT IS SUPPLIED IN CONFIDENCE AND MUST NOT BE USED FOR ANY PURPOSE OTHER THAN THAT FOR WHICH IT IS SUPPLIED AND MUST NOT BE REPRODUCED WITHOUT PERMISSION IN WRITING FROM THE OWNERS.

TITLE: PROCESS AND INSTRUMENTATION DIAGRAM, HP GAS SYSTEM, REPROCESSING UNIT

DRAWING NO.: P1805903S1 | REV: R06

PART NO.: B15730 | PRODUCT / PROJECT No.: GASMIZER

SIZE: A2 | SCALE (UOS): NTS | SHEET: 1 OF 1

JFD WESTHILL
ENTERPRISE DRIVE,
WESTHILL, ABERDEEN,
AB32 6TQ, UK

TEL: +44 (0)1224 740145
E: enquiries@jfdglobal.com
W: jfdglobal.com

LP Gas System Schematic P180524S1

ITEM No	PART No.	DESCRIPTION	QTY.	MATERIAL.	M.A.W.P.	
1	C1221C	BPR ASSEMBLY	1	SEE B81221S1	SEE B81221S1	SEE NOTE 1
2	C1306A	FLOAT/CHECK VALVE ASSEMBLY	1	SEE P180581306S1	SEE P180581306S1	SEE NOTE 1 & 3
3	C2277	FILTER HOUSING ASSEMBLY (LONG)	1	SEE P180542S1	SEE P180542S1	SEE NOTE 1
4	FE002	1 MICRON FILTER ELEMENT	1	-	-	
5	C1143	FILTER HOUSING ASSEMBLY (SHORT)	1	SEE P180541S1	SEE P180541S1	SEE NOTE 1
6	FE003	0.01 MICRON FILTER ELEMENT	1	ALUMINIUM ALLOY	200 bar	
7	DM23620	FLOW SWITCH	1	SEE 82362S1	1500 psi	
8	MC046	RECEIVER BOTTLE	2	-	200 bar	
9	DM1308	RECEIVER ADAPTOR	2	SEE B81308S1	SEE B81308S1	SEE NOTE 1
10	GP252	PRESSURE GAUGE, 0-1000 PSI, 1/4" NPT(M) BTM ENTRY	3	-	1000 psi	
11	DM13550	BALL VALVE, 3/4" NPT(F)	2	316 ST ST	70 bar	
12	VS201	SHUT-OFF VALVE, 1/4" NPT(M)	5	BRASS	161 bar	
13	VR293	RELIEF VALVE, 1/4" TUBE - 1/4" NPT, 1100 PSI	1	ST ST	384 bar	SEE NOTE 2 △1
14	VM029	SPRING FOR NUPRO RELIEF VALVE, 750-1500 PSI	1	-	-	△1
15	VC202	VALVE, CHECK, 1/4" FNPT	1	BRASS	207 bar	△1
16	NP604	RED NIPPLE, 3/4" NPT - 1/2" NPT(M)	3	PLATED BRASS	241 bar	
17	TM698	TUBE, SEAMLESS, 3/4" O/D. X 0.065" W/T.	AS REQ.	316 ST ST	225 bar	
18	NP601	STREET ELBOW, 3/4" NPT(F) - 3/4" NPT(M)	2	PLATED BRASS	131 bar	△1
19	FS697	ELBOW CONNECTOR, 3/4" TUBE - 1/2" NPT(M)	5	ST ST	400 bar	△1
20	FP289	MALE BRANCH TEE, 1/4" NPT(F) - 1/4" NPT(M)	1	ST ST	386 bar	△1
21	NP204	STREET ELBOW, 1/4" NPT(F) - 1/4" NPT(M)	3	PLATED BRASS	220 bar	
22	FS688	MALE CONNECTOR, 3/4" TUBE - 1/2" NPT(M)	2	ST ST	400 bar	△1
23	NP602	NIPPLE, 3/4" NPT(M)	1	PLATED BRASS	241 bar	
24	DM1610	MALE ELBOW (MODIFIED FS698)	1	ST ST	400 bar	△1
25	FP205	MALE ELBOW, 1/4" NPT(M)	1	BRASS	269 bar	△1

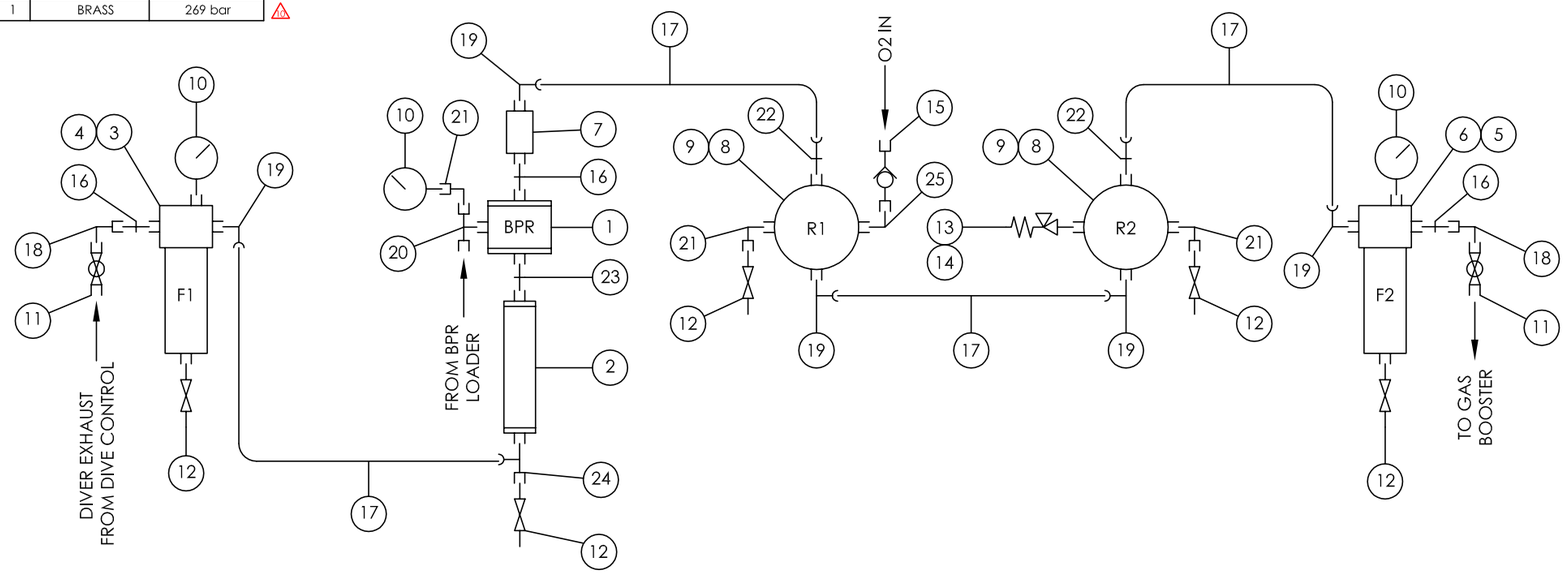

NOTES:

1. THESE ITEMS ARE PRESSURE VESSELS DESIGNED AND TESTED IN ACCORDANCE WITH PD5500:2018
2. RELIEF VALVE TO BE SET PRIOR TO INSTALLATION IN ACCORDANCE WITH GEN-WP-021. SEE RELEVANT ASSEMBLY, INSPECTION AND TEST PLAN.
3. ITEM 2 TO BE INSTALLED AS A FLOAT VALVE WITH GAS FLOW FROM THE BOTTOM

MATERIAL N/A

FINISH N/A

ALL DIMENSIONS ARE IN mm (UOS)
ALL DIMENSIONS BEFORE PLATING (UOS)
REMOVE ALL SHARP EDGES AND BURRS

MACHINING TOLERANCE		FABRICATION TOLERANCE	
NO DECIMAL PLACE	±1.0	>0 <100	±0.5
ONE DECIMAL PLACE	±0.2	>100 <500	±1.5
TWO DECIMAL PLACE	±0.05	>500	±3.0
ANGULAR TOLERANCE	±0.5°		

△1 DENOTES CHANGES MADE AT THIS REVISION

REV	DESCRIPTION	ECN	BY	DATE	AUTH.
R10	PRESSURES & PART NUMBERS UPDATED ON BoM	24526	SR	05/12/19	AB
R09	NOTE 3 ADDED	23343	SD	18/03/19	AN
R08	NOTES UPDATED	18445	JR	02/10/15	PB
R10	ISSUED FOR MANUFACTURE	X	-	-	-

THIRD ANGLE PROJECTION

DO NOT SCALE DRAWING

JFD OWNS THE COPYRIGHT OF THIS DOCUMENT AND ANY DESIGN RIGHT HEREIN. IT IS SUPPLIED IN CONFIDENCE AND MUST NOT BE USED FOR ANY PURPOSE OTHER THAN THAT FOR WHICH IT IS SUPPLIED AND MUST NOT BE REPRODUCED WITHOUT PERMISSION IN WRITING FROM THE OWNERS.

TITLE: LP GAS SYSTEM SCHEMATIC

DRAWING NO. P180524S1 REV R10

PART NO. B15730 PRODUCT / PROJECT No. GASMIZER

SIZE A2 SCALE (UOS) NTS SHEET 1 OF 1

JFD WESTHILL
ENTERPRISE DRIVE,
WESTHILL, ABERDEEN,
AB32 6TQ, UK

TEL: +44 (0)1224 740145
E: enquiries@jfdglobal.com
W: jfdglobal.com

HP Gas System Schematic P180525S1

ITEM	DESCRIPTION	QTY.	PART No.	MATERIAL	M.A.W.P.	
1	SCRUBBER HOUSING ASSEMBLY (1500 P.S.I.)	2	C1116G	SEE C81115S1	SEE C81115S1	SEE NOTE 1
2	FILTER HOUSING, SHORT, ASSY, 1500PSI	1	C1143	SEE P180541S1	SEE P180541S1	SEE NOTE 1
3	FILTER, ELEMENT, 1 MICRON	1	FE002	-	-	
4	HEAT EXCHANGER,GASMIZER TOPSIDE REPROCESSING UNIT	1	DM613E	SEE B81613S1	SEE B81613S1	SEE NOTE 1
5	REGULATOR, PRESSURE, 0-25 PSI	1	RP201	BRASS	205 bar (INLET)	
6	GAUGE,PRESSURE 1/4", BOTTOM ENTRY, 2.5"/0-2000 PSI	2	GP226	SS	2000 psi	
7	VALVE, BALL, ASSY, 3/8"FNPT	6	DM13540	316SS	206 bar	
8	VALVE, SHUT OFF, 1/4" MNPT	4	VS201	BRASS	161 bar	
9	TEE ,RUN, (M), 1/2"TUBE-3/8"MNPT, ST.ST.	1	FS495	316SS	530 bar	
10	ELBOW, MALE, 3/8"MNPT	4	FP394	316SS	496 bar	
11	CONNECTOR, (M), 1/2"TUBE-3/8"MNPT ,ST.ST.	2	FS499	316SS	220 bar	
12	FTG, UNION ELBOW, 1/2"TUBE	2	FS492	316SS	220 bar	
13	TEE, STREET, 3/8"M-F-FNPT, E/LESS NICKEL PLATE	3	NP313	NP BRASS	207 bar	
14	ELBOW, STREET, 3/8" NPT M/F, SS, WP386BAR	2	FP392	316SS	386 bar	
15	NIPPLE, 3/8" (M) NPT X 3/8" (M) NPT, SS	1	FP398	316SS	496 bar	
16	FTG, ELBOW, MALE, 1/2"TUBE-1/2"MNPT	1	FS496	316SS	220 bar	
17	NIPPLE, HEX, 1/2"(M)NPT-3/8"(M)NPT, ST.ST.	1	FP499	316SS	455 bar	
18	TEE, MALE RUN, 1/4" NPT F-M-F, SS, WP 390BAR	1	FP295	316SS	390 bar	
19	FTG, CONNECTOR,FEMALE, 1/4"TUBE-1/4"FNPT	1	FS298	316SS	350 bar	
20	FTG, CONNECTOR, MALE, 1/4"TUBE-1/4"MNPT	2	FS299	316SS	350 bar	
21	PLUG, HEX HEAD, 1/4"MNPT, SS, WP551BAR	2	FP290	316SS	551 bar	
22	TUBE, STAINLESS STEEL, SEAMLESS, 1/2" OD X 0.049	12 FT	TM497	316SS	255 bar	
23	ADAPTOR, 1/4"FNPT-1/4"MNPT, ST.ST.	2	FP297	316SS	455 bar	
24	VALVE, RELIEF, NUPRO R3A, 1/4"NPTM, 1/4" TUBE	1	VR293	316SS	338 bar	SEE NOTE 2
25	SPRING, RELIEF VALVE, 1500-2250 PSI	1	VM043	-	-	
26	FTG, ELBOW,MALE, 1/2"TUBE-3/8"MNPT	1	FS497	316SS	255 bar	
27	REDUCER, PIPE THREAD, 3/8"MNPT-1/4"FNPT	2	FP389	316SS	365 bar	
28	TUBE, STAINLESS STEEL, SEAMLESS, 1/4"OD X 0.036"	1 FT	TM296	316SS	380 bar	
29	CANISTER ASSEMBLY, WITH REMOVEABLE END	2	C1638B	SEE B81638S1	-	
30	ELBOW, STREET, 1/4"FNPT-1/4"MNPT	1	FP296	316SS	496 bar	

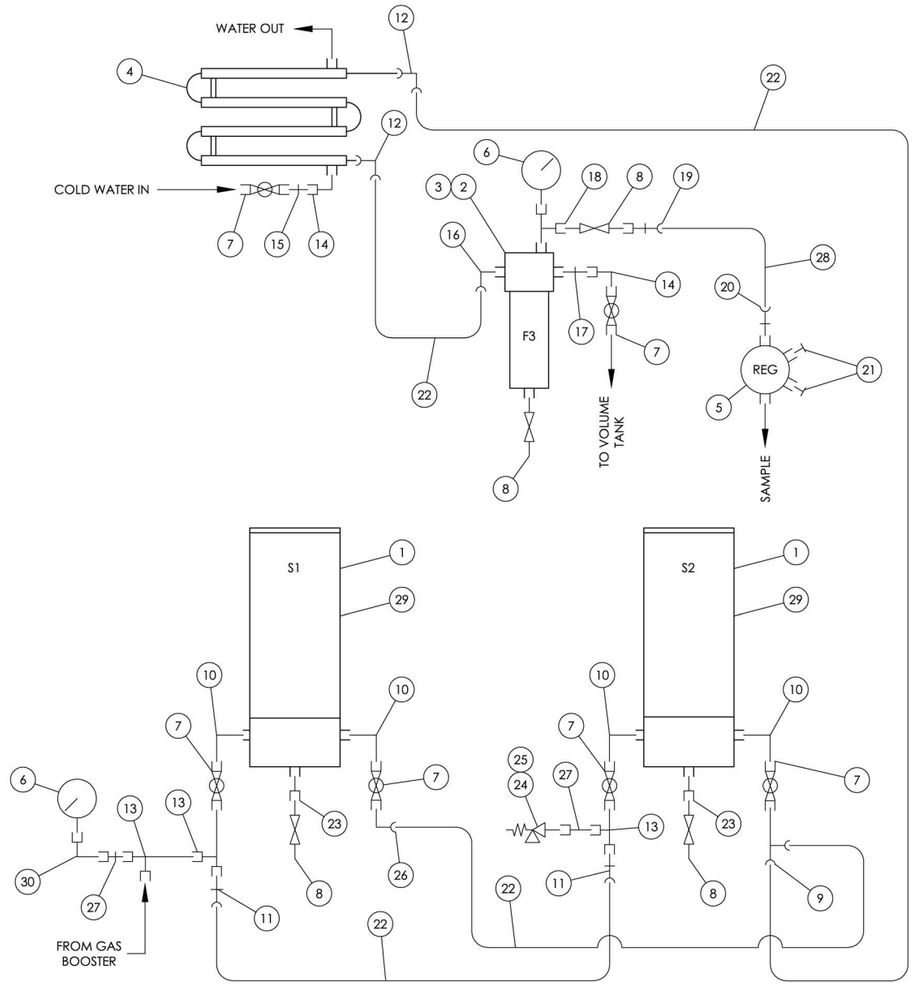

NOTES:

1. THESE ITEMS ARE PRESSURE VESSELS DESIGNED AND TESTED IN ACCORDANCE WITH PD5500:2015
2. RELIEF VALVE TO BE SET PRIOR TO INSTALLATION IN ACCORDANCE WITH GEN-WP-021. SEE RELEVANT ASSEMBLY, INSPECTION AND TEST PLAN.

MATERIAL: SEE PARTS LIST

FINISH: N/A

ALL DIMENSIONS ARE IN mm (UOS)
ALL DIMENSIONS BEFORE PLATING (UOS)
REMOVE ALL SHARP EDGES AND BURRS

MACHINING TOLERANCE		FABRICATION TOLERANCE	
NO DECIMAL PLACE	±1/16"	SIZE >8'100<4"	±0.025
ONE DECIMAL PLACE	±0.05"	SIZE 0<4'500<20"	±0.045
TWO DECIMAL PLACE	±0.015"	SIZE 0>20"	±0.120
THREE DECIMAL PLACE	±0.005"	ANGULAR TOLERANCE	±0.5°

DENOTES CHANGES MADE AT THIS REVISION

REV	DESCRIPTION	ECN	BY	DATE	AUTH.
R21	TEXT REMOVED	21291	DR	25/07/17	AN
R20	NOTES ADDED AND BOM UPDATED	18445	JR	02/10/15	PB
R19	TEST PRESSURE AMENDED & MATERIALS ADDED	17528	AN	20/02/15	SC
R00	ISSUED FOR MANUFACTURE		-	24/07/90	-

THIRD ANGLE PROJECTION

DO NOT SCALE DRAWING

JFD OWNS THE COPYRIGHT OF THIS DOCUMENT AND ANY DESIGN RIGHT HEREIN. IT IS SUPPLIED IN CONFIDENCE AND MUST NOT BE USED FOR ANY PURPOSE OTHER THAN THAT FOR WHICH IT IS SUPPLIED AND MUST NOT BE REPRODUCED WITHOUT PERMISSION IN WRITING FROM THE OWNERS.

TITLE: SCHEMATIC, HP GAS SYSTEM

DRAWING NO.: P180525S1 | REV: R21

PART NO.: B15730 | PRODUCT / PROJECT No.: GASMIZER

SIZE: A2 | SCALE (UOS): NTS | SHEET: 1 OF 1

JFD WESTHILL
ENTERPRISE DRIVE,
WESTHILL, ABERDEEN,
AB32 6TQ, UK

TEL: +44 (0)1224 740145
E: enquiries@jfdglobal.com
W: jfdglobal.com

Filter Housing, Long, Assy P180542S1

ITEM NO.	PART NO.	DESCRIPTION	QTY.
1	DM2277	FILTER HSNG,LONG,S/ASSY, 1500 PSI	1
2	F1290	ROD, FILTER SUPPORT, 3000 PSI	1
3	RN229-7	O-RING	1
4	RN232-7	O-RING	1

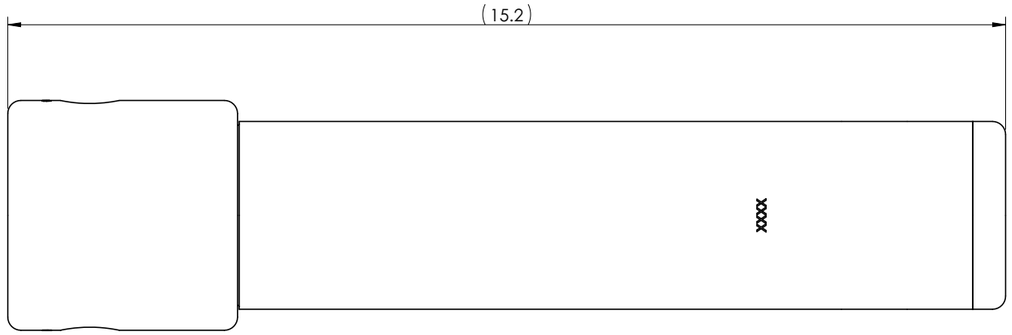

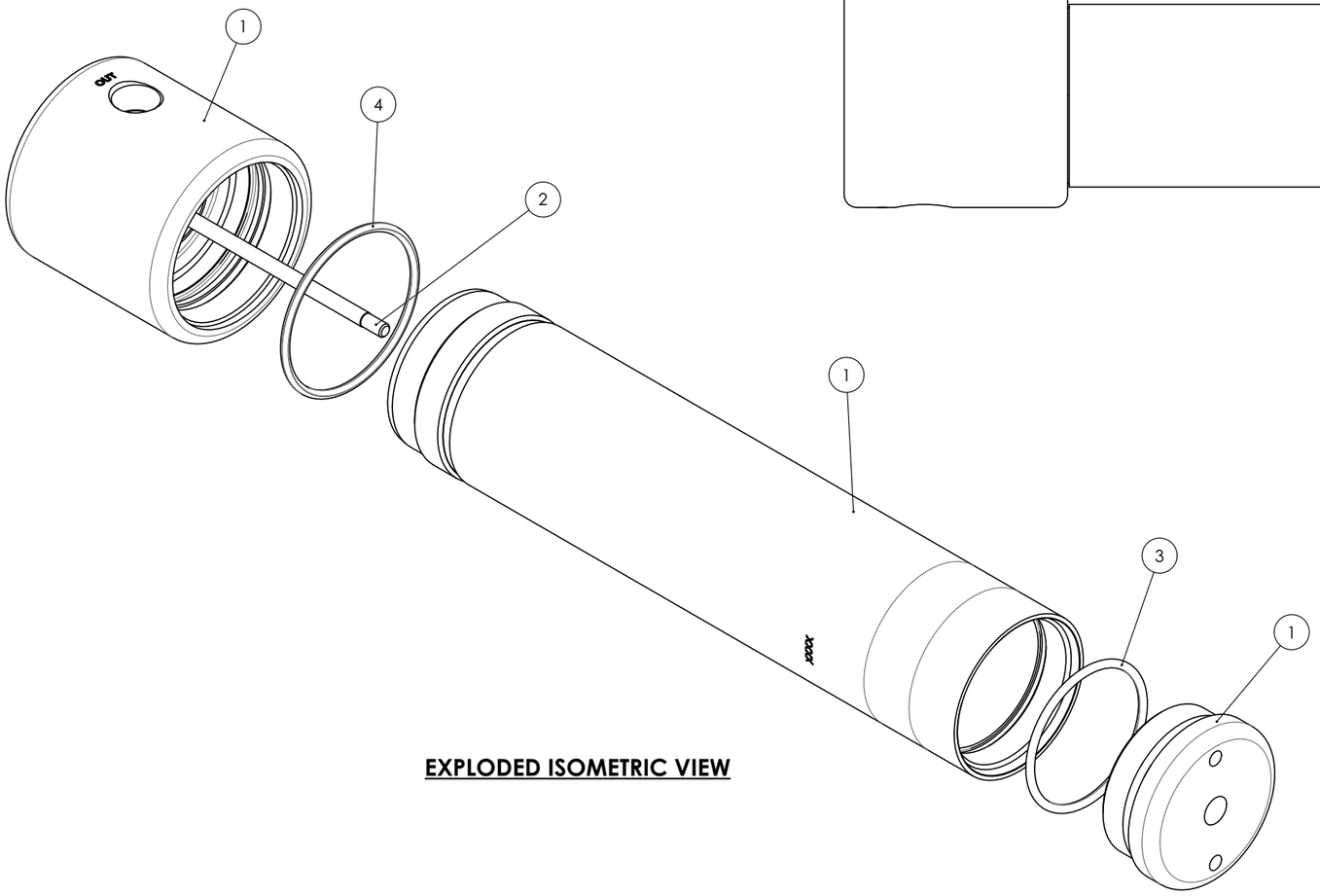

EXPLODED ISOMETRIC VIEW

NOTES:

DESIGN SPECIFICATION: 5

MAX WORKING PRESSURE: 1500PSI
DESIGN PRESSURE: 1650PSI
DESIGN TEMPERATURE: +55°C
HYDRO-TEST PRESSURE: 2200PSI
CORROSION ALLOWANCE: NONE

MATERIAL: SEE PARTS LIST

FINISH: N/A

ALL DIMENSIONS ARE IN mm (UOS)
ALL DIMENSIONS BEFORE PLATING (UOS)
REMOVE ALL SHARP EDGES AND BURRS

MACHINING TOLERANCE		FABRICATION TOLERANCE	
NO DECIMAL PLACE	±1.0	>0 <100	±0.5
ONE DECIMAL PLACE	±0.2	>100 <500	±1.5
TWO DECIMAL PLACE	±0.05	>500	±3.0
ANGULAR TOLERANCE	±0.5°		

5 DENOTES CHANGES MADE AT THIS REVISION

REV	DESCRIPTION	ECN	BY	DATE	AUTH.
R05	DESIGN CODE REMOVED	27927	JR	15/09/21	AB
R04	DESIGN SPEC. UPDATED	18475	MJ	23/09/15	PB
R03	TEST PRESSURE AMENDED	17528	AN	20/02/15	SC
R00	ISSUED FOR MANUFACTURE				

THIRD ANGLE PROJECTION

DO NOT SCALE DRAWING

JFD OWNS THE COPYRIGHT OF THIS DOCUMENT AND ANY DESIGN RIGHT HEREIN. IT IS SUPPLIED IN CONFIDENCE AND MUST NOT BE USED FOR ANY PURPOSE OTHER THAN THAT FOR WHICH IT IS SUPPLIED AND MUST NOT BE REPRODUCED WITHOUT PERMISSION IN WRITING FROM THE OWNERS.

TITLE: **FILTER HOUSING,LONG, ASSY**

DRAWING NO.: **P180542S1** REV: **R05**

PART NO.: C2277 PRODUCT / PROJECT No.: GASMIZER

SIZE: A3 SCALE (UOS): 1:2 SHEET: 1 OF 1

JFD WESTHILL
ENTERPRISE DRIVE,
WESTHILL, ABERDEEN,
AB32 6TQ, UK

TEL: +44 (0)1224 740145
E: enquiries@jfdglobal.com
W: jfdglobal.com

Filter Housing, Short, Assy P180541R4

ITEM NO.	PART NO.	DESCRIPTION	QTY.
1	DM1143	FILTER HOUSING,SHORT,S/ASSY,1500 PSI	1
2	F1290	ROD, FILTER SUPPORT, 3000 PSI	1
3	RN229-7	O-RING	1
4	RN232-7	O-RING	1

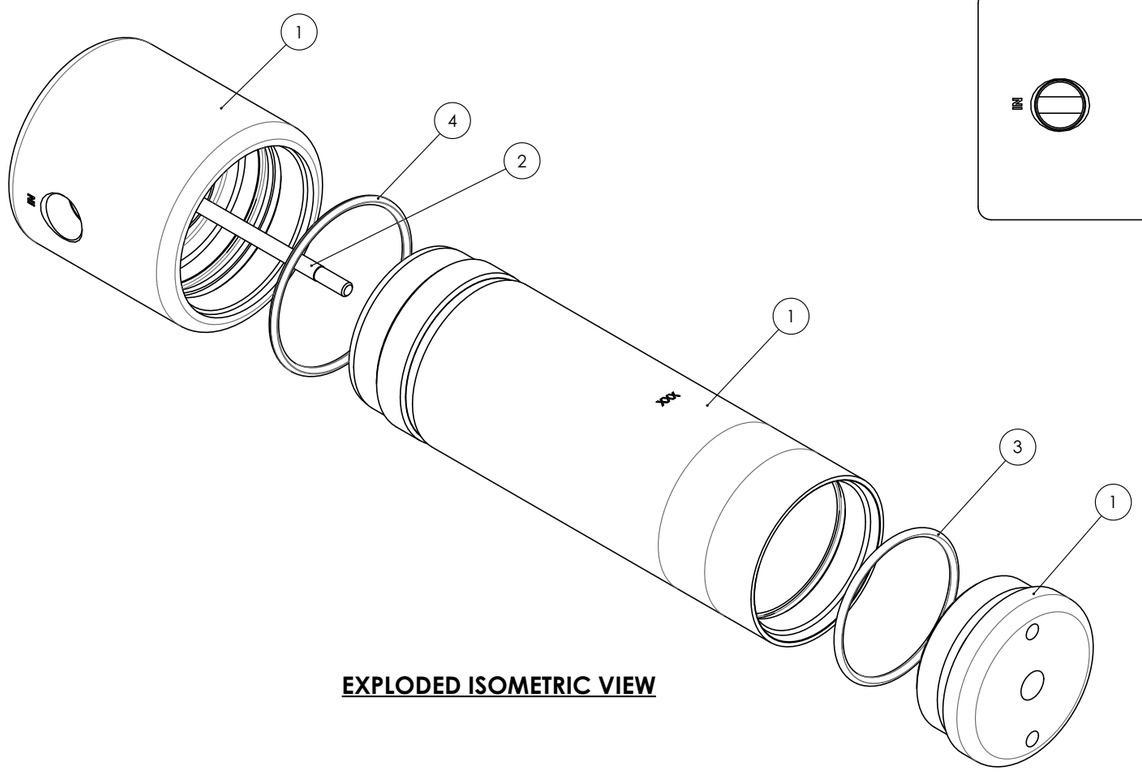

EXPLODED ISOMETRIC VIEW

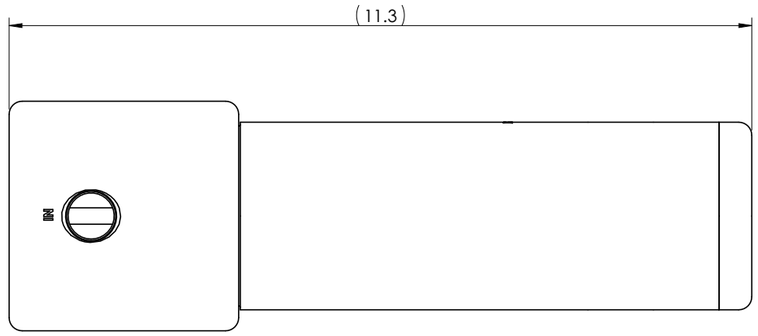

NOTES:

DESIGN SPECIFICATION: 5

MAX WORKING PRESSURE: 1500PSI
DESIGN PRESSURE: 1650PSI
DESIGN TEMPERATURE: +55°C
HYDRO-TEST PRESSURE: 2200PSI
CORROSION ALLOWANCE: NONE

MATERIAL SEE PARTS LIST

FINISH N/A

ALL DIMENSIONS ARE IN mm (UOS)
ALL DIMENSIONS BEFORE PLATING (UOS)
REMOVE ALL SHARP EDGES AND BURRS

MACHINING TOLERANCE		FABRICATION TOLERANCE	
NO DECIMAL PLACE	±1.0	>0 <100	±0.5
ONE DECIMAL PLACE	±0.2	>100 <500	±1.5
TWO DECIMAL PLACE	±0.05	>500	±3.0
ANGULAR TOLERANCE	±0.5°		

5 DENOTES CHANGES MADE AT THIS REVISION

REV	DESCRIPTION	ECN	BY	DATE	AUTH.
R05	DESIGN CODE REMOVED	27924	JR	15/09/21	AB
R04	DESIGN SPEC. UPDATED	18474	MJ	23/09/15	PB
R03	TEST PRESSURE AMENDED	17528	AN	20/02/15	SC
R00	ISSUED FOR MANUFACTURE				

THIRD ANGLE PROJECTION

DO NOT SCALE DRAWING

JFD OWNS THE COPYRIGHT OF THIS DOCUMENT AND ANY DESIGN RIGHT HEREIN. IT IS SUPPLIED IN CONFIDENCE AND MUST NOT BE USED FOR ANY PURPOSE OTHER THAN THAT FOR WHICH IT IS SUPPLIED AND MUST NOT BE REPRODUCED WITHOUT PERMISSION IN WRITING FROM THE OWNERS.

TITLE **FILTER HOUSING,SHORT, ASSY**

DRAWING NO. **P180541S1** REV **R05**

PART NO. C1143 PRODUCT / PROJECT No. GASMIZER

SIZE A3 SCALE (UOS) 1:2 SHEET 1 OF 1

JFD WESTHILL
ENTERPRISE DRIVE,
WESTHILL, ABERDEEN,
AB32 6TQ, UK

TEL: +44 (0)1224 740145
E: enquiries@jfdglobal.com
W: jfdglobal.com

Scrubber Housing Assembly C81115S1

ITEM NO.	PART NO.	DESCRIPTION	QTY.
1	DM116E	SCRUBBER HOUSING S/ASSY	1
2	RN019-7	O-RING	1
3	RN343-7	O-RING	1
4	RN341-7	O-RING	1
5	FB029	SCREW, CAP, SCKT, 1/4"UNC X 3/8"	2

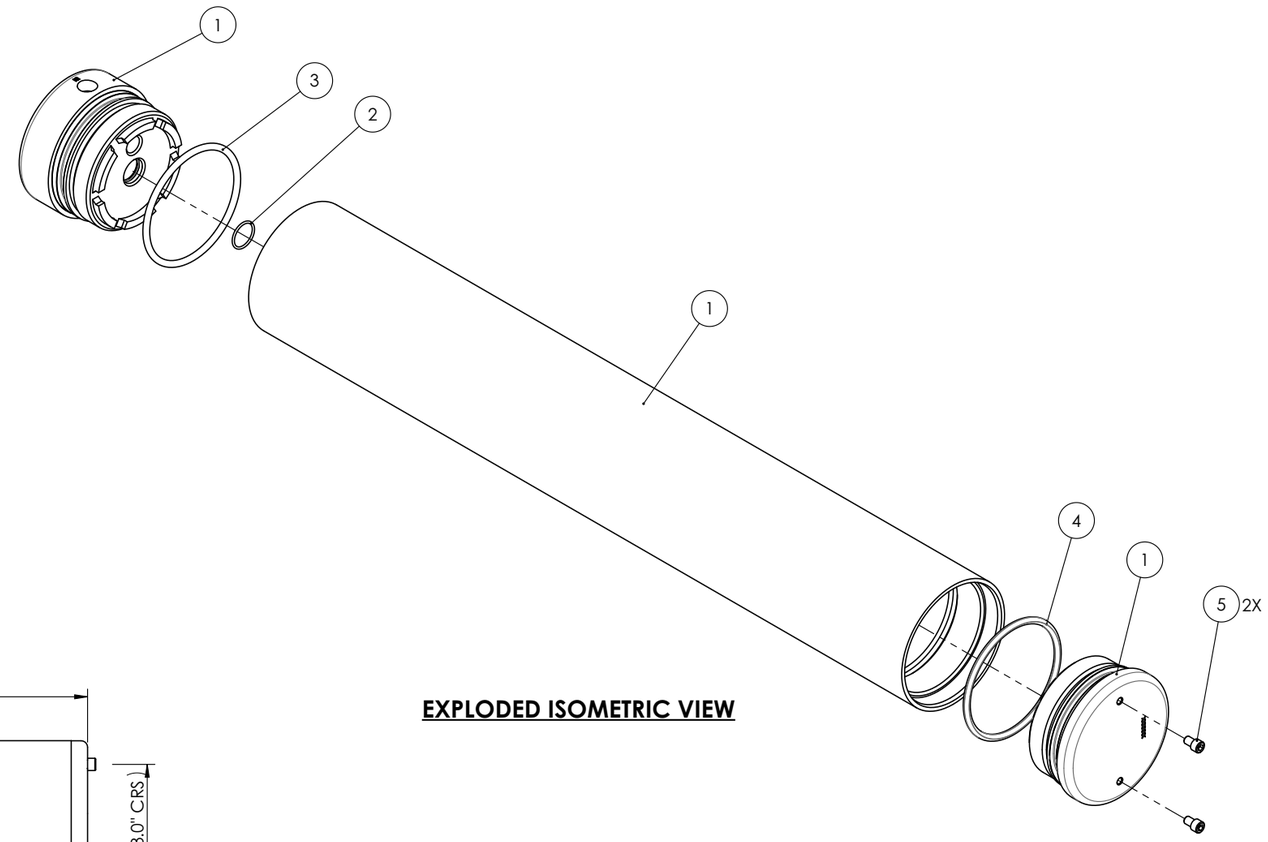

EXPLODED ISOMETRIC VIEW

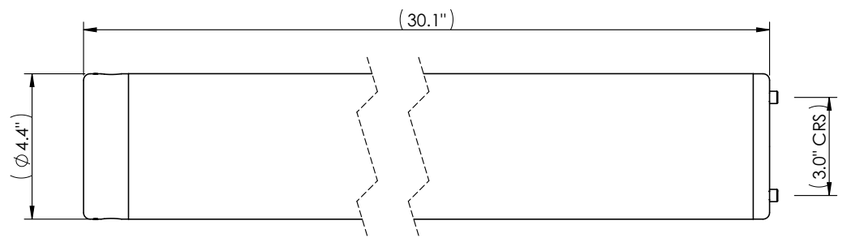

NOTES:

DESIGN SPECIFICATION: 3

MAX WORKING PRESSURE: 1500PSI
DESIGN PRESSURE: 1650PSI
DESIGN TEMPERATURE: +55°C
HYDRO-TEST PRESSURE: 2200PSI
CORROSION ALLOWANCE: NONE

MATERIAL: SEE PARTS LIST

FINISH: N/A

ALL DIMENSIONS ARE IN INCHES (UOS)
ALL DIMENSIONS BEFORE PLATING (UOS)
REMOVE ALL SHARP EDGES AND BURRS

MACHINING TOLERANCE		FABRICATION TOLERANCE	
NO DECIMAL PLACE	±1/16"	SIZE >0" <4"	±0.02"
ONE DECIMAL PLACE	±0.05"	SIZE >4" <20"	±0.06"
TWO DECIMAL PLACE	±0.01"	SIZE >20"	±0.12"
THREE DECIMAL PLACE	±0.002"	ANGULAR TOLERANCE	±0.5°

3 DENOTES CHANGES MADE AT THIS REVISION

REV	DESCRIPTION	ECN	BY	DATE	AUTH.
R03	DESIGN CODE REMOVED	27923	JR	14/09/21	AB
R02	DESIGN SPEC. UPDATED	18473	MJ	24/09/15	PB
R01	NOTES UPDATED	17559	MJ	03/03/15	SC
R00	ISSUED FOR MANUFACTURE		KB	30/11/06	RTW

THIRD ANGLE PROJECTION

DO NOT SCALE DRAWING

JFD OWNS THE COPYRIGHT OF THIS DOCUMENT AND ANY DESIGN RIGHT HEREIN. IT IS SUPPLIED IN CONFIDENCE AND MUST NOT BE USED FOR ANY PURPOSE OTHER THAN THAT FOR WHICH IT IS SUPPLIED AND MUST NOT BE REPRODUCED WITHOUT PERMISSION IN WRITING FROM THE OWNERS.

TITLE: **SCRUBBER HOUSING ASSEMBLY**

DRAWING NO.: **C81115S1** REV: **R03**

PART NO.: C1116G PRODUCT / PROJECT No.: ELECTRIC GASMIZER

SIZE: A3 SCALE (UOS): 1:4 SHEET: 1 OF 1

JFD WESTHILL
ENTERPRISE DRIVE,
WESTHILL, ABERDEEN,
AB32 6TQ. UK

TEL: +44 (0)1224 740145
E: enquiries@jfdglobal.com
W: jfdglobal.com

Canister Assembly with Removable End B81638S1

ITEM No.	PART No.	DESCRIPTION	Qty.
1	F637B	BODY, SCRUBBER CANISTER	1
2	F634E	CAP, REMOVEABLE, SCRUBBER CANISTER	1
3	RN039-7	O-RING	1
4	F2242B	NOZZLE, END CAP, SCRUBBER CANISTER	1
5	FB028	SCREW, PAN HD, 6UNC x 3/8", ST/ST	5
6	F2950	CAP, TOP, SCRUBBER CANISTER	1
7	F4350	HANDLE, SCRUBBER CANISTER	1
8	FE004	ELEMENT, 1 MICRON, 3" FILTER PAD	2
9	FE005	SUPPORT, ELEMENT	1
10	F4460	SCREEN, FILTER	1
11	F3920	CAP, BOTTOM, SCRUBBER CANISTER	1

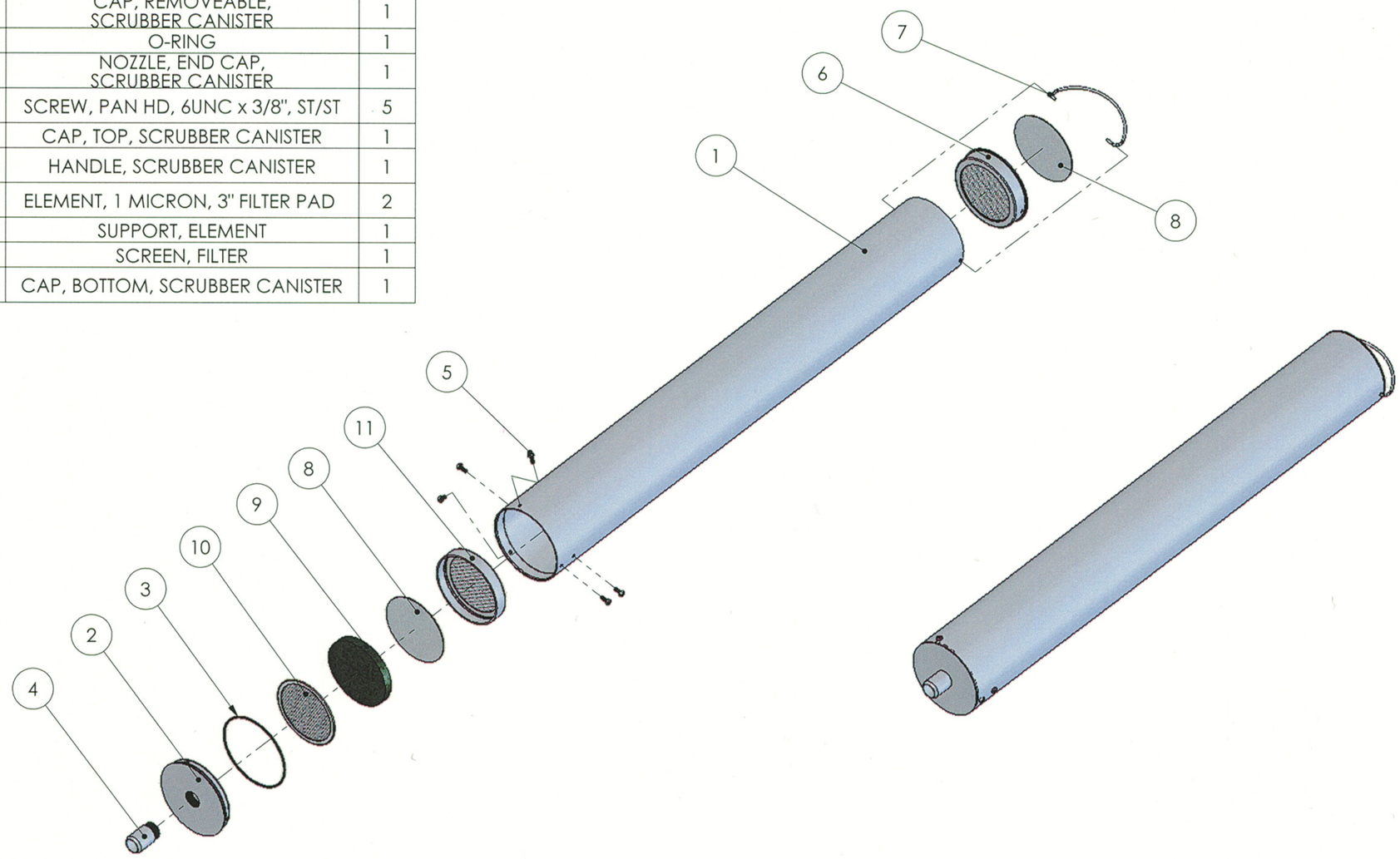

NOTES :

REV	DESCRIPTION OF REVISION	ECN
R03	REDRAWN IN SOLID WORKS	8999

MATERIAL: SEE PARTS LIST

FINISH: -

DIVEX OWNS THE COPYRIGHT OF THIS DOCUMENT AND ANY DESIGN RIGHT EMBODIED HEREIN. IT IS SUPPLIED IN CONFIDENCE AND MUST NOT BE USED FOR ANY PURPOSE OTHER THAN THAT FOR WHICH IT IS SUPPLIED AND MUST NOT BE REPRODUCED WITHOUT PERMISSION IN WRITING FROM THE OWNERS

DIVEX
DIVEX LIMITED
ENTERPRISE DRIVE
WESTHILL
ABERDEEN. AB32 6TQ
UNITED KINGDOM.
TEL : +44 (0)1224 740145
FAX : +44 (0)1224 740172
email : info@divex.co.uk
www.divex.co.uk

A3

ALL DIMENSIONS IN MM (UOS)
ALL DIMENSIONS BEFORE PLATING (UOS)
REMOVE SHARP EDGES & BURRS
DIMENSIONAL TOLERANCES:
NO DECIMAL PLACES ±1.0
ONE DECIMAL PLACE ±0.2
TWO DECIMAL PLACES ±0.05
ANGULAR TOLERANCE ±0.5°

SCALE 1 : 5
PRODUCT GASMIZER
PART No. C1638B
DRAWN BY M.McCaskill
DATE 22/02/2007

TITLE
CANISTER ASSEMBLY, WITH REMOVEABLE END

DRG No. 81638S1
SHEET 1 of 1
REV R03

3RD ANGLE PROJECTION

DO NOT SCALE DRAWING

Receiver Adaptor Assembly B81308

Sheet 1 of 3

ITEM NO.	PART NO.	DESCRIPTION	QTY.
1	M1270	RECEIVER ADAPTOR	1
2	M459	DIMPLE TUBE	1
3	TM698	TUBE,SEAMLESS, 3/4"OD X .064 WT, SS316 CUT LENGTH 965mm	1
4	RN784-7	O-RING	1
5	FB048	SCREW, SOCKET SET, FLAT BOTTOM, 1/4" BSF X 3/8"	3

- SEE NOTES 1 & 2

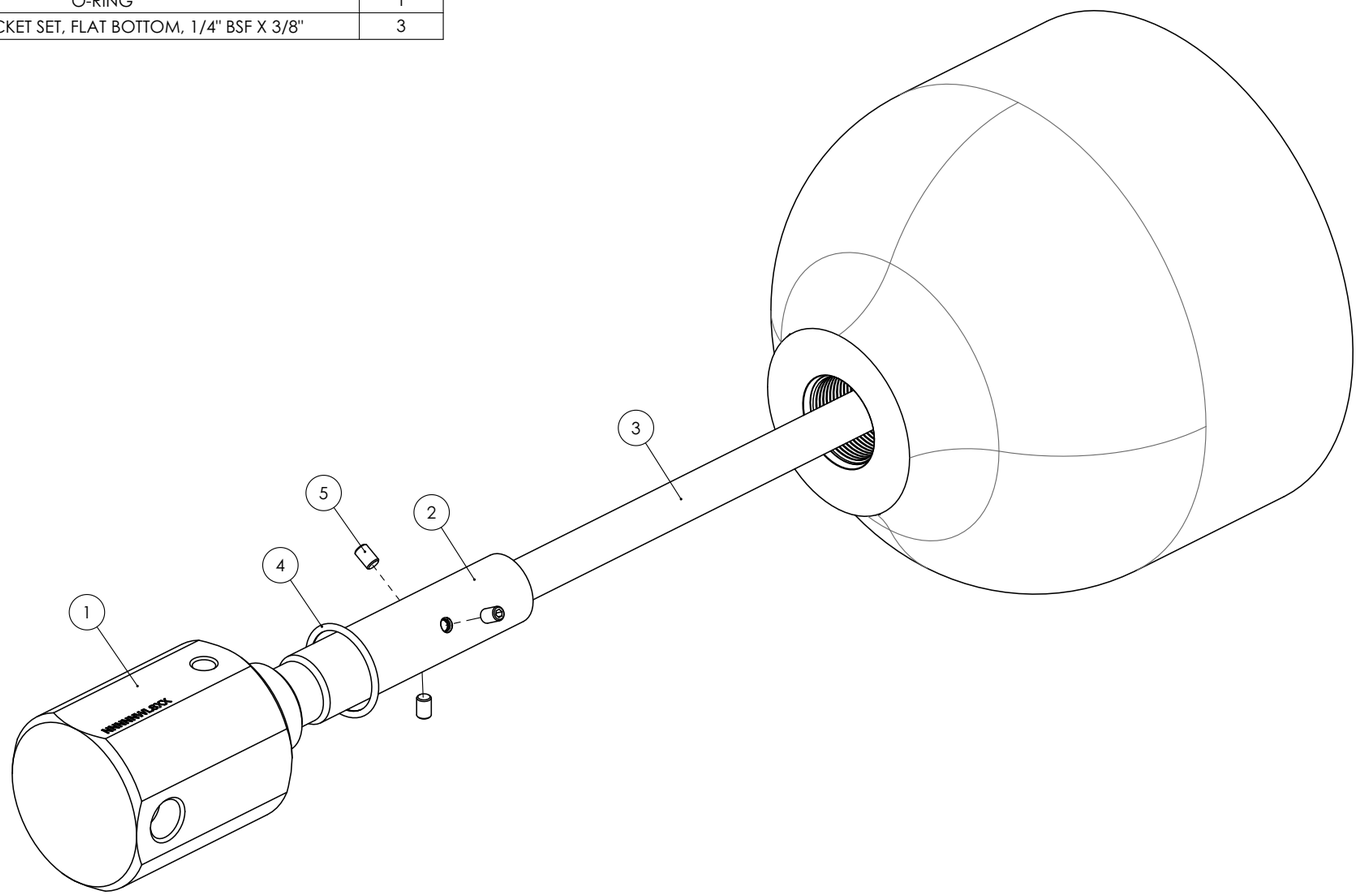

NOTES:

1. WORKING PRESSURE = 1000 psi (8)
   DESIGN PRESSURE = 1100 psi
   DESIGN TEMP. = +55°C
   HYDRO-TEST PRESSURE = 1450 psi
   CORROSION ALLOWANCE = NONE
2. ELECTROLESS NICKEL PLATE 12-15µm THICK.

MATERIAL: SEE PARTS LIST

FINISH: N/A

ALL DIMENSIONS ARE IN mm (UOS)
ALL DIMENSIONS BEFORE PLATING (UOS)
REMOVE ALL SHARP EDGES AND BURRS

MACHINING TOLERANCE		FABRICATION TOLERANCE	
NO DECIMAL PLACE	±1.0	>0 <100	±0.5
ONE DECIMAL PLACE	±0.2	>100 <500	±1.5
TWO DECIMAL PLACE	±0.05	>500	±3.0
ANGULAR TOLERANCE	±0.5°		

(8) DENOTES CHANGES MADE AT THIS REVISION

REV	DESCRIPTION	ECN	BY	DATE	AUTH.
R08	DESIGN CODE REMOVED	27929	JR	16/09/21	AB
R07	NOTES ADDED & SEE SHEET 3	18472	JR	30/09/15	PB
R06	REDRAWN TO SOLIDWORKS	5585	GC	24/03/05	RTW
R00	ISSUED FOR MANUFACTURE		EB	31/08/82	JB

THIRD ANGLE PROJECTION

DO NOT SCALE DRAWING

JFD OWNS THE COPYRIGHT OF THIS DOCUMENT AND ANY DESIGN RIGHT HEREIN. IT IS SUPPLIED IN CONFIDENCE AND MUST NOT BE USED FOR ANY PURPOSE OTHER THAN THAT FOR WHICH IT IS SUPPLIED AND MUST NOT BE REPRODUCED WITHOUT PERMISSION IN WRITING FROM THE OWNERS.

TITLE: **RECEIVER ADAPTOR ASSEMBLY**

DRAWING NO.: **B81308S1** REV: **R08**

PART NO.: DM1308 PRODUCT / PROJECT No.: GASMIZER

SIZE: A3 SCALE (UOS): 1:10 SHEET: 1 OF 3

JFD WESTHILL
ENTERPRISE DRIVE,
WESTHILL, ABERDEEN,
AB32 6TQ, UK

TEL: +44 (0)1224 740145
E: enquiries@jfdglobal.com
W: jfdglobal.com

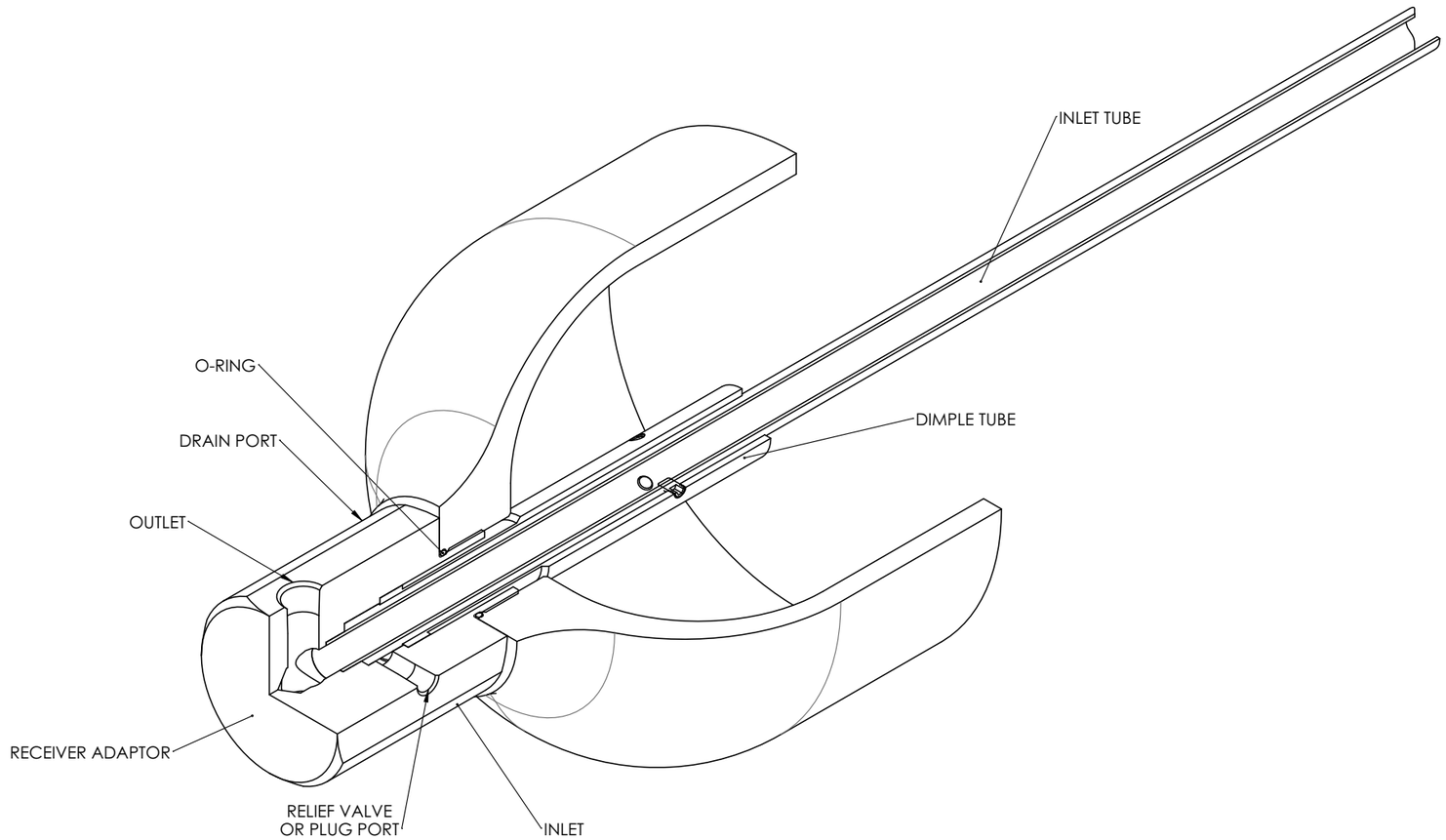

NOTES:

MATERIAL SEE PARTS LIST

FINISH N/A

ALL DIMENSIONS ARE IN mm (UOS)
ALL DIMENSIONS BEFORE PLATING (UOS)
REMOVE ALL SHARP EDGES AND BURRS

MACHINING TOLERANCE		FABRICATION TOLERANCE	
NO DECIMAL PLACE	±1.0	>0 <100	±0.5
ONE DECIMAL PLACE	±0.2	>100 <500	±1.5
TWO DECIMAL PLACE	±0.05	>500	±3.0
ANGULAR TOLERANCE	±0.5°		

8 DENOTES CHANGES MADE AT THIS REVISION

REV	DESCRIPTION	ECN	BY	DATE	AUTH.
R08	DESIGN CODE REMOVED	27929	JR	16/09/21	AB
R07	NOTES ADDED & SEE SHEET 3	18472	JR	30/09/15	PB
R06	REDRAWN TO SOLIDWORKS	5585	GC	24/03/05	RTW
R00	ISSUED FOR MANUFACTURE		EB	31/08/82	JB

THIRD ANGLE PROJECTION

DO NOT SCALE DRAWING

JFD OWNS THE COPYRIGHT OF THIS DOCUMENT AND ANY DESIGN RIGHT HEREIN. IT IS SUPPLIED IN CONFIDENCE AND MUST NOT BE USED FOR ANY PURPOSE OTHER THAN THAT FOR WHICH IT IS SUPPLIED AND MUST NOT BE REPRODUCED WITHOUT PERMISSION IN WRITING FROM THE OWNERS.

TITLE
RECEIVER ADAPTOR ASSEMBLY

DRAWING NO. **B81308S2** REV **R08**

PART NO. DM1308 PRODUCT / PROJECT No. GASMIZER

SIZE A3 SCALE (UOS) 1:1 SHEET 2 OF 3

JFD WESTHILL
ENTERPRISE DRIVE,
WESTHILL, ABERDEEN,
AB32 6TQ, UK

TEL: +44 (0)1224 740145
E: enquiries@jfdglobal.com
W: jfdglobal.com

Flow Switch Assembly B82362S1

ITEM NO.	PART NO.	DESCRIPTION	QTY.
1	M6900	BODY, FLOWSWITCH, GSOL, 5 X 21/2 X 11/2	1
2	DM34000	PISTON, MODIFIED EM095, FLOW SWITCH	1
3	EM096	PLUG, PISTON, FLOW SWITCH	1
4	EM055	SPRING, FLOW SWITCH	1
5	EM054	ELEC, REED ASSY FOR DM2362	1
6	FB058	SCREW, SOCKET SET, FLAT BOTTOM, 2BA X 3/8"	1
7	FP291	PLUG, HEX, HOLLOW, 1/4" NPT, ST.ST.	2
8	RN111-7	O-RING	1

DESIGN SPECIFICATIONS

DESIGN PRESSURE : 1500 psi
DESIGN TEMPERATURE : 0°C - 55°C
TEST PRESSURE : 2250 psi (1.5 x DP)
CORROSION ALLOWANCE : NONE 6

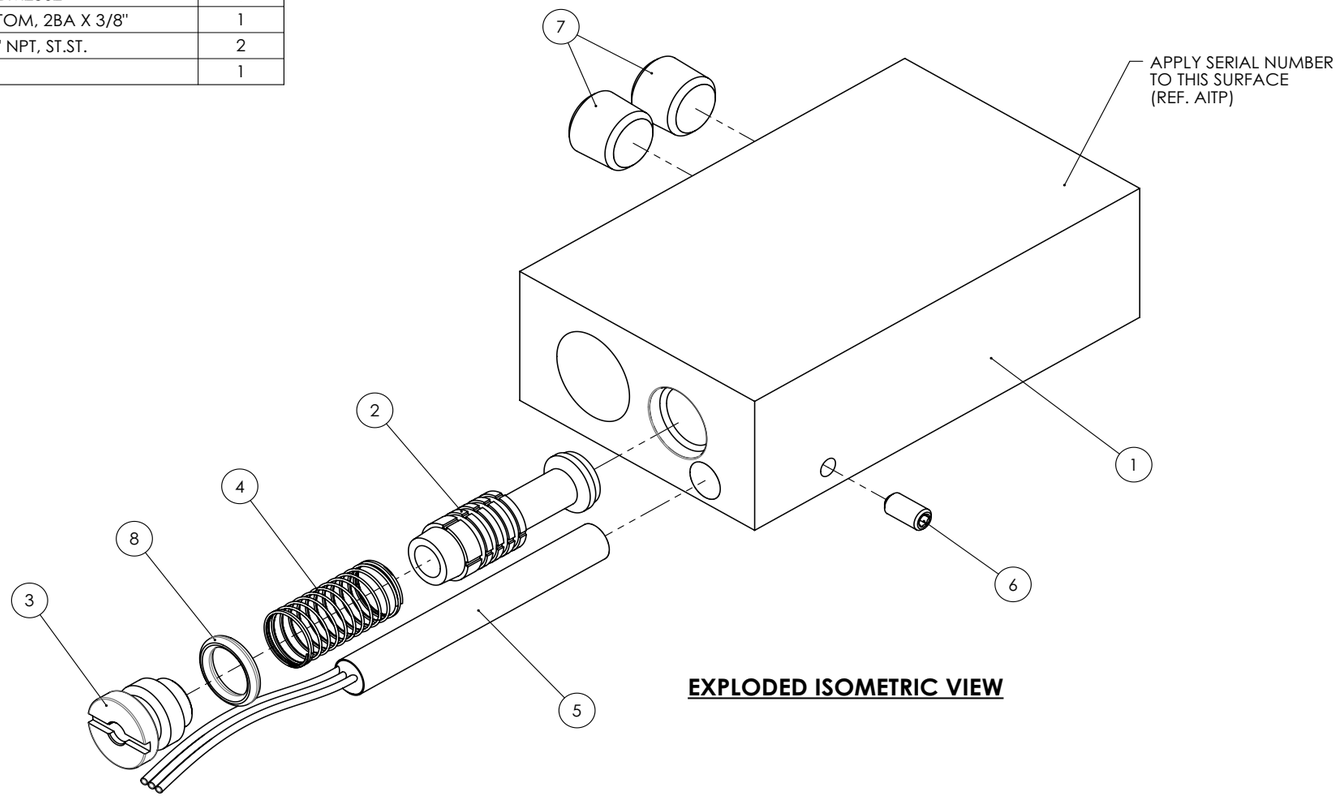

EXPLODED ISOMETRIC VIEW

NOTES:

SPRING (ITEM 4) MAY BE REMOVED WHEN FITTED IN VERTICAL POSITION AND FLOWING UPWARDS.

MATERIAL SEE PARTS LIST

FINISH N/A

ALL DIMENSIONS ARE IN mm (UOS)
ALL DIMENSIONS BEFORE PLATING (UOS)
REMOVE ALL SHARP EDGES AND BURRS

MACHINING TOLERANCE		FABRICATION TOLERANCE	
NO DECIMAL PLACE	±1.0	>0 <100	±0.5
ONE DECIMAL PLACE	±0.2	>100 <500	±1.5
TWO DECIMAL PLACE	±0.05	>500	±3.0
ANGULAR TOLERANCE	±0.5°		

6 DENOTES CHANGES MADE AT THIS REVISION

REV	DESCRIPTION	ECN	BY	DATE	AUTH.
R06	DESIGN CODE REMOVED	27018	JR	01/09/21	AN
R05	DESIGN CODE UPDATED	20995	DR	15/08/17	AN
R04	ITEM M6900 DIMENSIONS UPDATED	15485	MJ	12/02/13	MS
R00	ISSUED FOR MANUFACTURE				

THIRD ANGLE PROJECTION

DO NOT SCALE DRAWING

JFD OWNS THE COPYRIGHT OF THIS DOCUMENT AND ANY DESIGN RIGHT HEREIN. IT IS SUPPLIED IN CONFIDENCE AND MUST NOT BE USED FOR ANY PURPOSE OTHER THAN THAT FOR WHICH IT IS SUPPLIED AND MUST NOT BE REPRODUCED WITHOUT PERMISSION IN WRITING FROM THE OWNERS.

TITLE
FLOW SWITCH ASSEMBLY, MWP 1500 PSI

DRAWING NO. **B82362S1** REV **R06**

PART NO. DM23620 PRODUCT / PROJECT No. FLOW SWITCH

SIZE A3 SCALE (UOS) 1:1 SHEET 1 OF 1

JFD
JFD WESTHILL
ENTERPRISE DRIVE,
WESTHILL, ABERDEEN,
AB32 6TQ, UK

TEL: +44 (0)1224 740145
E: enquiries@jfdglobal.com
W: jfdglobal.com

Valve, Shutoff, 1/4” NPT Male C81359S1

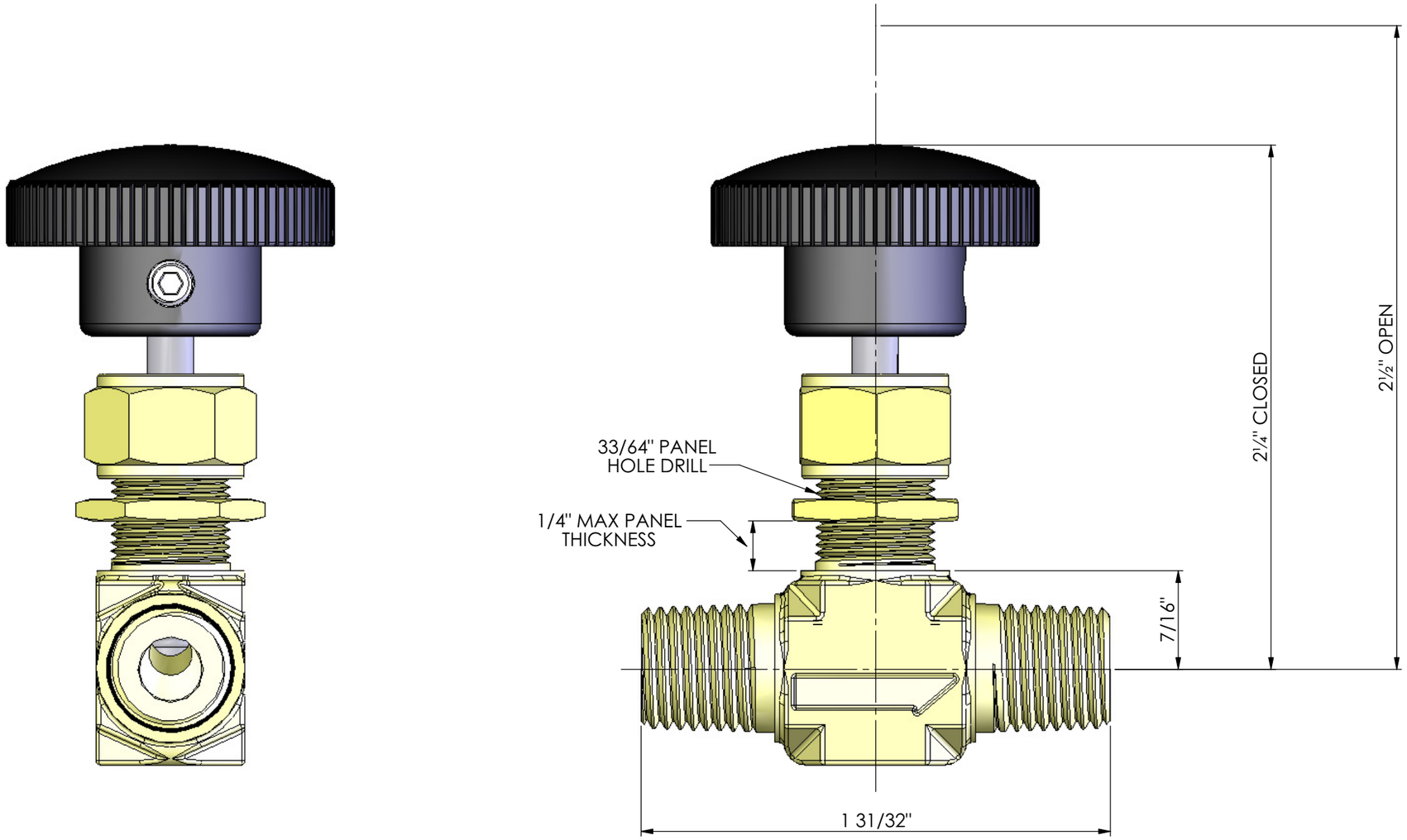

WORKING PRESSURE : 3000psi (207 bar)

REV	DESCRIPTION OF REVISION	ECN
R00	ISSUED FOR MANUFACTURE	N/A

MATERIAL: -

FINISH: -

DIVEX OWNS THE COPYRIGHT OF THIS DOCUMENT AND ANY DESIGN RIGHT EMBODIED HEREIN. IT IS SUPPLIED IN CONFIDENCE AND MUST NOT BE USED FOR ANY PURPOSE OTHER THAN THAT FOR WHICH IT IS SUPPLIED AND MUST NOT BE REPRODUCED WITHOUT PERMISSION IN WRITING FROM THE OWNERS

DIVEX
DIVEX LIMITED
ENTERPRISE DRIVE
WESTHILL
ABERDEEN. AB32 6TQ
UNITED KINGDOM.
TEL : +44 (0)1224 740145
FAX : +44 (0)1224 740172
email : info@divex.co.uk
www.divex.co.uk

A3

ALL DIMENSIONS IN INCHES (UOS)
ALL DIMENSIONS BEFORE PLATING (UOS)
REMOVE SHARP EDGES & BURRS
DIMENSIONAL TOLERANCES:
NO DECIMAL PLACES ±1/6
TWO DECIMAL PLACE ±0.02
THREE DECIMAL PLACES ±0.005
ANGULAR TOLERANCE ±0.5°

SCALE: 2 : 1
PRODUCT: -
PART No.: VS201
DRAWN BY: M.McCaskill
DATE: 20/04/2007

TITLE: **VALVE, SHUTOFF, ¼"NPT MALE**

DRG No.: 81359S1S1
SHEET: 1 of 1
REV: R00

3RD ANGLE PROJECTION

DO NOT SCALE DRAWING

Regulator, Pressure, Sample 0-25 psi (0-1.7 bar) C81325S1

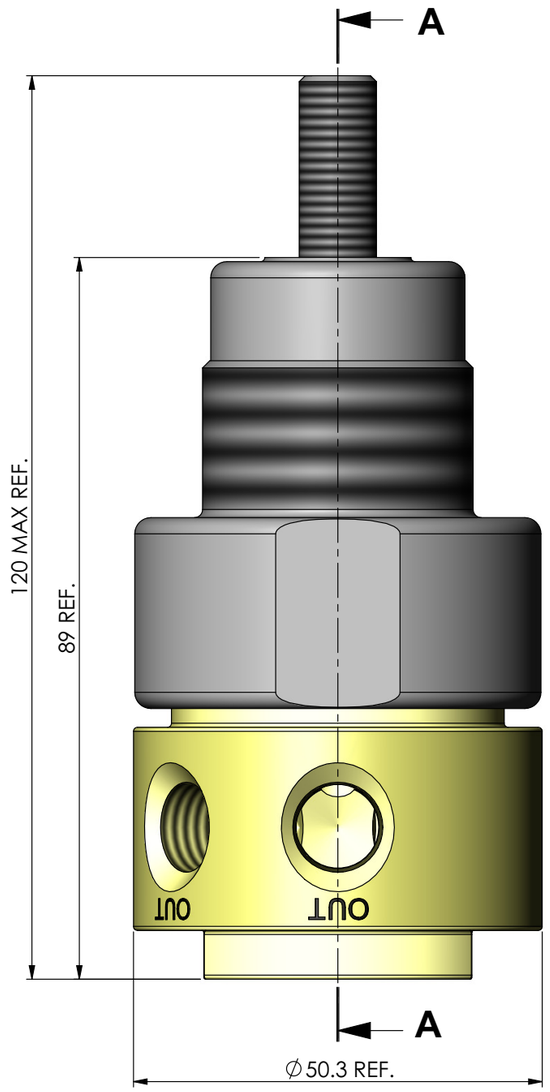

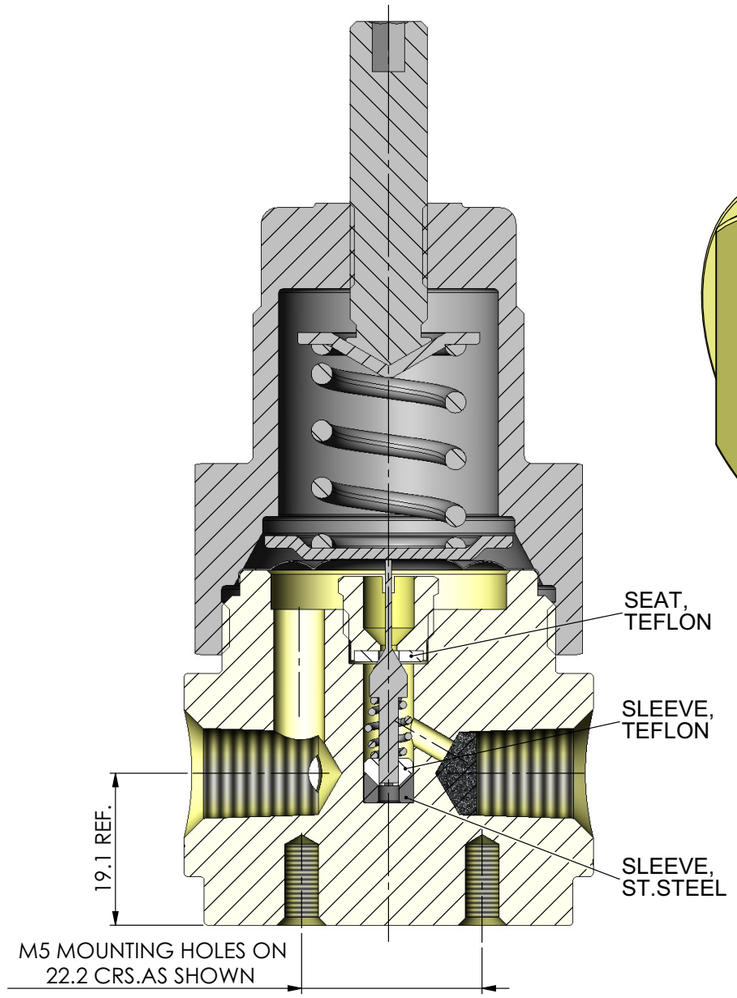

SECTION A - A

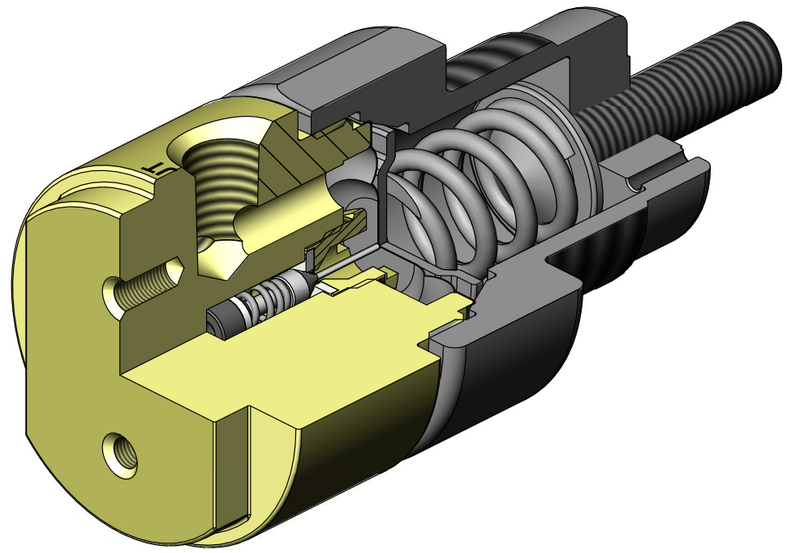

ISOMETRIC VIEW

NOTES:

INLET PRESSURE RANGE : 0-3000psi (205bar)
OUTLET PRESSURE RANGE : 0-25psi (0-1.7bar)

1 SET OUTLET PRESSURE AT 2psi (0.138bar)

SOFT SPARES KIT PART NO. : 389-6341
DIVEX PART NO. : RK205

REPAIR KIT PartNo. : 389-6342
DIVEX PART NO. : RK241

DIVEX OWNS THE COPYRIGHT OF THIS DOCUMENT AND ANY DESIGN RIGHT HEREIN. IT IS SUPPLIED IN CONFIDENCE AND MUST NOT BE USED FOR ANY PURPOSE OTHER THAN THAT FOR WHICH IT IS SUPPLIED AND MUST NOT BE REPRODUCED WITHOUT PERMISSION IN WRITING FROM THE OWNERS.

NOTES
PANEL NUT SUPPLIED SEPARATELY, DIVEX PART NO. RK208

1 DENOTES CHANGES MADE AT THIS REVISION

ALL DIMENSIONS SHOWN ARE IN MM (UOS)
ALL DIMENSIONS BEFORE PLATING (UOS)
REMOVE ALL SHARP EDGES AND BURRS

DIMENSIONAL TOLERANCES

MACHINING		FABRICATION	
NO DECIMAL PLACES	±1.0	SIZE >0 <100	±0.5
ONE DECIMAL PLACE	±0.2	SIZE >100 <500	±1.5
TWO DECIMAL PLACE	±0.05	SIZE >500	±3.0
ANGULAR TOLERANCE	±0.5°	ANGULAR TOLERANCE	±0.5°

MATERIAL: N/A
FINISH: N/A
THIRD ANGLE PROJECTION

REV	DESCRIPTION	ECN No.	BY	DATE	AUTH. BY
R06					
R05					
R04					
R03					
R02					
R01	SET PRESSURE UPDATED	18570	MJ	06/10/15	AN
R00	ISSUED FOR MANUFACTURE		MM	29/06/07	RTW

DO NOT SCALE DRAWING

TITLE: **REGULATOR, PRESSURE, 0-25 PSI**

DRAWING No. **C81325S1** REV **R01**

PART No. RP201

PRODUCT / PROJECT No. BULKHEAD REPROCESSING UNIT

SIZE A3 SCALE 1.5:1 SHEET 1 OF 1

DIVEX
DIVEX LIMITED
ENTERPRISE DRIVE
WESTHILL
ABERDEEN
AB32 6TQ
UNITED KINGDOM
Tel : +44(0)1224 740145
Fax : +44(0)1224 740172
email : info@divexglobal.com
www.divexglobal.com

Heat Exchanger, Gasmizer Topside Reprocessing Unit B81613S1

ITEM NO.	PART NO.	DESCRIPTION	MATERIAL	QTY.	MWP (bar)	BURST PRESS (bar)
1	E11878	BAR, FLAT, 25 MM x 3MM GR.316 S/S	ASTM A240 316L	0.75 mtr	-	-
2	FP391	COUPLING, HALF, 3/8" FNPT, S/S	ASTM A182 316L	2	206	-
3	M127B	END CAPS, HEAT EXCHANGER	BS970 316S31	8	-	-
4	TM492	TUBE, SEAMLESS, 1/2" OD x .065 WT, S/S	ASTM A269 TP316	9 ft	330	1320
5	TM698	TUBE, SEAMLESS, 3/4" x .064 WT, S/S	ASTM A269 TP316	0.8 ft	220	880
6	TM799	TUBE, SEAMLESS, 1" OD x 16 SWG, S/S	ASTM A269 TP316	6 ft	165	660

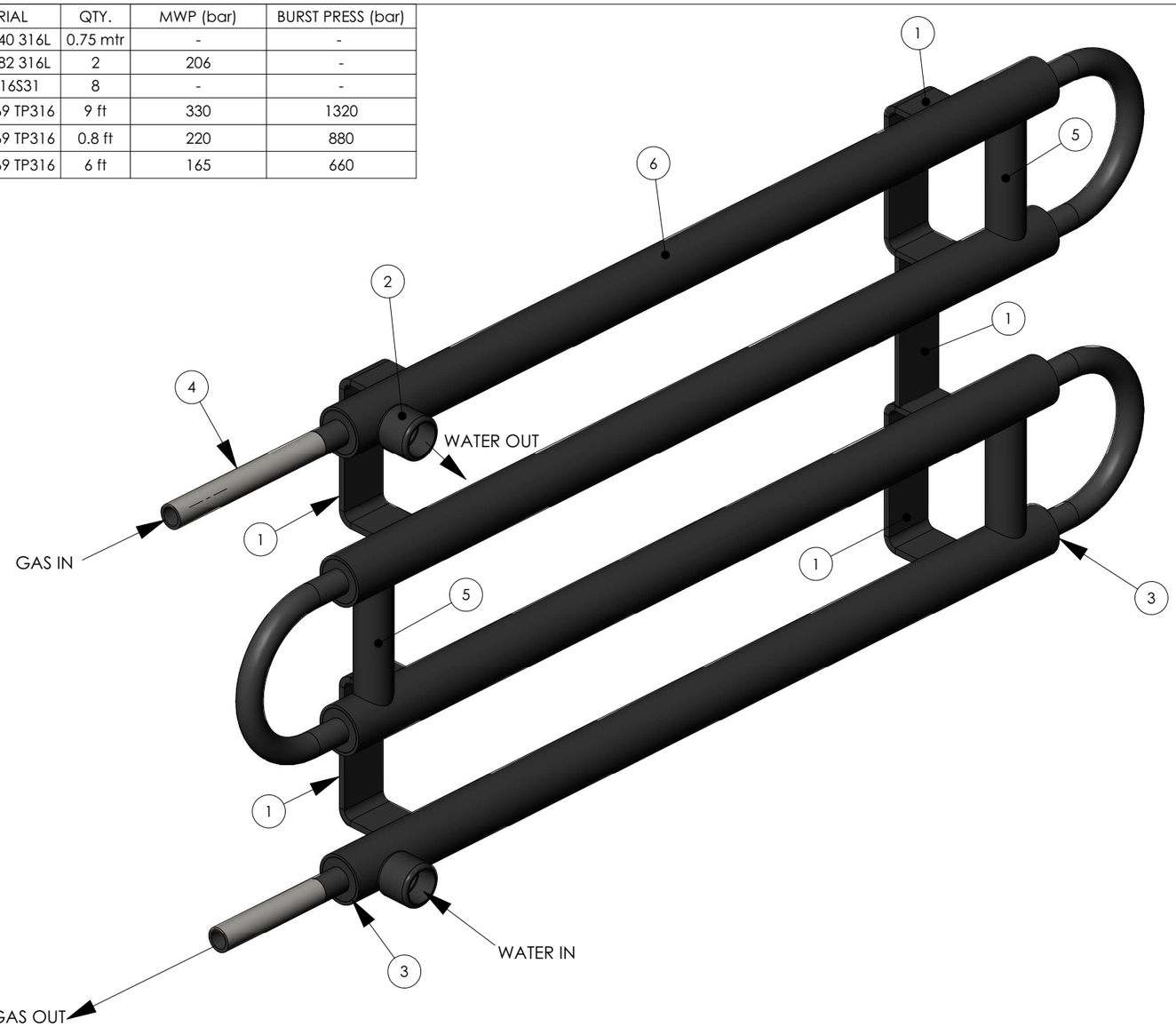

GAS PASSAGE
WORKING PRESSURE = 1500PSI (103 BAR)
DESIGN PRESSURE = 1650PSI (114 BAR) (1.1x WP)
TEST PRESSURE = 2475PSI (171BAR) (1.5 x DP)

13

WATER JACKET
WORKING PRESSURE = 59PSI (4 BAR)
DESIGN PRESSURE = 65PSI (4.5 BAR) (1.1x WP)
TEST PRESSURE = 100PSI (7BAR) (1.5 x DP) VIA WATER JACKET

13

DIVEX OWNS THE COPYRIGHT OF THIS DOCUMENT AND ANY DESIGN RIGHT HEREIN. IT IS SUPPLIED IN CONFIDENCE AND MUST NOT BE USED FOR ANY PURPOSE OTHER THAN THAT FOR WHICH IT IS SUPPLIED AND MUST NOT BE REPRODUCED WITHOUT PERMISSION IN WRITING FROM THE OWNERS.

NOTES
- MWP - MAXIMUM WORKING PRESSURE

13 DENOTES CHANGES MADE AT THIS REVISION

ALL DIMENSIONS SHOWN ARE IN MM (UOS)
ALL DIMENSIONS BEFORE PLATING (UOS)
REMOVE ALL SHARP EDGES AND BURRS

DIMENSIONAL TOLERANCES

MACHINING		FABRICATION	
NO DECIMAL PLACES	±1.0	SIZE >0 <100	±0.5
ONE DECIMAL PLACE	±0.2	SIZE >100 <500	±1.5
TWO DECIMAL PLACE	±0.05	SIZE >500	±3.0
ANGULAR TOLERANCE	±0.5°	ANGULAR TOLERANCE	±0.5°

MATERIAL: REFER TO SHEET 2

FINISH: N/A

THIRD ANGLE PROJECTION

REV	DESCRIPTION	ECN No	BY	DATE	AUTH.BY
R13	NOTES UPDATED	18477	MJ	24/09/15	AN
R12	BoM REVISED & SHEET 3 ADDED	15937	MJ	18/07/09	MS
R11	ITEM NUMBERS REVISED TO MATCH SHEET 2	12670	GR	17/07/09	RTW
R10	REDRAWN IN SOLIDWORKS	8999	MRM	12/12/07	RTW
R09	UPDATED	5573	-	10/03/05	RTW
R08	UPDATED	3470	-	21/06/01	HS
R00	ISSUED FOR MANUFACTURE		EB	03/03/84	HS

DO NOT SCALE DRAWING

TITLE: HEAT EXCHANGER, GASMIZER TOPSIDE REPROCESSING UNIT

DRAWING No. B81613S1 | REV R13

PART No. DM613E | PRODUCT / PROJECT No. GASMIZER

SIZE A2 | SCALE 1:1.5 | SHT 1 OF 3

DIVEX
DIVEX LIMITED
ENTERPRISE DRIVE
WESTHILL
ABERDEEN
AB32 6TQ
UNITED KINGDOM
Tel : +44(0)1224 740145
Fax : +44(0)1224 740172
email : info@divexglobal.com
www.divexglobal.com

P&ID, Control Console, Gasmizer System P1805905S1

XS1	BOOSTER START (NO)
XS2	BOOSTER STOP (NC)
XY1	BOOSTER POWER AVAILABLE
XY2	BOOSTER FAULT
XY3	BOOSTER RUNNING
XY4	MAKE-UP GAS FLOW
XY5	MAKE-UP GAS NO FLOW
XY6	RECLAIM GAS FLOW
XY7	RECLAIM GAS NO FLOW
R1	TIME DELAY RELAY (CLOSES WHEN FS2 CLOSES, OPENS 5S AFTER FS 2 OPENS)
R2	RELAY (CLOSES WHEN RUN LIGHT IS ILLUMINATED)
FS1	FLOWSWITCH 1 (CHANGEOVER SWITCH COMPRISES 1 NO AND 1 NC CONTACT. CHANGEOVER OCCURS WHEN MAKE UP GAS FLOW DETECTED
SOV1	SOLENOID VALVE1 (ENABLES DIVER O_2 MAKE-UP)
SOV2	SOLENOID VALVE 2 (ENABLES RAPID O_2 ENRICHMENT)

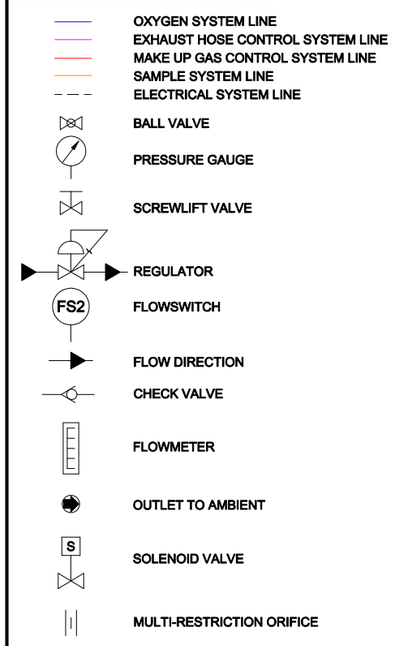

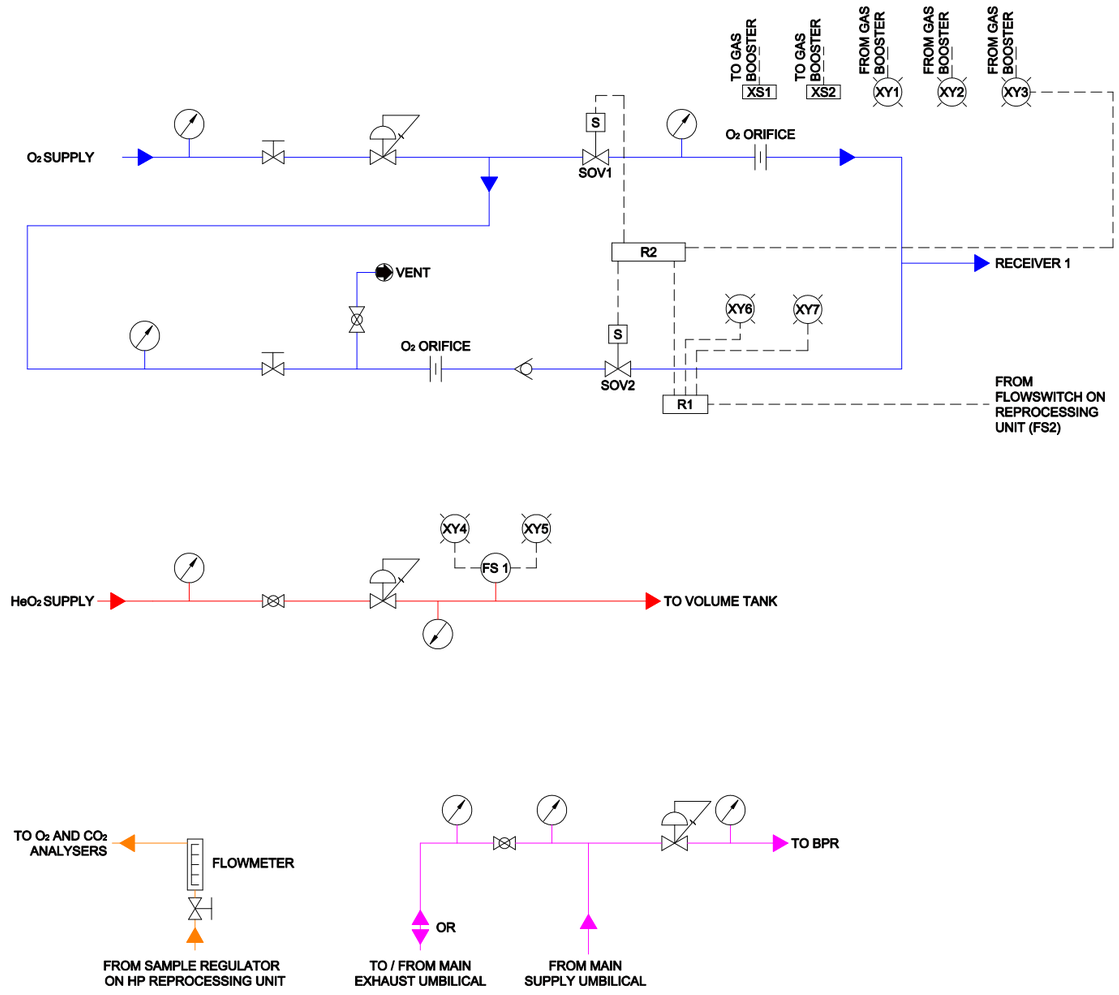

RELATED DRAWINGS	
P1805902S1	LP REPROCESSING UNIT
P1805903S1	HP REPROCESSING UNIT
P1805904S1	GAS BOOSTER
P1805905S1	CONTROL CONSOLE
P1805906S1	VOLUME TANK

DIVEX OWNS THE COPYRIGHT OF THIS DOCUMENT AND ANY DESIGN RIGHT HEREIN. IT IS SUPPLIED IN CONFIDENCE AND MUST NOT BE USED FOR ANY PURPOSE OTHER THAN THAT FOR WHICH IT IS SUPPLIED AND MUST NOT BE REPRODUCED WITHOUT PERMISSION IN WRITING FROM THE OWNERS.

NOTES:
INPUTS AND OUTPUTS TO UNIT ARE ANNOTATED ASSUMING UNIT IS PART OF A CORRECTLY INSTALLED DIVEX GASMIZER SYSTEM.

ALL DIMENSIONS SHOWN ARE IN MM (UOS)
ALL DIMENSIONS BEFORE PLATING (UOS)
REMOVE ALL SHARP EDGES AND BURRS

DIMENSIONAL TOLERANCES

MACHINING		FABRICATION	
NO DECIMAL PLACES	±1.0	SIZE >0 <100	±0.5
ONE DECIMAL PLACE	±0.2	SIZE >100 <500	±1.5
TWO DECIMAL PLACE	±0.05	SIZE >500	±3.0
ANGULAR TOLERANCE	±0.5°	ANGULAR TOLERANCE	±0.5°

MATERIAL: N/A
FINISH: N/A
THIRD ANGLE PROJECTION

REV	DESCRIPTION	ECN No	BY	DATE	AUTH. BY
R06					
R05					
R04					
R03					
R02					
R01					
R00	ISSUED FOR INFORMATION		GC	11/12/2006	RTW

DO NOT SCALE DRAWING

TITLE: PROCESS & INSTRUMENTATION DIAGRAM, CONTROL CONSOLE, GASMIZER SYSTEM
PRODUCT / PROJECT No. P1805
PART No. N/A
DRAWING No. P1805905S1
SIZE A2 | SCALE NTS | SHT 1 OF 1 | REV R00

DIVEX
DIVEX LIMITED
ENTERPRISE DRIVE
WESTHILL
ABERDEEN
AB32 6TQ
UNITED KINGDOM
Tel : +44(0)1224 740145
Fax : +44(0)1224 740172
email : info@divexglobal.com
www.divexglobal.com

Pipework Schematic Control Panel B81174S1

ITEM NO.	PART NO.	DESCRIPTION	QTY.	MATERIAL	M.A.W.P.
1	RK209	MOUNTING BRACKET, REGULATOR	1	-	-
2	FS204	CONNECTOR, FEMALE, 1/4" TUBE - 1/4" NPT(F)	2	BRASS	227 BAR
3	FS201	CONNECTOR, MALE, 1/4" TUBE - 1/4" NPT(M)	6	BRASS	275 BAR
4	TM201	TUBE,COPPER, SEAMLESS, 1/4"OD X .049	3M	COPPER	172 BAR
5	FB012	SCREW, PAN HD. 1/4" UNC X 1/2" LG.	2	ST.ST. 316	-
6	GF201	FLOWMETER WITH VALVE, 0.3 - 3 L/MIN	1	-	NOTE 1
7	P259B	PENETRATOR PLATE, PANEL	1	ST.ST. 316	206 BAR
8	TM204	TUBE, FLEXIBLE, BLACK, 1/4" O/D. (20 BAR MAX. W.P.)	4M	NYLON	20 BAR
9	FS217	TEE, RUN, MALE, 1/4" TUBE - 1/4" NPT(M)	1	BRASS	275 BAR
10	VB201	BALL VALVE, 1/4" NPT(F)	1	BRASS	206 BAR
11	FS206	TEE, RUN, FEMALE, 1/4" TUBE - 1/4" NPT(F)	1	BRASS	227 BAR
12	GP201	GAUGE, PRESSURE, 4" / 0-1000 PSI	2	-	69 BAR
13	FS202	ELBOW, MALE, 1/4" TUBE - 1/4" NPT(M)	4	BRASS	275 BAR
14	RP202	REGULATOR, PRESSURE 0-1500 PSI	1	BRASS	413.6 BAR (INLET) 103.4 BAR (OUTLET)
15	FW019	WASHER, PLAIN, NYLON, BLACK, M4	2	NYLON	-
16	GP206	GAUGE, PRESSURE, O2, 4" / 0-1600 PSI	1	-	110 BAR
17	FB228	SCREW, PAN HD. M4 X 10 LG.	2	ST.ST. 316	-
18	FS237	CONNECTOR, MALE, 1/4" TUBE - 1/8" BSPT(M)	2	BRASS	344 BAR

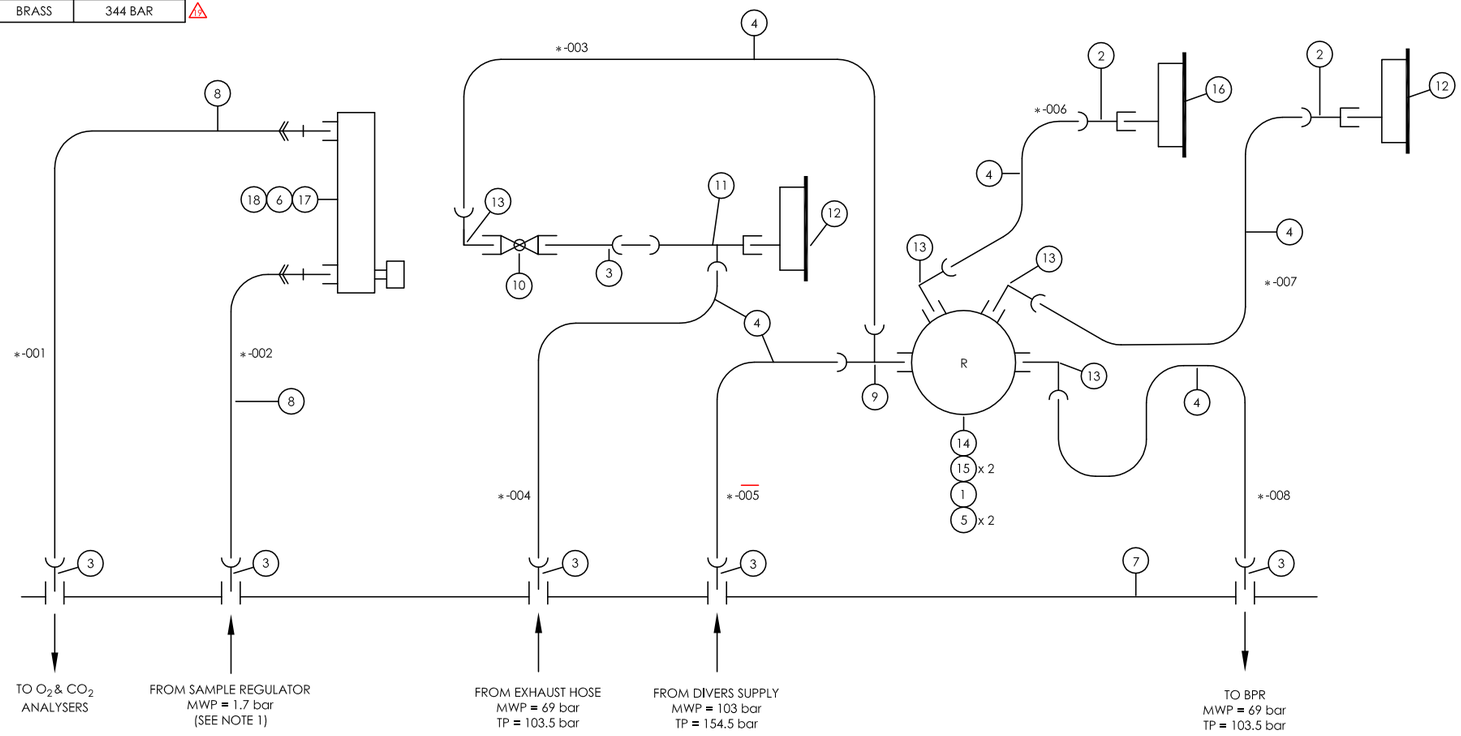

NOTES:

SAMPLE CIRCUIT OPEN TO ATMOSPHERE

DENOTES CHANGES MADE AT THIS REVISION

REV	DESCRIPTION	ECN	BY	DATE	AUTH.
R19	PRESSURES UPDATED ON BoM	24526	SR	05/12/19	AN
R18	IDENTIFIERS ADDED	23523	SD	11/04/19	AN
R17	CORRECTED TYPO IN PRESSURES	21571	JR	11/10/17	AN
R00	ISSUED FOR MANUFACTURE		MB	24/01/91	HS

THIRD ANGLE PROJECTION

DO NOT SCALE DRAWING

JFD OWNS THE COPYRIGHT OF THIS DOCUMENT AND ANY DESIGN RIGHT HEREIN. IT IS SUPPLIED IN CONFIDENCE AND MUST NOT BE USED FOR ANY PURPOSE OTHER THAN THAT FOR WHICH IT IS SUPPLIED AND MUST NOT BE REPRODUCED WITHOUT PERMISSION IN WRITING FROM THE OWNERS.

TITLE: PIPEWORK SCHEMATIC CONTROL PANEL

DRAWING NO. B81174S1 | REV R19

PART NO. C1174H | PRODUCT / PROJECT No. GASMIZER

SIZE A2 | SCALE (NOS) NTS | SHEET 1 OF 1

JFD WESTHILL
ENTERPRISE DRIVE,
WESTHILL, ABERDEEN,
AB32 6TQ, UK

TEL: +44 (0)1224 740145
E: enquiries@jfdglobal.com
W: jfdglobal.com

Pipework Schematic Oxygen Panel B81175S1

ITEM NO.	PART NO.	DESCRIPTION	QTY.	MATERIAL	M.A.W.P.
1	FP202	TEE, FEMALE PIPE, 1/4" FNPT, BRASS, WP220BAR	1	BRASS	220 BAR
2	FS203	FTG,UNION TEE, 1/4"TUBE	1	BRASS	407 BAR
3	FS205	CONNECTOR,BULKHD,FEMALE,1/4"TUBE,1/4"FNPT	2	BRASS	227 BAR
4	FS206	FTG,RUN TEE,FEMALE., 1/4"TUBE-1/4"FNPT	1	BRASS	227 BAR
5	GP202	GAUGE, PANEL, CLAMP, 63MM, O2, 0-3000PSI	1	BRASS	206 BAR
6	GP203	GAUGE, PANEL, CLAMP, 63MM, O2, 0-1000PSI	1	BRASS	69 BAR
7	FS202	FTG,ELBOW,MALE, 1/4"TUBE-1/4"MNPT	2	BRASS	275 BAR
8	VS208	VALVE,NEEDLE, WHITEY, B-1VM4	1	BRASS	161 BAR
9	FP206	PLUG,HEX,MALE, 1/4"MNPT	1	BRASS	269 BAR
10	RP203	REGULATOR, PRESS,1/4"FNPT,BRASS,0-55BAR,WP413BAR	1	BRASS	413.6 BAR (INLET) 55.2 BAR (OUTLET)
11	FP209	NIPPLE,HEX, 1/4"MNPT-1/8"MNPT	1	BRASS	269 BAR
12	VE101	VALVE,SOLENOID,1/8" FNPT 12 VDC	1	BRASS	69 BAR
13	FS209	FTG,ELBOW,MALE, 1/4"TUBE-1/8"MNPT	1	BRASS	344 BAR
14	FS207	FTG,ELBOW,FEMALE, 1/4"TUBE-1/4"FNPT	3	BRASS	227 BAR
15	TM201	TUBE,COPPER, SEAMLESS, 1/4"OD X .049	3M	COPPER	172 BAR
16	FS201	FTG,CONNECTOR,MALE, 1/4"TUBE-1/4"MNPT	1	BRASS	275 BAR
17	DM174	O2 ORIFICE ASSY, SUPPLY	1	B81134S3	69 BAR
18	RK209	BRACKET,MOUNTING,TESCOM	1	-	-
19	FB012	SCREW,M/C,PAN HD, 1/4"UNC X 1/2"	2	SS	-
20	FW019	WASHER,PLAIN, NYLON 9/16"ODX1/4"IDX1/16"THK	2	NYLON	-

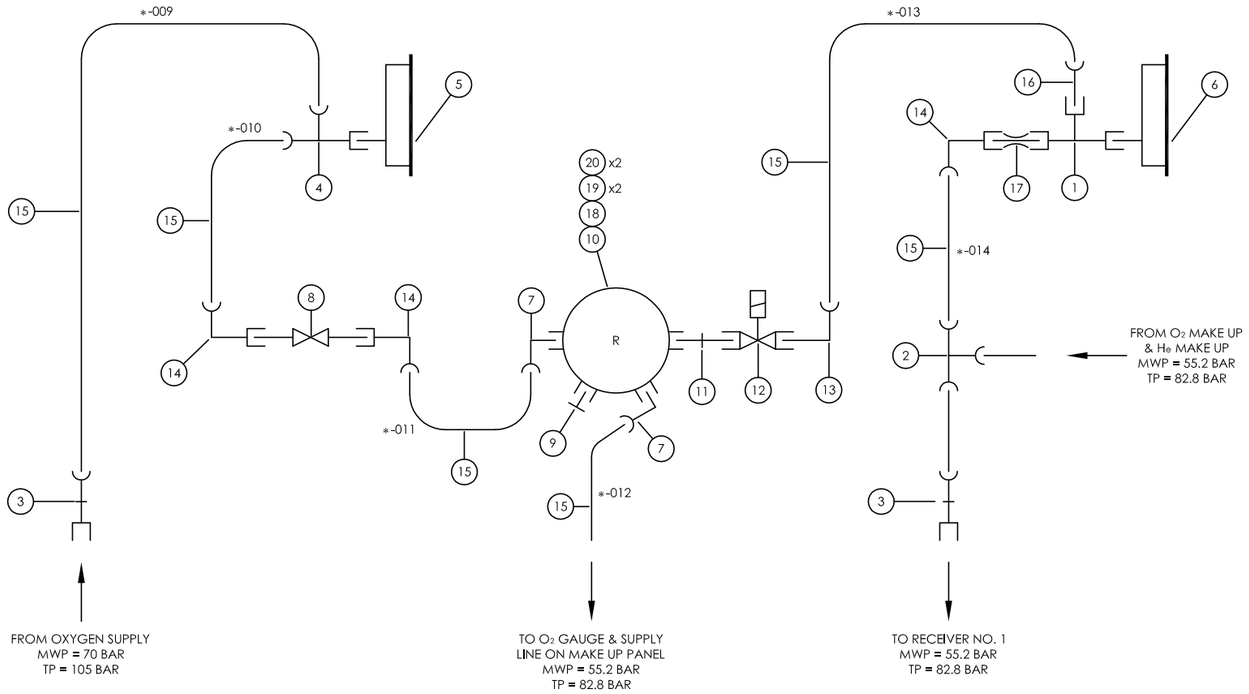

NOTES:

REV	DESCRIPTION	ECN	BY	DATE	AUTH.
R17	PRESSURES UPDATED ON BoM	24526	SR	05/12/19	AN
R16	IDENTIFIERS ADDED	23523	SD	12/04/19	AN
R15	ITEM 15 CORRECTED	20916	JR	27/04/17	SC
R00	ISSUED FOR MANUFACTURE		MB	24/01/91	HS

DENOTES CHANGES MADE AT THIS REVISION

THIRD ANGLE PROJECTION

DO NOT SCALE DRAWING

JFD OWNS THE COPYRIGHT OF THIS DOCUMENT AND ANY DESIGN RIGHT HEREIN. IT IS SUPPLIED IN CONFIDENCE AND MUST NOT BE USED FOR ANY PURPOSE OTHER THAN THAT FOR WHICH IT IS SUPPLIED AND MUST NOT BE REPRODUCED WITHOUT PERMISSION IN WRITING FROM THE OWNERS.

TITLE: PIPEWORK SCHEMATIC OXYGEN PANEL

DRAWING NO: B81175S1 | REV: R17

PART NO: C1175F | PRODUCT / PROJECT No.: GASMIZER

SIZE: A2 | SCALE (UOS): NTS | SHEET: 1 OF 1

JFD WESTHILL
ENTERPRISE DRIVE,
WESTHILL, ABERDEEN,
AB32 6TQ, UK

TEL: +44 (0)1224 740145
E: enquiries@jfdglobal.com
W: jfdglobal.com

Pipework Schematic Make-up Panel B81229S1

ITEM NO.	PART NO.	DESCRIPTION	QTY.	MATERIAL	MAWP.
1	GP203	GAUGE, PANEL, CLAMP, 63MM, O2, 0-1000PSI	1	BRASS	69 bar
2	FS206	FTG,RUN TEE,FEMALE., 1/4"TUBE-1/4"FNPT	1	BRASS	227 bar
3	FS207	FTG,ELBOW ,FEMALE, 1/4"TUBE-1/4"FNPT	1	BRASS	227 bar
4	VS208	VALVE,NEEDLE, WHITEY, B-1VM4	1	BRASS	161 bar
5	FP204	ELBOW , MALE/FEMALE, 1/4" NPT, BRASS, WP220BAR	1	BRASS	221 bar
6	FP202	TEE, FEMALE PIPE, 1/4" FNPT, BRASS, WP220BAR	1	BRASS	221 bar
7	FS202	FTG,ELBOW ,MALE, 1/4"TUBE-1/4"MNPT	4	BRASS	275 bar
8	VB201	VALVE,BALL,1/4"FNPT	2	BRASS	206 bar
9	DM175	O2 ORIFICE ASSY, MAKE-UP	1	B81134S3	69 bar
10	VC202	VALVE,CHECK, 1/4" FNPT	1	BRASS	206 bar
11	FS204	FTG,CONNECTOR,FEMALE, 1/4"TUBE-1/4"FNPT	1	BRASS	227 bar
12	GP206	GAUGE, 4", O2, 0-1600 PSI	1	SS	110 bar
13	FS496	FTG,ELBOW ,MALE, 1/2"TUBE-1/2"MNPT	2	316 SS	462 bar
14	FP411	ELBOW , MALE-MALE, 1/2"(M)NPT	1	BRASS	269 bar
15	RP404	REGULATOR, PRESSURE, 0-1500 PSI	1	BRASS	258 bar
16	FP206	PLUG,HEX,MALE, 1/4"MNPT	1	BRASS	269 bar
17	FS488	CONNECTOR, 1/2" TUBE - 1/4" NPT MALE	1	316 SS	462 bar
18	FS279	FTG,ELBOW ,FEMALE, 1/4"TUBE-1/4"FNPT	1	316 SS	454 bar
19	FS486	FTG,ELBOW , 1/2"TUBE-1/4"MNPT	3	316 SS	462 bar
20	GP274	GAUGE,63MM,0-4000 PSI,O2 CLEAN,1/4"MNPT REAR ENTRY	1	SS	275 bar
21	TM201	TUBE,COPPER, SEAMLESS, 1/4"OD X .049	3M	COPPER	172 bar
22	TM296	TUBE,STAINLESS STEEL, SEAMLESS, 1/4"OD X 0.036"	2M	316 SS	397 bar
23	TM23151	TUBE, STAINLESS 316, SEAMLESS, 1/2" OD X 16SWG	4M	316 SS	351 bar
24	TM204	TUBE,FLEXIBLE,BLACK, 1/4"OD(100 FT COIL)	1M	NYLON	20 bar
25	FP209	NIPPLE,HEX, 1/4"MNPT-1/8"MNPT	1	BRASS	269 bar
26	FS299	FTG,CONNECTOR,MALE, 1/4"TUBE-1/4"MNPT	1	316 SS	551 bar
27	FB012	SCREW ,M/C,PAN HD, 1/4"UNC X 1/2"	2	SS	-
28	FW019	WASHER,PLAIN, NYLON 9/16"ODX1/4"IDX1/16"THK	2	NYLON	-
29	DM23620	FLOW SWITCH ASSEMBLY, MWP 1500 PSI.	1	B82362S1	103 bar
30	RK209	BRACKET,MOUNTING,TESCOM	1	-	-
31	FS205	CONNECTOR, BULKHD, FEMALE, 1/4"TUBE, 1/4"FNPT	1	BRASS	227 bar
32	FP295	TEE, MALE RUN, 1/4" NPT F-M-F, SS, WP 390BAR	1	316 SS	386 bar
33	VE101	VALVE,SOLENOID,1/8" FNPT 12 VDC	1	BRASS	69 bar
34	FS209	FTG,ELBOW ,MALE, 1/4"TUBE-1/8"MNPT	1	BRASS	344 bar

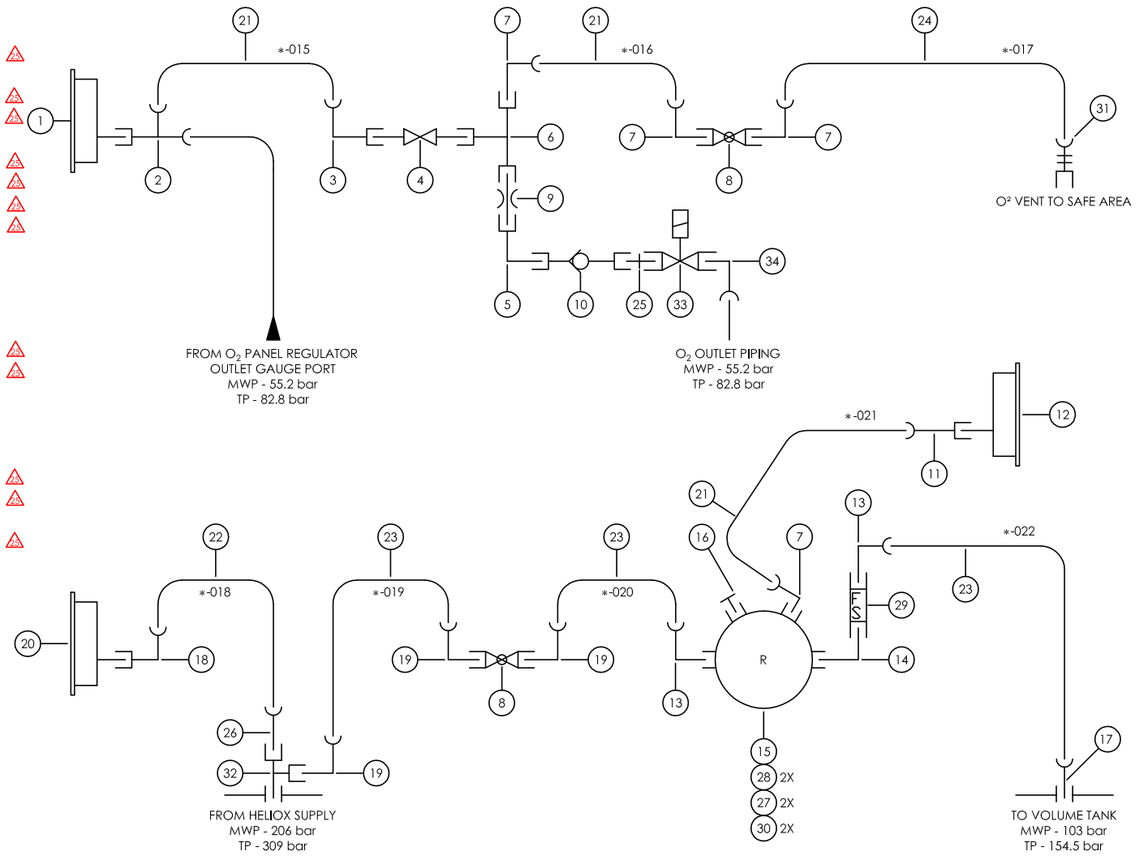

NOTES:

REV	DESCRIPTION	ECN	BY	DATE	AUTH.
R25	PRESSURES UPDATED ON BoM	24526	SR	05/12/19	AN
R24	IDENTIFIERS ADDED	23523	SD	12/04/19	AN
R23	EM019 REPLACED FOR FS205	22327	RC	17/04/18	AN
R00	ISSUED FOR MANUFACTURE		MS	24/01/91	HS

DENOTES CHANGES MADE AT THIS REVISION

THIRD ANGLE PROJECTION

DO NOT SCALE DRAWING

JFD OWNS THE COPYRIGHT OF THIS DOCUMENT AND ANY DESIGN RIGHT HEREIN. IT IS SUPPLIED IN CONFIDENCE AND MUST NOT BE USED FOR ANY PURPOSE OTHER THAN THAT FOR WHICH IT IS SUPPLIED AND MUST NOT BE REPRODUCED WITHOUT PERMISSION IN WRITING FROM THE OWNERS.

TITLE: PIPING SCHEMATIC, MAKE UP PANEL

DRAWING NO. B81229S1 | REV R25

PART NO. C1229 | PRODUCT / PROJECT No. GASMIZER

SIZE A2 | SCALE (UOS) NTS | SHEET 1 OF 1

JFD WESTHILL
ENTERPRISE DRIVE,
WESTHILL, ABERDEEN,
AB32 6TQ, UK

TEL: +44 (0)1224 740145
E: enquiries@jfdglobal.com
W: jfdglobal.com

Control Console, Electrical Assembly P1805266S1

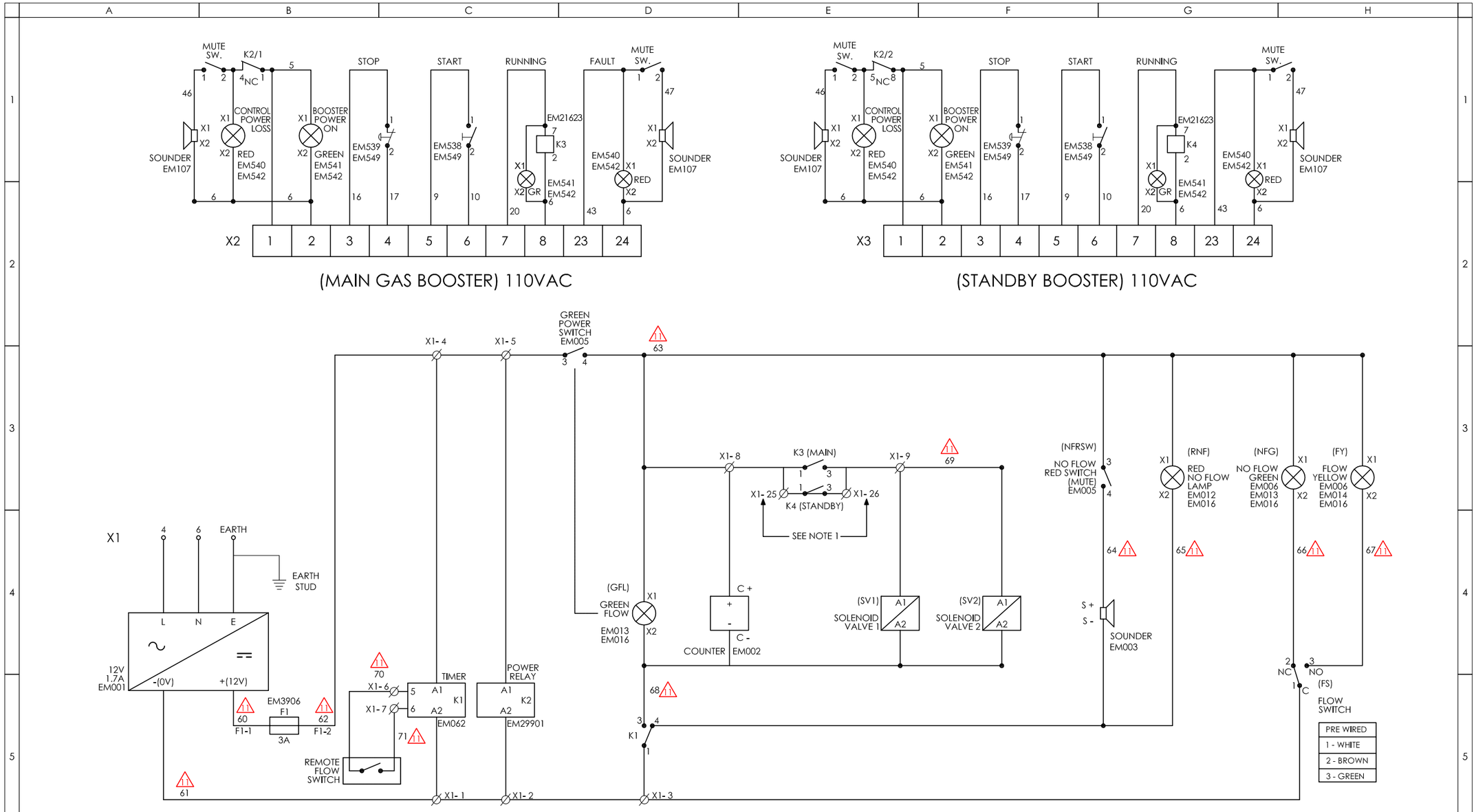

NOTES:

1. TERMINALS X1-25 & X-26 ONLY USED WITH STANDBY BOOSTER
2. WIRE NUMBERS REFRENCED TO DRAWING B10510303

CABLES:

240V - 3CORE 1mm² MAINS CABLE
BLUE & BROWN CORES USED FOR 510 CONNECTIONS
EARTH CORE TRIMMED BACK
+V DC - RED 0.5mm² / 20AWG
-V DC - BLACK 0.5mm² / 20AWG

DENOTES CHANGES MADE AT THIS REVISION

REV	DESCRIPTION	ECN	BY	DATE	AUTH.
R11	IDENTIFIERS ADDED	23523	SD	11/04/19	AB
R10	POWER SUPPLY TERMINAL NUMBER UPDATED	21702	DR	15/02/19	MH
R09	COMPONENT TAGS AND WIRE NUMBERS ADDED	18784	ZD	25/02/16	MH
R00	ISSUED FOR MANUFACTURE		MRM	10/10/06	RTW

THIRD ANGLE PROJECTION

DO NOT SCALE DRAWING

JFD OWNS THE COPYRIGHT OF THIS DOCUMENT AND ANY DESIGN RIGHT HEREIN. IT IS SUPPLIED IN CONFIDENCE AND MUST NOT BE USED FOR ANY PURPOSE OTHER THAN THAT FOR WHICH IT IS SUPPLIED AND MUST NOT BE REPRODUCED WITHOUT PERMISSION IN WRITING FROM THE OWNERS.

TITLE: CONTROL CONSOLE, ELECTRIC GASMIZER

DRAWING NO. P1805266S1 | REV R11

PART NO. B1571 | PRODUCT / PROJECT No. GASMIZER

SIZE A3 | SCALE (UOS) NTS | SHEET 1 OF 2

JFD WESTHILL ENTERPRISE DRIVE, WESTHILL, ABERDEEN, AB32 6TQ, UK
TEL: +44 (0)1224 740145
E: enquiries@jfdglobal.com
W: jfdglobal.com

O_2 Regulator 0 - 800 psi 81320S1

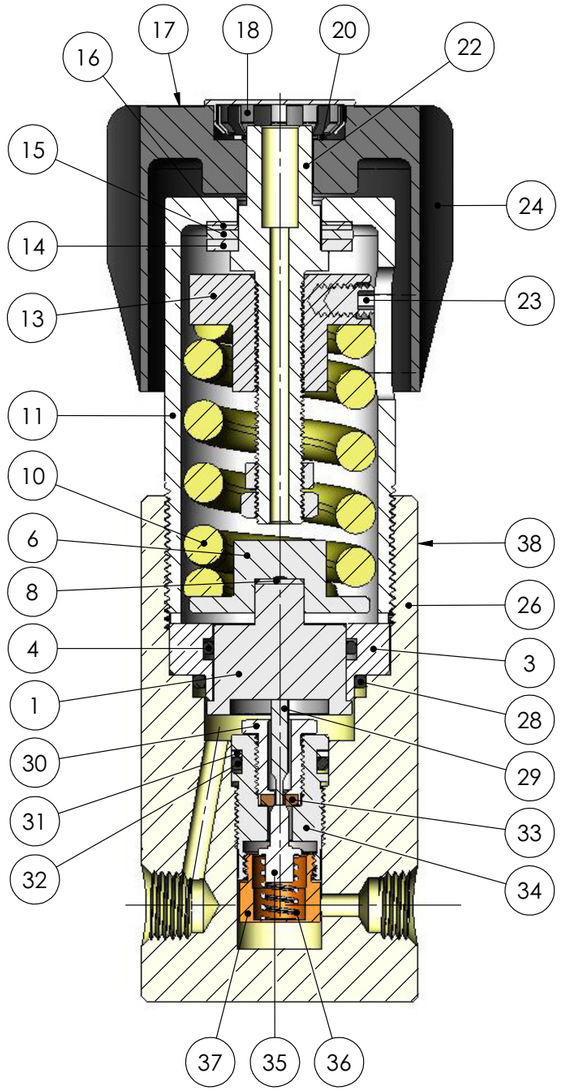

ITEM	PART No.	DESCRIPTION	Qty.	Spares 389-1679
1	1027-2	Sensor	1	
3	1033-2	Sensor Back-up	1	
4	5200-021209	O-Ring, Viton	1	1
6	1741-1	Spring Pad	1	
8	1740	Seal, Teflon	1	1
10	1050	Load Spring	1	
11	5445-1	Bonnet	1	
13	1130-3	Spring Cap Assembly	1	
14	5425	Thrust Washer	1	
15	5424	Thrust Bearing	1	
16	5426	Thrust Washer	1	
17	5435-2	Data Plate	1	
18	5432	Button	1	
20	5427	Retaining Ring	1	
22	5415-1	Adjusting Screw	1	
23	5401-21088	Limit Screw	1	
24	5397-6	Handknob	1	
26	5950-2411	Regulator Body	1	
28	5200-021227	O-Ring, Viton	1	1
29	1034-2	Connector	1	
30	1035-2	Seat Retainer	1	
31	5476-11131	Back-up Ring, Teflon	1	1
32	5200-021137	O-Ring, Viton	1	1
33	1036	Main Valve Seat, Kel-f	1	1
34	1038-2	Main Valve Body	1	
35	1037-2	Main Valve	1	
36	1437	Spring	1	
37	6666	Filter Assembly	1	
38	8101	Data Plate	1	

NOTES :

INLET PRESSURE RANGE : 0-6000psi (0-410bar)
OUTLET PRESSURE RANGE : 0-800psi (0-55bar)

SOFT SPARES KIT Part No. : 389-1679 (See Table)
DIVEX Part No. : RK202

REV	DESCRIPTION OF REVISION	ECN
R00	ISSUED FOR MANUFACTURE	N/A

MATERIAL: -

FINISH: -

DIVEX OWNS THE COPYRIGHT OF THIS DOCUMENT AND ANY DESIGN RIGHT EMBODIED HEREIN. IT IS SUPPLIED IN CONFIDENCE AND MUST NOT BE USED FOR ANY PURPOSE OTHER THAN THAT FOR WHICH IT IS SUPPLIED AND MUST NOT BE REPRODUCED WITHOUT PERMISSION IN WRITING FROM THE OWNERS

ALL DIMENSIONS IN MM (UOS)
ALL DIMENSIONS BEFORE PLATING (UOS)
REMOVE SHARP EDGES & BURRS

DIMENSIONAL TOLERANCES:
NO DECIMAL PLACES ±1.0
ONE DECIMAL PLACE ±0.2
TWO DECIMAL PLACES ±0.05
ANGULAR TOLERANCE ±0.5°

DIVEX LIMITED
ENTERPRISE DRIVE
WESTHILL
ABERDEEN. AB32 6TQ
UNITED KINGDOM.
TEL : +44 (0)1224 740145
FAX : +44 (0)1224 740172
email : info@divex.co.uk
www.divex.co.uk

A3

SCALE	PRODUCT	PART No.	DRAWN BY	DATE
NTS	PRESSURE REGULATOR	RP203	K.Baxter	08/12/2008

TITLE: **REGULATOR, PRESSURE, 0 - 800psi**

DRG No.	SHEET	REV
81320S1	1 of 1	R00

3RD ANGLE PROJECTION

DO NOT SCALE DRAWING

Regulator, Pressure, 0 - 1500 psi 81321S1

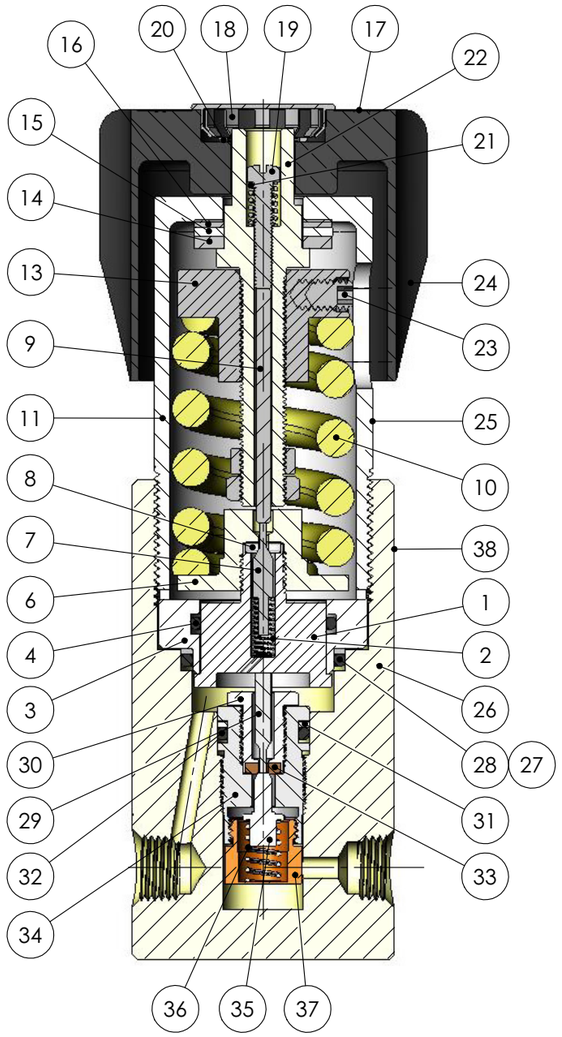

ITEM	PART No.	DESCRIPTION	Qty.	Spares 389-1449	Spares 389-1275
1	1027-2	Sensor	1		
2	1022	Spring	1	1	
3	1033-2	Sensor Back-Up	1		
4	5200-001209	O-Ring, Buna-n	1	1	1
6	1021-1	Spring Pad	1		
7	1023-2	Vent Valve	1	1	
8	1036	Vent Valve Seat, Kel-f	1	1	1
9	5948-2	Vent Valve Rod	1		
10	1051	Load Spring	1		
11	5945-1	Bonnet	1		
13	1130-3	Spring Cap Assembly	1		
14	5425	Thrust Washer	1		
15	5424	Thrust Bearing	1		
16	5426	Thrust Washer	1		
17	6320	Data Plate	1		
18	5432	Bottom Plug	1		
19	5401-14328	Screw	1		
20	5427	Retaining Ring	1		
21	2776	Spring	1		
22	40942	Adjusting Screw	1		
23	5405-211686	Limit Screw	1		
24	5397-6	Handknob	1		
25	5153	Vent Label	1		
26	5950-2411	Regulator Body	1		
27	5470-11220	Back-up Ring, Teflon	1	1	1
28	5200-001227	O-Ring, Buna-n	1	1	1
29	1034-2	Connector	1		
30	1035-2	Seat Retainer	1		
31	5476-11131	Back-up Ring, Teflon	1	1	1
32	5200-001137	O-Ring, Buna-n	1	1	1
33	1036-7	Main Valve Seat, Kel-f	1	1	1
34	1038-2	Main Valve Body	1		
35	1037-2	Main Valve	1	1	
36	1437	Spring	1	1	
37	1011	Filter Assembly	1	1	
38	60079	Data Plate	1		

DIVEX OWNS THE COPYRIGHT OF THIS DOCUMENT AND ANY DESIGN RIGHT HEREIN. IT IS SUPPLIED IN CONFIDENCE AND MUST NOT BE USED FOR ANY PURPOSE OTHER THAN THAT FOR WHICH IT IS SUPPLIED AND MUST NOT BE REPRODUCED WITHOUT PERMISSION IN WRITING FROM THE OWNERS.

NOTES
INLET PRESSURE RANGE : 0-6000psi (0-410bar)
OUTLET PRESSURE RANGE : 0-1500psi (0-105bar)

REPAIR KIT Part No. : 389-1449 (See Table Column 1)
DIVEX Part No. : RK201

SOFT SPARES KIT Part No. : 389-1275 (See Table Column 2)
DIVEX Part No. : RK206

ALL DIMENSIONS SHOWN ARE IN MM (UOS)
ALL DIMENSIONS BEFORE PLATING (UOS)
REMOVE ALL SHARP EDGES AND BURRS

DIMENSIONAL TOLERANCES

MACHINING		FABRICATION	
NO DECIMAL PLACES	±1.0	SIZE >0 <100	±0.5
ONE DECIMAL PLACE	±0.2	SIZE >100 <500	±1.5
TWO DECIMAL PLACE	±0.05	SIZE >500	±3.0
ANGULAR TOLERANCE	±0.5°	ANGULAR TOLERANCE	±0.5°

MATERIAL: -
FINISH: -
THIRD ANGLE PROJECTION

REV	DESCRIPTION	ECN No.	BY	DATE	AUTH. BY
R06					
R05					
R04					
R03					
R02					
R01					
R00	ISSUED FOR MANUFACTURE		MRM	17/03/2009	RTW

DO NOT SCALE DRAWING

TITLE: REGULATOR, PRESSURE, 0 - 1500psi
PRODUCT / PROJECT No.: PRESSURE REGULATOR
PART No.: RP202
DRAWING No.: 81321S1
SIZE: A3 | SCALE: NTS | SHEET 1 OF 1 | REV: R00

DIVEX
DIVEX LIMITED
ENTERPRISE DRIVE
WESTHILL
ABERDEEN
AB32 6TQ
UNITED KINGDOM

Tel : +44(0)1224 740145
Fax : +44(0)1224 740172
email : info@divexglobal.com
www.divexglobal.com

Regulator, Pressure, 0 - 1500 psi P1805101S1

ITEM NO.	PART NO.	DESCRIPTION	QTY.	(SPARES) 389-1875	
1	1088-2	VALVE CAP	1	-	
2	5476-10100	BACK-UP RING, TEFLON	1	1	
3	5200-020107	O-RING, VITON	1	1	
4	1087-2	RETAINING PLATE	1	-	
5	6871-20560	RETAINING RING	1	-	
6	1206-6	WASHER	1	-	
7	1094	VALVE SPRING	1	1	
8	1085-2	VALVE	1	-	
9	JT1199	VALVE SEAT, CTFE	1	1	2
10	1081-8	VALVE CAP, S.S.	1	1	
11	1080-2	ORIFICE	1	-	
12	5200-029089	O-RING, VITON	1	1	
13	5450-20812	REGULATOR BODY	1	-	
14	5446-4	VENTURI TUBE	1	-	
15	5447-2	CONNECTOR	1	-	
16	9058	WASHER	1	-	
17	5948-2	VENT VALVE ROD	1	-	
18	5945-1	BONNET	1	-	
19	1051	LOAD SPRING	1	-	
20	40942	SPRING CAP ASSEMBLY	1	-	
21	5425	THRUST WASHER	1	-	
22	5424	THRUST BEARING	1	-	
23	5426	THRUST WASHER	1	-	
24	5397-6	HANDKNOB	1	-	
25	6320	LABEL	1	-	
26	5432	PLUG	1	-	
27	5401-14328	SCREW	1	-	
28	5427	RETAINING RING	1	-	
29	2776	SPRING	1	-	
30	5401-211686	LIMIT SCREW	1	-	
31	5153	VENT LABEL	1	-	
32	5445-1	PLATE	1	-	
33	9025-2	BACK-UP, SENSOR	1	-	2
34	9020-2	SENSOR	1	-	2
35	1522-2	SEAT RETAINER	1	-	
36	1036	VENT VALVE SEAT, CTFE	1	1	
37	1023-2	VENT VALVE, S.S.	1	1	
38	1022	SPRING, S.S.	1	1	
39	5200-021187	O-RING, VITON	1	1	
40	5200-020297	O-RING, VITON	1	1	
41	60079	DATA PLATE	1	-	
42	9023-2	WASHER	1	-	

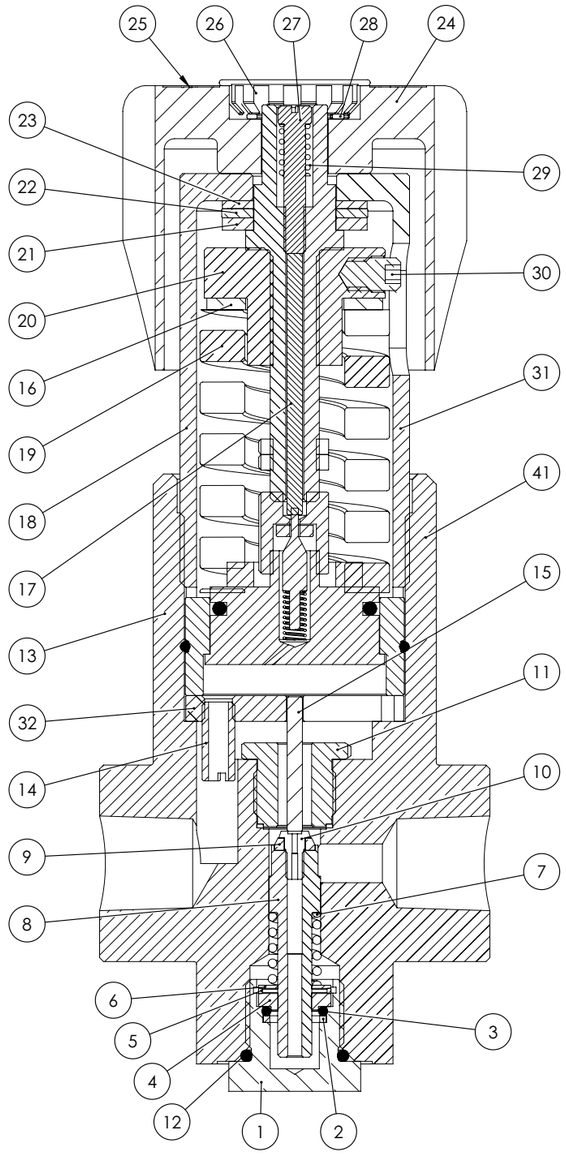

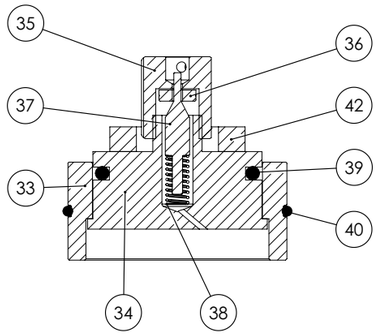

SENSOR ASSEMBLY

NOTES:

1. INLET PRESSURE RANGE : 0-3750psi (0-255bar)
2. OUTLET PRESSURE RANGE : 0-1500psi (0-100bar)
3. REPAIR KIT PART No. : 389-1875 (SEE TABLE)
4. JFD PART No. : RK204

2 DENOTES CHANGES MADE AT THIS REVISION

REV	DESCRIPTION	ECN	BY	DATE	AUTH.
R03					
R02	ITEMS 9, 33 & 34 UPDATED	27576	JR	19/07/21	AB
R01	MODEL & PARTS LIST UPDATED	17328	JR	12/01/15	SC
R00	ISSUED FOR MANUFACTURE		MRM	05/03/09	JM

THIRD ANGLE PROJECTION

DO NOT SCALE DRAWING

JFD OWNS THE COPYRIGHT OF THIS DOCUMENT AND ANY DESIGN RIGHT HEREIN. IT IS SUPPLIED IN CONFIDENCE AND MUST NOT BE USED FOR ANY PURPOSE OTHER THAN THAT FOR WHICH IT IS SUPPLIED AND MUST NOT BE REPRODUCED WITHOUT PERMISSION IN WRITING FROM THE OWNERS.

TITLE: **REGULATOR, PRESSURE, 0 - 1500PSI**

DRAWING NO. **P1805101S1** REV **R02**

PART NO. RP404 PRODUCT / PROJECT No. P1805

SIZE A3 SCALE (UOS) 1:1 SHEET 1 OF 1

JFD WESTHILL
ENTERPRISE DRIVE,
WESTHILL, ABERDEEN,
AB32 6TQ, UK

TEL: +44 (0)1224 740145
E: enquiries@jfdglobal.com
W: jfdglobal.com

P&ID, Gas Booster, Gasmizer System P1805904S1

Sheet 1 of 3

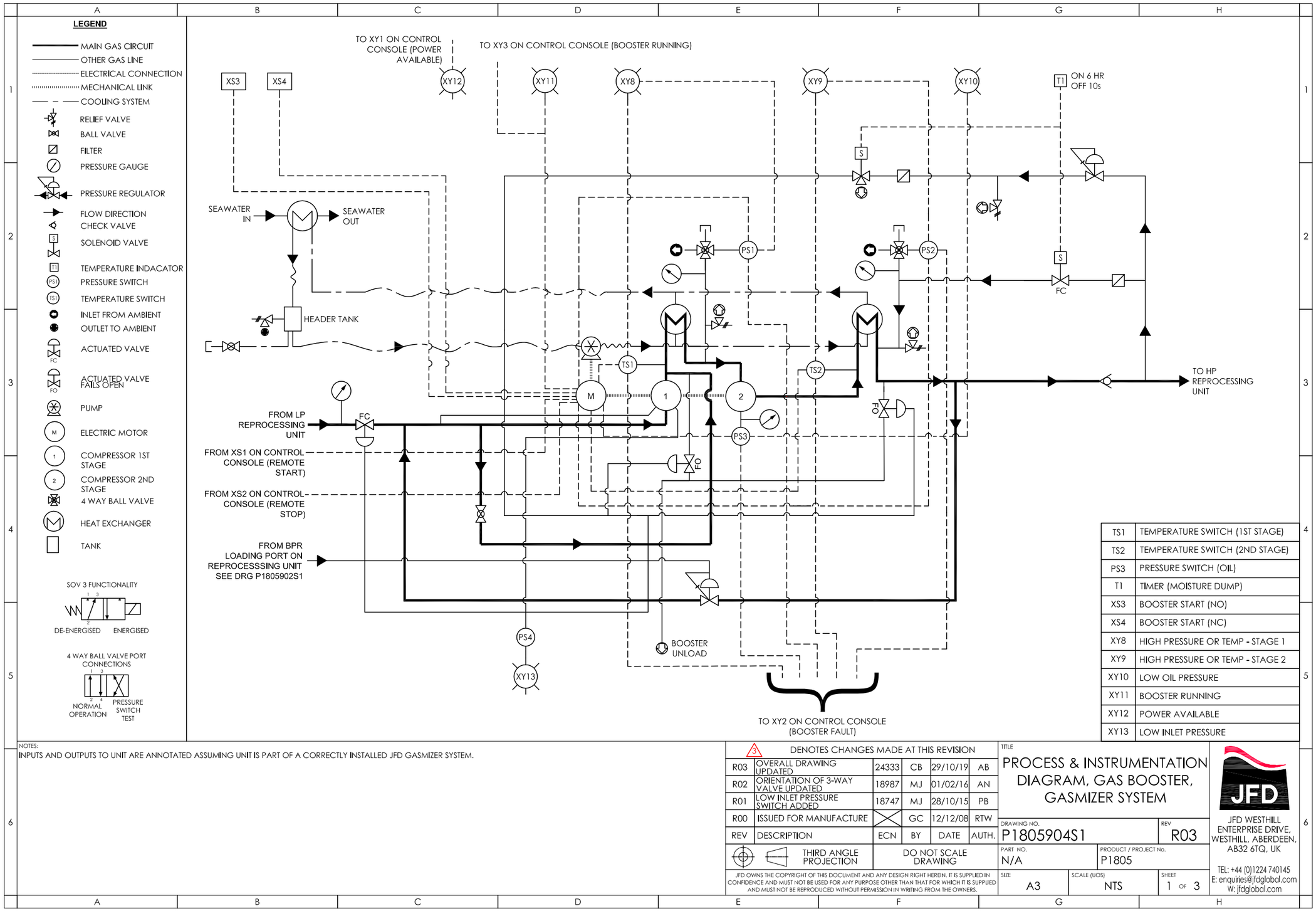

TS1	TEMPERATURE SWITCH (1ST STAGE)
TS2	TEMPERATURE SWITCH (2ND STAGE)
PS3	PRESSURE SWITCH (OIL)
T1	TIMER (MOISTURE DUMP)
XS3	BOOSTER START (NO)
XS4	BOOSTER START (NC)
XY8	HIGH PRESSURE OR TEMP - STAGE 1
XY9	HIGH PRESSURE OR TEMP - STAGE 2
XY10	LOW OIL PRESSURE
XY11	BOOSTER RUNNING
XY12	POWER AVAILABLE
XY13	LOW INLET PRESSURE

NOTES:
INPUTS AND OUTPUTS TO UNIT ARE ANNOTATED ASSUMING UNIT IS PART OF A CORRECTLY INSTALLED JFD GASMIZER SYSTEM.

3 DENOTES CHANGES MADE AT THIS REVISION

REV	DESCRIPTION	ECN	BY	DATE	AUTH.
R03	OVERALL DRAWING UPDATED	24333	CB	29/10/19	AB
R02	ORIENTATION OF 3-WAY VALVE UPDATED	18987	MJ	01/02/16	AN
R01	LOW INLET PRESSURE SWITCH ADDED	18747	MJ	28/10/15	PB
R00	ISSUED FOR MANUFACTURE		GC	12/12/08	RTW

THIRD ANGLE PROJECTION

DO NOT SCALE DRAWING

JFD OWNS THE COPYRIGHT OF THIS DOCUMENT AND ANY DESIGN RIGHT HEREIN. IT IS SUPPLIED IN CONFIDENCE AND MUST NOT BE USED FOR ANY PURPOSE OTHER THAN THAT FOR WHICH IT IS SUPPLIED AND MUST NOT BE REPRODUCED WITHOUT PERMISSION IN WRITING FROM THE OWNERS.

TITLE
PROCESS & INSTRUMENTATION DIAGRAM, GAS BOOSTER, GASMIZER SYSTEM

DRAWING NO. P1805904S1
REV R03
PART NO. N/A
PRODUCT / PROJECT No. P1805
SIZE A3
SCALE (UOS) NTS
SHEET 1 OF 3

JFD WESTHILL
ENTERPRISE DRIVE,
WESTHILL, ABERDEEN,
AB32 6TQ, UK
TEL: +44 (0)1224 740145
E: enquiries@jfdglobal.com
W: jfdglobal.com

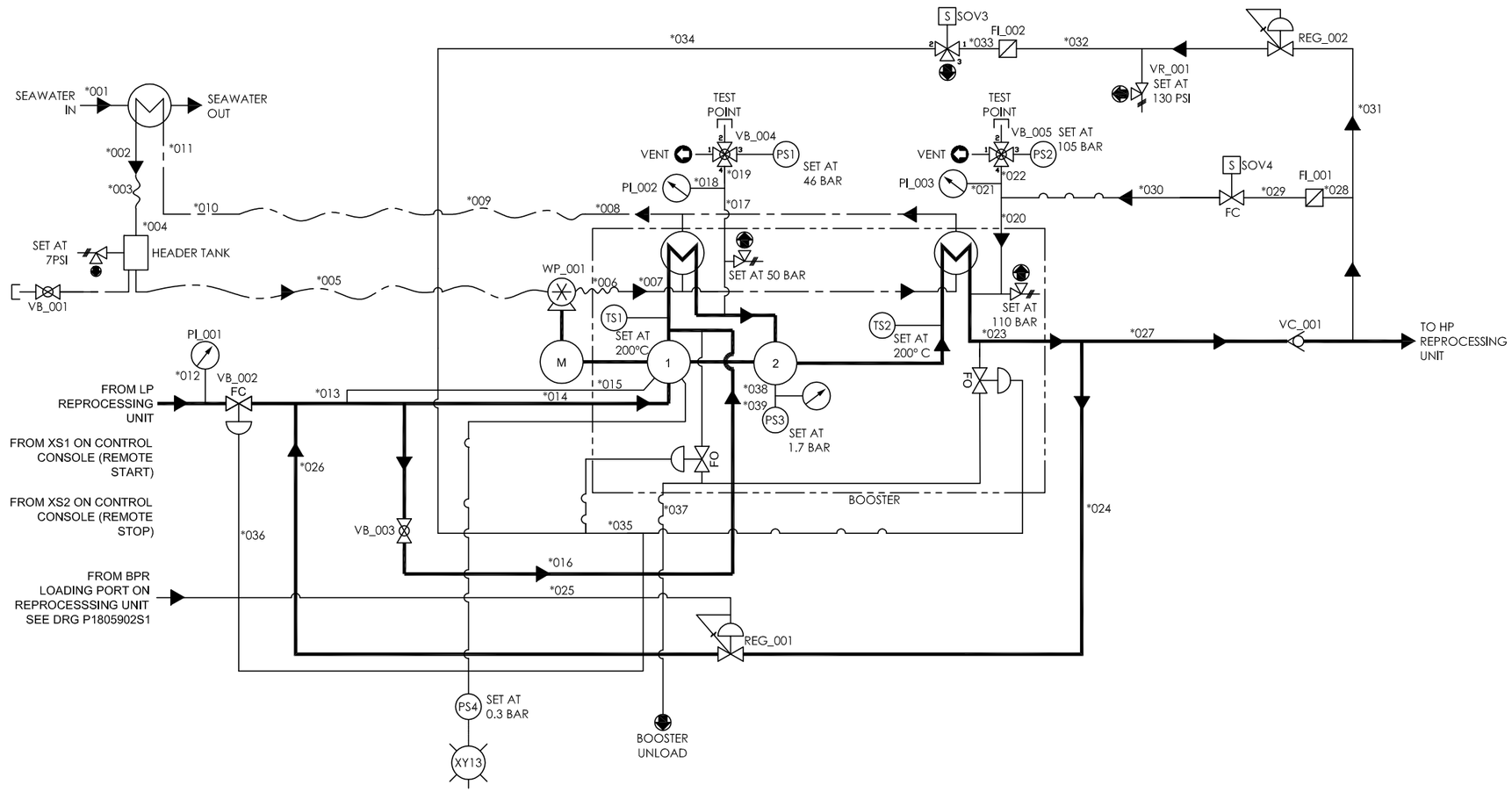

NOTES:
INPUTS AND OUTPUTS TO UNIT ARE ANNOTATED ASSUMING UNIT IS PART OF A CORRECTLY INSTALLED JFD GASMIZER SYSTEM.

3 DENOTES CHANGES MADE AT THIS REVISION

REV	DESCRIPTION	ECN	BY	DATE	AUTH.
R03	OVERALL DRAWING UPDATED	24333	CB	29/10/19	AB
R02	ORIENTATION OF 3-WAY VALVE UPDATED	18987	MJ	01/02/16	AN
R01	LOW INLET PRESSURE SWITCH ADDED	18747	MJ	28/10/15	PB
R00	ISSUED FOR MANUFACTURE		GC	12/12/08	RTW

THIRD ANGLE PROJECTION

DO NOT SCALE DRAWING

JFD OWNS THE COPYRIGHT OF THIS DOCUMENT AND ANY DESIGN RIGHT HEREIN. IT IS SUPPLIED IN CONFIDENCE AND MUST NOT BE USED FOR ANY PURPOSE OTHER THAN THAT FOR WHICH IT IS SUPPLIED AND MUST NOT BE REPRODUCED WITHOUT PERMISSION IN WRITING FROM THE OWNERS.

TITLE
PROCESS & INSTRUMENTATION DIAGRAM, GAS BOOSTER, GASMIZER SYSTEM

DRAWING NO. P1805904S2
REV R03
PART NO. N/A
PRODUCT / PROJECT No. P1805
SIZE A3
SCALE (UOS) NTS
SHEET 2 OF 3

JFD WESTHILL
ENTERPRISE DRIVE,
WESTHILL, ABERDEEN,
AB32 6TQ, UK

TEL: +44 (0)1224 740145
E: enquiries@jfdglobal.com
W: jfdglobal.com

Line Table

Line No.	Size	Wall Thickness	Material	Media	WP (Bar)	Hydro Test (Bar)	Process Description
*.001	30mm	2mm	316 S/S	See Water	N/A	N/A	See Water Supply
*.002	22mm		Copper	Water/Glycol	N/A	N/A	Cooling Fluid Return
*.003	7/8" bore			Water/Glycol	N/A	N/A	Cooling Fluid Return
*.004	22mm		Copper	Water/Glycol	N/A	N/A	Cooling Fluid Return
*.005	1" bore			Water/Glycol	N/A	N/A	Cooling Fluid Supply
*.006	1" bore			Water/Glycol	N/A	N/A	Cooling Fluid Supply
*.007	22mm		Copper	Water/Glycol	N/A	N/A	Cooling Fluid Supply
*.008	22mm		Copper	Water/Glycol	N/A	N/A	Cooling Fluid Return
*.009	33mm	4mm	Clear Braided Hose	Water/Glycol	N/A	N/A	Cooling Fluid Return
*.010	22mm		Copper	Water/Glycol	N/A	N/A	Cooling Fluid Return
*.011	22mm		Copper	Water/Glycol	N/A	N/A	Cooling Fluid Return
*.012	6mm	1mm	316 S/S	Heliox	44	66	Inlet, Pressure Gauge
*.013	30mm	2mm	316 S/S	Heliox	44	66	Inlet, Common
*.014	30mm	2mm	316 S/S	Heliox	44	66	Inlet, Common
*.015	30mm	2mm	316 S/S	Heliox	44	66	Packing Line
*.016	22mm	2mm	316 S/S	Heliox	44	66	1st Stage By-Pass
*.017	6mm	1mm	316 S/S	Heliox	44	66	Intercooler Side Line, Common
*.018	6mm	1mm	316 S/S	Heliox	44	66	Intercooler Side Line, Interstage Pressure Gauge
*.019	6mm	1mm	316 S/S	Heliox	44	66	Intercooler Side Line, 1st Stage Pressure Switch
*.020	6mm	1mm	316 S/S	Heliox	100	150	Backfill Line
*.021	6mm	1mm	316 S/S	Heliox	100	150	Backfill Line, Outlet Pressure Gauge
*.022	6mm	1mm	316 S/S	Heliox	100	150	Backfill Line, 2nd Stage Pressure Switch
*.023	22mm	2mm	316 S/S	Heliox	100	150	Outlet
*.024	22mm	2mm	316 S/S	Heliox	100	150	Circulating Loop
*.025	6mm	1mm	316 S/S	Heliox	44	66	BRP Loader
*.026	30mm	2mm	316 S/S	Heliox	44	66	Circulating Loop
*.027	22mm	2mm	316 S/S	Heliox	100	150	Outlet
*.028	6mm	1mm	316 S/S	Heliox	100	150	Backfill Line
*.029	6mm	1mm	316 S/S	Heliox	100	150	Backfill Line
*.030	6mm	1mm	316 S/S	Heliox	100	150	Backfill Line
*.031	6mm	1mm	316 S/S	Heliox	100	150	Unloader/Inlet Command
*.032	6mm	1mm	316 S/S	Heliox	8	N/A	Unloader/Inlet Command
*.033	6mm	1mm	316 S/S	Heliox	8	N/A	Unloader/Inlet Command
*.034	6mm	1mm	316 S/S	Heliox	8	N/A	Unloader/Inlet Command
*.035	6mm	1mm	316 S/S	Heliox	8	N/A	Unloader/Inlet Command
*.036	6mm	1mm	316 S/S	Heliox	8	N/A	Unloader/Inlet Command
*.037	22mm		Cooper	Water	N/A	N/A	Unloader Exhaust
*.038	6mm	1mm	316 S/S	Oil	N/A	N/A	Booster Oil System, Pressure Switch/Gauge
*.039	6mm	1mm	316 S/S	Oil	N/A	N/A	Booster Oil System, Pressure Gauge

Component Table

Equip. Tag	Description	JFD Part No.	Material	Pressure/Temp Rating
VB_001	VALVE, BALL, 3/8" BSP FEMALE, LG HANDLE, PANEL MNT	VB214	Nickel Plated Brass	20 bar MWP -20 to 80° C
VB_002	VALVE, INLET SHUT OFF, C/W ACTUATOR	GE113	316 S/S	69 bar @ 70° C
VB_003	VALVE, BALL, 43123	GC225	CF8M	69 bar @ 100° C
VB_004	VALVE, BALL, 4 PORT, 2 POSITION, 1/8" NPT, BRASS	VB25427	Brass	172 bar @ 37° C
VB_005	VALVE, BALL, 4 PORT, 2 POSITION, 1/8" NPT, BRASS	VB25427	Brass	172 bar @ 37° C
VB_006	VALVE, BALL, 3/4" FM NPT, 580 PSI MAX	VB602	Brass	40 bar
VC_001	VALVE,CHECK, 1/2"BSPP FM, 3000 PSI WP, MODIFIED	VC420	Brass	207 bar
SOV3	VALVE, SOLENOID, UNLOADER,(W/COIL NOL111P3)	B10510312	430F S/S	28 bar MOPD 85° C Max
SOV4	VALVE, SOLENOID, 110V/50HZ, 1/4"FNPT	GE087	430F S/S	103 bar MOPD 85° C Max
VR_001	SAFETY RELIEF VALVE 130PSI	B10510314	Brass	9 bar -15° to 200° C
WP_001	EGC, WATER PUMP	GC271	Bronze	
PI_001	GAUGE, PANEL, CLAMP, 63MM, 0-1000PSI	GP269	316 S/S	69 bar 100° C Max
PI_002	GAUGE, PANEL, CLAMP, 63MM, 0-1000PSI	GP269	316 S/S	69 bar 100° C Max
PI_003	GAUGE, 63MM, 0-1600PSI, 1/4" MNPT REAR ENTRY	GP268	316 S/S	110 bar 100° C Max
PI_004	GAUGE, PRESS, 2.5",0-160PSI, PM, REAR 1/4" MNPT	GP258	316 S/S	11 bar 100° C Max
PS1	SWITCH, 1ST STAGE PRESSURE	B10510313	12L14 Zinc Plated Steel	17 - 69 bar -9° to 85° C
PS2	SWITCH, HP CUT OUT, 2ND STAGE	GE100	12L14 Zinc Plated Steel	69 - 207 bar -9° to 85° C
PS4	SWITCH, PRESS, G1/4", SUCO, SET TO 0.3 BAR	B10510335	Zinc Plated Steel	0.3 - 1.5 bar -30° to 100° C
REG_001	REGULATOR, BYPASS, GAS BOOSTER	GE040	Brass	414 bar Max Inlet / 3.4 - 103 bar Outlet -26° to 74° C
REG_002	PRESSURE CONTROL VALVE, PARKER VERIFLOW	B10510311	316L S/S	276 bar Max Inlet / 0.7 - 17 bar Outlet -40° to 66° C
FI_001	FLTR, 6 MM TUBE, 60 MICRON, TEE-TYPE	FA011	316 S/S	413 bar MWP @ 37° C
FI_002	FLTR, 6 MM TUBE, 60 MICRON, TEE-TYPE	FA011	316 S/S	413 bar MWP @ 37° C

NOTES:
INPUTS AND OUTPUTS TO UNIT ARE ANNOTATED ASSUMING UNIT IS PART OF A CORRECTLY INSTALLED JFD GASMIZER SYSTEM.

3 DENOTES CHANGES MADE AT THIS REVISION

REV	DESCRIPTION	ECN	BY	DATE	AUTH.
R03	OVERALL DRAWING UPDATED	24333	CB	29/10/19	AB
R02	ORIENTATION OF 3-WAY VALVE UPDATED	18987	MJ	01/02/16	AN
R01	LOW INLET PRESSURE SWITCH ADDED	18747	MJ	28/10/15	PB
R00	ISSUED FOR MANUFACTURE		GC	12/12/08	RTW

THIRD ANGLE PROJECTION

DO NOT SCALE DRAWING

JFD OWNS THE COPYRIGHT OF THIS DOCUMENT AND ANY DESIGN RIGHT HEREIN. IT IS SUPPLIED IN CONFIDENCE AND MUST NOT BE USED FOR ANY PURPOSE OTHER THAN THAT FOR WHICH IT IS SUPPLIED AND MUST NOT BE REPRODUCED WITHOUT PERMISSION IN WRITING FROM THE OWNERS.

TITLE
PROCESS & INSTRUMENTATION DIAGRAM, GAS BOOSTER, GASMIZER SYSTEM

DRAWING NO. P1805904S3
REV R03
PART NO. N/A
PRODUCT / PROJECT No. P1805
SIZE A3
SCALE (UOS) NTS
SHEET 3 OF 3

JFD WESTHILL
ENTERPRISE DRIVE,
WESTHILL, ABERDEEN,
AB32 6TQ, UK

TEL: +44 (0)1224 740145
E: enquiries@jfdglobal.com
W: jfdglobal.com

Pipework, Main Gas Circuit, B10510AA Booster B10510101S1

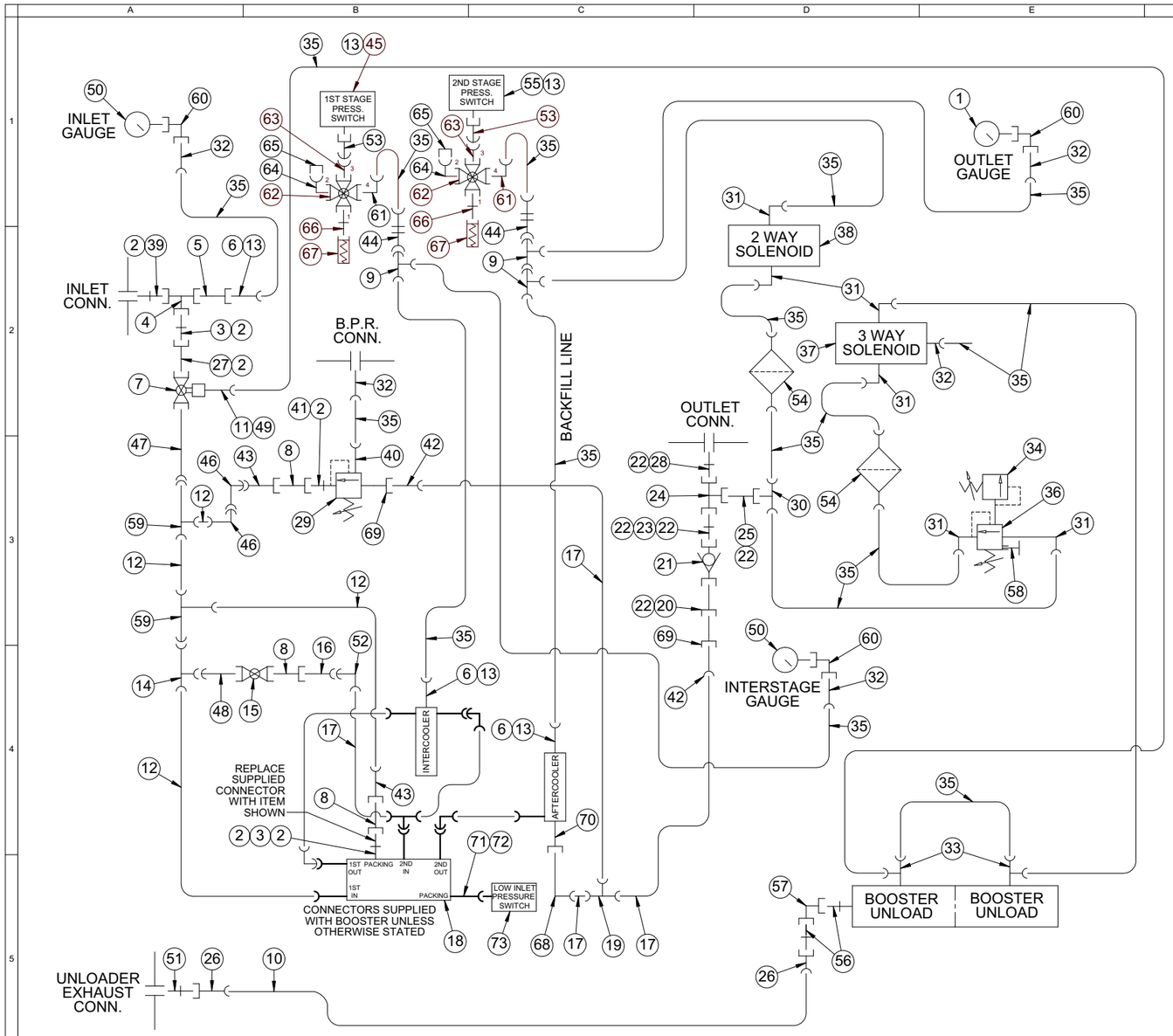

ITEM NO.	DESCRIPTION	PART No.	QTY.	MATERIAL	M.A.W.P. (BAR)
1	GAUGE, 63MM, 0-1600PSI, 1/4" MNPT REAR ENTRY	GP268	1	-	-
2	SEAL, BONDED, 3/4" BSP	DD401125	5	-	-
3	ADAPTOR, 3/4" BSP M X 3/4" BSP M	DD400014	2	CARBON STEEL	240
4	TEE, 3/4" BSPP FIXED FEMALE	DD401876	1	CARBON STEEL	240
5	ADAPTOR, 3/4" BSP M X 1/4" BSP F, FORM B	DD400854	1	ZINC PLATED STEEL	315
6	STUD, 6L X 1/4" BSP M, ED SEAL	DD400531	3	CARBON STEEL	250
** 7	VALVE, INLET SHUT OFF, C/W ACTUATOR	GE113	REF	316 SS	100
8	ADAPTOR, 1 1/4" BSP M X 3/4" BSP F, FORM B	DD400856	3	ZINC PLATED STEEL	315
9	TEE, SWIVEL RUN, 6S	DD400158	3	CARBON STEEL	630
10	TUBE, COPPER, 22MM	KI19095	6ft	COPPER	51
11	STUD, 6L X 1/8" BSP M, ED TYPE	DD400533	1	CARBON STEEL	250
12	TUBE, SEAMLESS, SS316, 30MM OD X 2MM WALL	TM802	6m	316 SS	140
13	SEAL, BONDED, 1/4" BSP ST. STEEL, SELF CENTRING	DD401128	5	-	-
14	TEE, EQUAL, 30S	DD400926	1	CARBON STEEL	250
** 15	VALVE, BALL, 43123	GC225	REF	CF8M	69
16	STUD, 22L X 3/4" BSP M, FORM B	DD400450	1	CARBON STEEL	160
17	TUBE, SEAMLESS, SS316, 22MM OD X 2MM WALL	TM803	3m	316 SS	190
** 18	COMPRESSOR, K651/454, GASMIZER	B10510300	REF	-	-
19	TEE, UNION, 22MM TUBE, SS	FS617	1	316 SS	340
20	ADAPTOR, 1/2" (M)BSPP-1/2" (F)NPT, SS316, 337 BAR	FP28797	1	316 SS	324
** 21	VALVE, CHECK, 1/2" BSPP FM, 3000PSI WP, MODIFIED	VC420	REF	BRASS	207
22	SEAL, BONDED, 1/2" BSP SELF CENTRING, CARBON ST.	DD401123	5	-	-
23	ADAPTOR, 1/2" BSP M X 1/2" BSP M	DD400017	1	CARBON STEEL	310
24	TEE, 1/2" BSPP FIXED FEMALE	DD401874	1	CARBON STEEL	310
25	BUSH, REDUCING, 1/2" BSP-M X 1/4" NPT FEMALE	DD401156	1	CARBON STEEL	310
26	COUPLING, FEMALE, 22MM X 3/4" BSP, KUTERLITE	KI11182	2	COPPER	10
27	ADAPTOR, 3/4" BSP SWIVEL FEMALE X 3/4" BSP MALE	DD401705	1	CARBON STEEL	240
28	ADAPTOR, 1/2" BSP M X 1/2" NPT M	DD400001	1	CARBON STEEL	310
** 29	REGULATOR, BYPASS, GAS BOOSTER	GE040	REF	BRASS	414
30	TEE, MALE BRANCH, 6S X 1/4" NPT	DD400946	1	CARBON STEEL	630
31	ELBOW, STUD, 6L X 1/4" NPT M	DD401075	6	CARBON STEEL	250
32	STUD, 6L X 1/4" NPT M	DD400518	5	CARBON STEEL	250
33	TEE, RUN, 6S X 1/4" NPT MALE	DD400763	2	CARBON STEEL	630
** 34	VALVE, SAFETY RELIEF, 130PSI	B10510314	REF	BRASS	21
35	TUBE, 6MM X 1.0 W.T. ST. STEEL 316	DD310323/1	6m	316 SS	370
** 36	VALVE, PRESSURE CONTROL, PARKER VERIFLOW	B10510311	REF	316 SS	275
** 37	VALVE, SOLENOID, UNLOADER, (W/COIL NOL111P3)	B10510312	REF	316 SS	28
** 38	VALVE, SOLENOID, 110V50HZ, 1/4" FNPT	GE087	REF	316 SS	103
39	FTG, NIPPLE, 3/4" NPT X 3/4" BSPP	FP644	1	CARBON STEEL	414
40	STUD, 6L X 1/8" NPT M	DD400519	1	CARBON STEEL	250
41	FTG, NIPPLE, 1/2" NPT X 3/4" BSPP	FP643	1	CARBON STEEL	414
42	ADAPTOR, 3/4" NPT(M) - 22MM TUBE, SS	FS618	2	316 SS	340
43	STUD, 30S X 1 1/4" BSP F	DD400251	2	CARBON STEEL	250
44	BULKHEAD, 6S	DD400901	2	CARBON STEEL	630
** 45	SWITCH, 1ST STAGE PRESSURE	B10510313	REF	-	-
46	ELBOW, SWIVEL, 30S	DD400193	2	CARBON STEEL	250
47	STUD, 30S X 3/4" BSP M, CONED	DD400484	1	CARBON STEEL	250
48	STUD, STANDPIPE, 30S X 1 1/4" BSP M	DD400125	1	CARBON STEEL	250
49	SEAL, BONDED, 1/8" BSP SELF CENTRING	DD401120	1	-	-
50	GAUGE, PANEL, CLAMP, 63MM, 0-1000PSI	GP269	2	-	-
51	NIPPLE, HEX, 3/4" NPT MALE X 3/4" BSPT MALE	FP630	1	BRASS	155
52	ELBOW, SWIVEL, 22L	DD400190	1	CARBON STEEL	160
53	COUPLING, GAUGE, 1/4" BSP X 6S STANDPIPE	DD400820	2	CARBON STEEL	630
54	FILTER, 6MM TUBE, 60 MICRON, TEE-TYPE	FA011	2	316 SS	355
55	SWITCH, HP CUT OUT, 2ND STAGE	GE100	REF	-	-
56	NIPPLE, HEX 3/4" BSPT 316SS	E14559	2	316 SS	16
57	ELBOW, 3/4" (F)BSPT 316SS	E14562	1	316 SS	16
58	PLUG, HEX HEAD, 1/4" MNPT, SS, WP551BAR	FP290	1	316 SS	517
59	TEE, SWIVEL RUN, 30S	DD400153	2	CARBON STEEL	250
60	ELBOW, FEMALE-FEMALE, 1/4" NPT, BRASS	FP215	3	BRASS	221
61	ELBOW, STUD, 6L X 1/8" NPT M	DD401076	2	CARBON STEEL	250
62	VALVE, BALL, 4 PORT, 2 POSITION, 1/8" NPT, BRASS	VB25427	2	BRASS	172
63	STUD, 6S X 1/8" NPT M	DD401996	2	ZINC PLATED STEEL	630
64	ELBOW, MALE, 4JIC-1/8" MNPT, BRASS	FJ207	2	BRASS	228
65	CAP, 4-JIC, BRASS, MWP227BAR	FJ201	2	BRASS	228
66	NIPPLE, HEX, 1/4" MNPT-1/8" MNPT	FP209	2	BRASS	269
67	SILENCER/MUFFLER, 1/4" NPT(F)	DD315007	2	-	-
68	ELBOW, 3/4" NPT(M) - 22MM TUBE, SS	FS619	1	316 SS	340
69	ADAPTOR, REDUCING, 3/4" NPT(F) - 1/2" NPT(M), SS	FS620	2	316 SS	316
70	ADAPTOR, ST. STEEL, 3/4" BSP M X 3/4" NPT F	DD405024	1	316 SS	160
71	ADAPTOR, 3/4" BSP M X 1/4" BSP F, FORM B	DD400854	1	ZINC PLATED STEEL	315
72	SEAL, BONDED, 1/4" BSP ST. STEEL, SELF CENTRING	DD401128	1	-	-
73	SWITCH, PRESS, G1/4", SUCO, SET TO 0.3 BAR	B10510335	1	-	-

** - REFER TO MAIN ASSY BOM

NOTES:

MATERIAL: SEE PARTS LIST

FINISH: N/A

ALL DIMENSIONS ARE IN mm (UOS)
ALL DIMENSIONS BEFORE PLATING (UOS)
REMOVE ALL SHARP EDGES AND BURRS

MACHINING TOLERANCE		FABRICATION TOLERANCE	
NO DECIMAL PLACE	±1.0	>0 <100	±0.5
ONE DECIMAL PLACE	±0.2	>100 <500	±1.5
TWO DECIMAL PLACE	±0.05	>500	±3.0
ANGULAR TOLERANCE	±0.5°		

DENOTES CHANGES MADE AT THIS REVISION

REV	DESCRIPTION	ECN	BY	DATE	AUTH.
R08	VARIOUS BOM UPDATES	24526	SR	05/12/19	AB
R07	PARTS LIST UPDATED	18747	MJ	28/10/15	PB
R06	PARTS LIST UPDATED	16617	MJ	21/07/14	MS
R00	ISSUED FOR MANUFACTURE		MS	26/08/04	JM

THIRD ANGLE PROJECTION

DO NOT SCALE DRAWING

JFD OWNS THE COPYRIGHT OF THIS DOCUMENT AND ANY DESIGN RIGHT HEREIN. IT IS SUPPLIED IN CONFIDENCE AND MUST NOT BE USED FOR ANY PURPOSE OTHER THAN THAT FOR WHICH IT IS SUPPLIED AND MUST NOT BE REPRODUCED WITHOUT PERMISSION IN WRITING FROM THE OWNERS.

TITLE: **PIPEWORK, MAIN GAS CIRCUIT, B10510AA BOOSTER**

DRAWING NO.: **B10510101S1** REV: **R08**

PART NO.: B10510101 PRODUCT / PROJECT No.: B10510AA

SIZE: A2 SCALE (UOS): NTS SHEET: 1 or 1

JFD
JFD WESTHILL
ENTERPRISE DRIVE,
WESTHILL, ABERDEEN,
AB32 6TQ, UK
TEL: +44 (0)1224 740145
E: enquiries@jfdglobal.com
W: jfdglobal.com

Starter Panel Schematic, Gas Booster B510105

Sheet 1 of 3

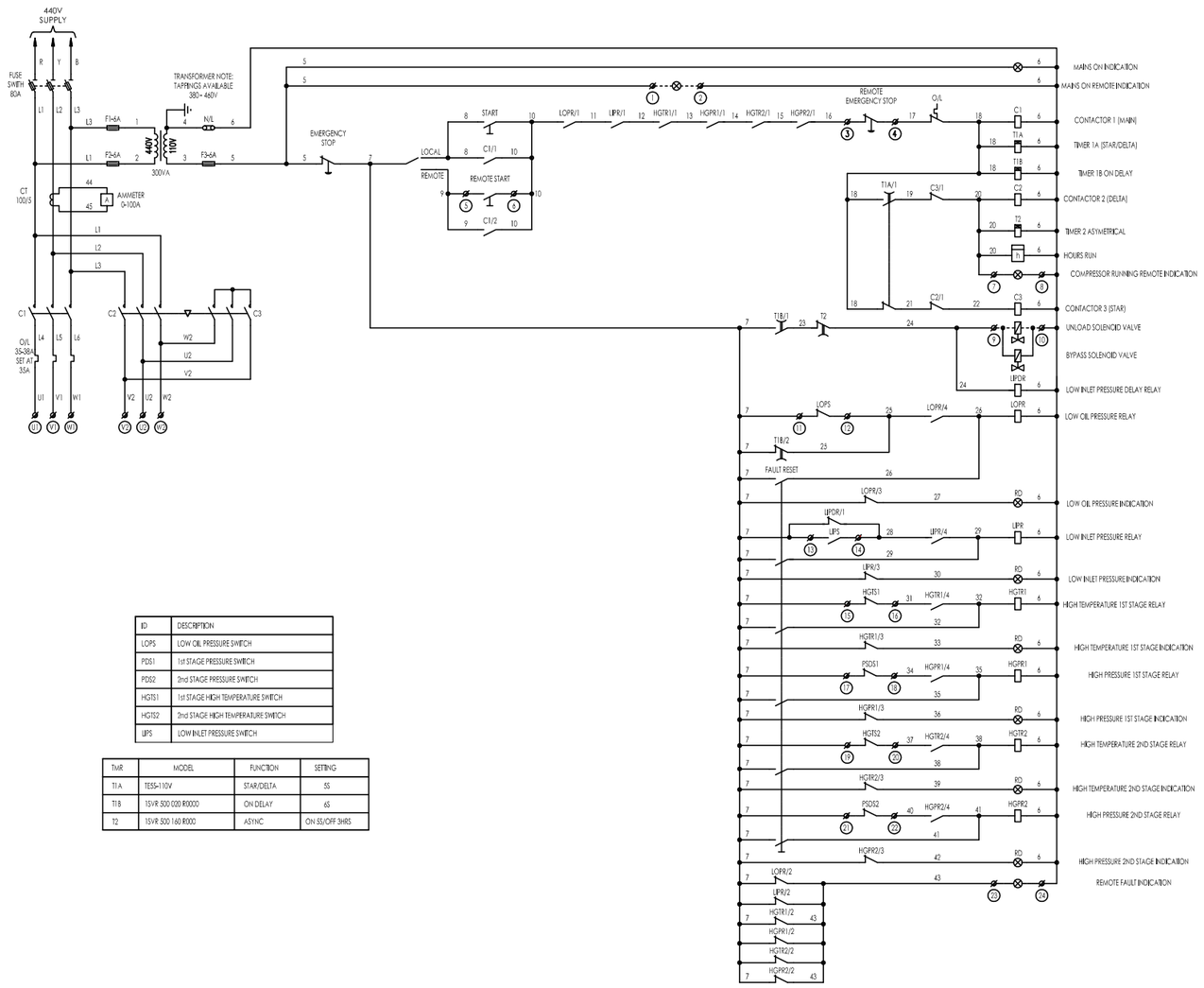

ID	DESCRIPTION
LOPS	LOW OIL PRESSURE SWITCH
PDS1	1st STAGE PRESSURE SWITCH
PDS2	2nd STAGE PRESSURE SWITCH
HGTS1	1st STAGE HIGH TEMPERATURE SWITCH
HGTS2	2nd STAGE HIGH TEMPERATURE SWITCH
LIPS	LOW INLET PRESSURE SWITCH

TMR	MODEL	FUNCTION	SETTING
T1A	TE55-110V	STAR/DELTA	5S
T1B	15VR 500 020 R0000	ON DELAY	6S
T2	15VR 500 160 R000	ASYNC	ON 5S/OFF 3HRS

NOTES:

MATERIAL N/A

FINISH N/A

ALL DIMENSIONS ARE IN mm (UOS)
ALL DIMENSIONS BEFORE PLATING (UOS)
REMOVE ALL SHARP EDGES AND BURRS

MACHINING TOLERANCE		FABRICATION TOLERANCE	
NO DECIMAL PLACE	±1.0	>0 <100	±0.5
ONE DECIMAL PLACE	±0.2	>100 <500	±1.5
TWO DECIMAL PLACE	±0.05	>500	±3.0
ANGULAR TOLERANCE	±0.5°		

△1 DENOTES CHANGES MADE AT THIS REVISION

REV	DESCRIPTION	ECN	BY	DATE	AUTH.
R07	SEE SHEET 3	24333	CB	13/11/19	AB
R06	VOLTAGE UPDATED	21530	JR	02/11/17	AN
R05	SEE SHEET 3	18998	ZD	15/03/16	MH
R00	ISSUED FOR MANUFACTURE		GDB	18/06/08	JM

THIRD ANGLE PROJECTION

DO NOT SCALE DRAWING

JFD OWNS THE COPYRIGHT OF THIS DOCUMENT AND ANY DESIGN RIGHT HEREIN. IT IS SUPPLIED IN CONFIDENCE AND MUST NOT BE USED FOR ANY PURPOSE OTHER THAN THAT FOR WHICH IT IS SUPPLIED AND MUST NOT BE REPRODUCED WITHOUT PERMISSION IN WRITING FROM THE OWNERS.

TITLE: STARTER PANEL SCHEMATIC, GAS BOOSTER

DRAWING NO. B510105S1 REV R07

PART NO. B10510303

PRODUCT / PROJECT No. GASMIZER

SIZE A2 SCALE (UOS) NTS SHEET 1 OF 3

JFD WESTHILL
ENTERPRISE DRIVE,
WESTHILL, ABERDEEN,
AB32 6TQ, UK
TEL: +44 (0)1224 740145
E: enquiries@jfdglobal.com
W: jfdglobal.com

CONTROL EQUIPMENT ITEM IDENTIFICATION

1. HI TEMP. STAGE 1
2. HI PRESSURE STAGE 1
3. HI PRESSURE STAGE 2
4. 2-WAY SOLENOID
5. 3-WAY SOLENOID
6. OIL PRESSURE
7. NB:- HI TEMP. STAGE 2 IN SIMILAR POSITION AS ITEM 1 BUT ON REAR

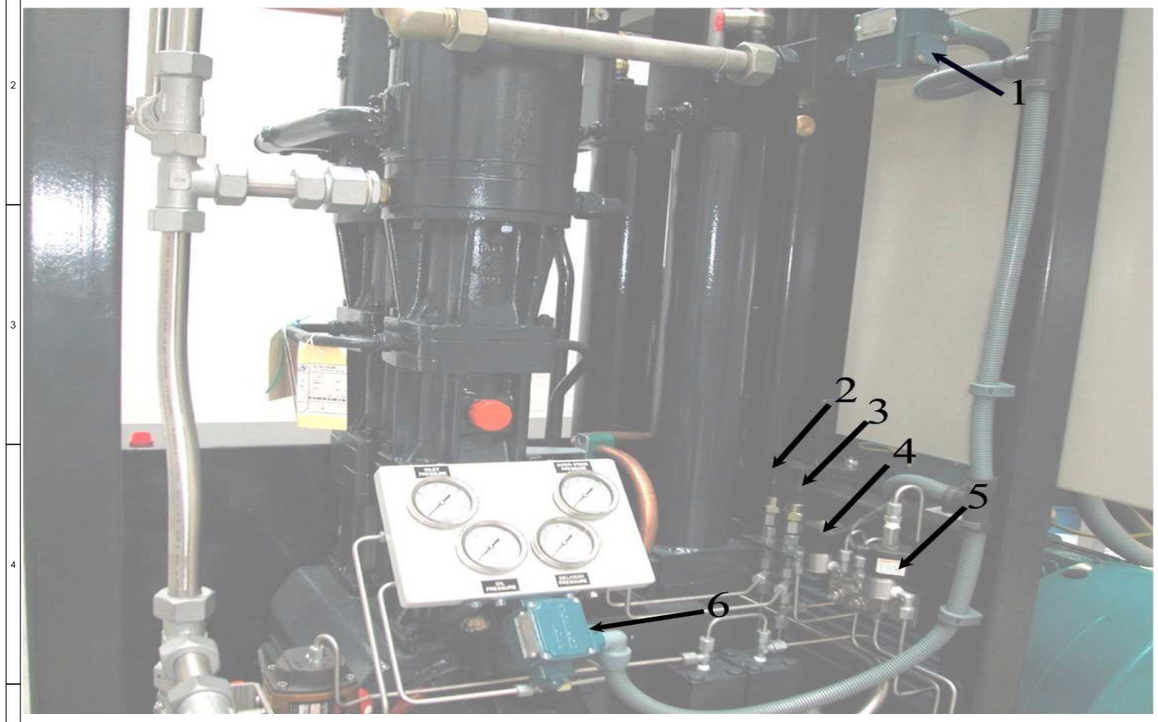

B.O.M. B10510105 (DGR-A1)

ITEM NO	PART NO	DESCRIPTION	QTY
1	B10510329	DRAWING LAMINATED GAS BOOSTER ELECTRIC BOX	1
2	CL018	CABLE BLACK 0.75mm²	18
3	DD360327-2	PRESSURE SWITCH DIN CAP	2
4	DD500342	CRIMP UNINSULATED 10mm²/8mm	16
5	DD500350	CONDUIT NYLON GREY 16mm OD	0.5M
6	DD500351	CONDUIT NYLON GREY 20mm OD	4M
7	DD500353	CONDUIT NYLON GREY 32mm OD	1M
8	DD500359	M50/M32 BRASS RED'N BUSH INCL. L/N	AS REQ
9	DD500360	CONNECTOR CONDUIT STRAIGHT NYLON GREY M16/16mm	1
10	DD500362	CONNECTOR CONDUIT STRAIGHT NYLON GREY M20/20mm	2
11	DD500364	CONNECTOR CONDUIT STRAIGHT NYLON GREY M32/32mm	2
12	DD500371	CONNECTOR CONDUIT ELBOW NYLON GREY M20/20mm	2
13	DD500384	LOCKNUT CONNECTOR CONDUIT ELBOW NYLON GREY 16mm	1
14	DD500385	LOCKNUT CONNECTOR CONDUIT ELBOW NYLON GREY 20mm	1
15	DD500391	CLIP MOUNTING CONDUIT NYLON GREY 20mm	4
16	DD500401	WASHER JOINT 20mm	2
17	E10483	CABLE10mm² TRI-RATED RED	12
18	E11604	CABLE 10mm² TRI-RATED GREEN/YELLOW	3
19	EM12713	CRIMP RING UNINSULATED 10mm²/M10	4
20	EM12715	CRIMP SPADE RED 1.5mm²/M5	10
21	EM12719	TRUNKING ROUND SLOTTED FLEXIBLE 30mm x 500mm LNTH	1
22	EM553	SLEEVE PROTECTIVE CONDUIT 16mm	1
23	EM562	FERRULE BOOTLACE 10mm²	10
24	EM569	ENCLOSURE IP54 56mm x 56mm x 40mm	1
25	EM570	TEE 20mm CONDUIT	2
26	EM7027	BUSH REDUCING BRASS PG36 x M32	AS REQ
27	KI17319	GLAND CABLE M20 390-050	4
28	EM12403	1ST STAGE B10510313 PRESSURE SWITCH	1
29	EM12405	2ND STAGE GE100 PRESSURE WITCH	1
30	B10510312	3WAY SOLENOID VALVE St/St	1
31	GE087	2WAY SOLENOID VALVE St/St	1
32	NOT JFD SUPPLY	TEMPERATURE SWITCH	2
33	NOT JFD SUPPLY	OIL PRESSURE SWITCH FITTED TO BOOSTER	1
34	EM39562	SWITCH, PRESSURE, 0.3 - 1.5 BAR, G1/4'', SUCO	1

NOTES:

MATERIAL N/A
FINISH N/A

ALL DIMENSIONS ARE IN mm (UOS)
ALL DIMENSIONS BEFORE PLATING (UOS)
REMOVE ALL SHARP EDGES AND BURRS

MACHINING TOLERANCE		FABRICATION TOLERANCE	
NO DECIMAL PLACE	±1.0	>0 <100	±0.5
ONE DECIMAL PLACE	±0.2	>100 <500	±1.5
TWO DECIMAL PLACE	±0.05	>500	±3.0
ANGULAR TOLERANCE	±0.5°		

DENOTES CHANGES MADE AT THIS REVISION

REV	DESCRIPTION	ECN	BY	DATE	AUTH.
R07	SEE SHEET 3	24333	CB	13/11/19	AB
R06	VOLTAGE UPDATED	21530	JR	02/11/17	AN
R05	SEE SHEET 3	18998	ZD	15/03/16	MH
R00	ISSUED FOR MANUFACTURE		GDB	18/06/08	JM

THIRD ANGLE PROJECTION

DO NOT SCALE DRAWING

JFD OWNS THE COPYRIGHT OF THIS DOCUMENT AND ANY DESIGN RIGHT HEREIN. IT IS SUPPLIED IN CONFIDENCE AND MUST NOT BE USED FOR ANY PURPOSE OTHER THAN THAT FOR WHICH IT IS SUPPLIED AND MUST NOT BE REPRODUCED WITHOUT PERMISSION IN WRITING FROM THE OWNERS.

TITLE: STARTER PANEL SCHEMATIC, GAS BOOSTER

DRAWING NO. B510105S2 | REV R07
PART NO. B10510303 | PRODUCT / PROJECT No. GASMIZER
SIZE A2 | SCALE (UOS) NTS | SHEET 2 OF 3

JFD WESTHILL
ENTERPRISE DRIVE,
WESTHILL, ABERDEEN,
AB32 6TQ, UK.
TEL: +44 (0)1224 740145
E: enquiries@jfdglobal.com
W: jfdglobal.com

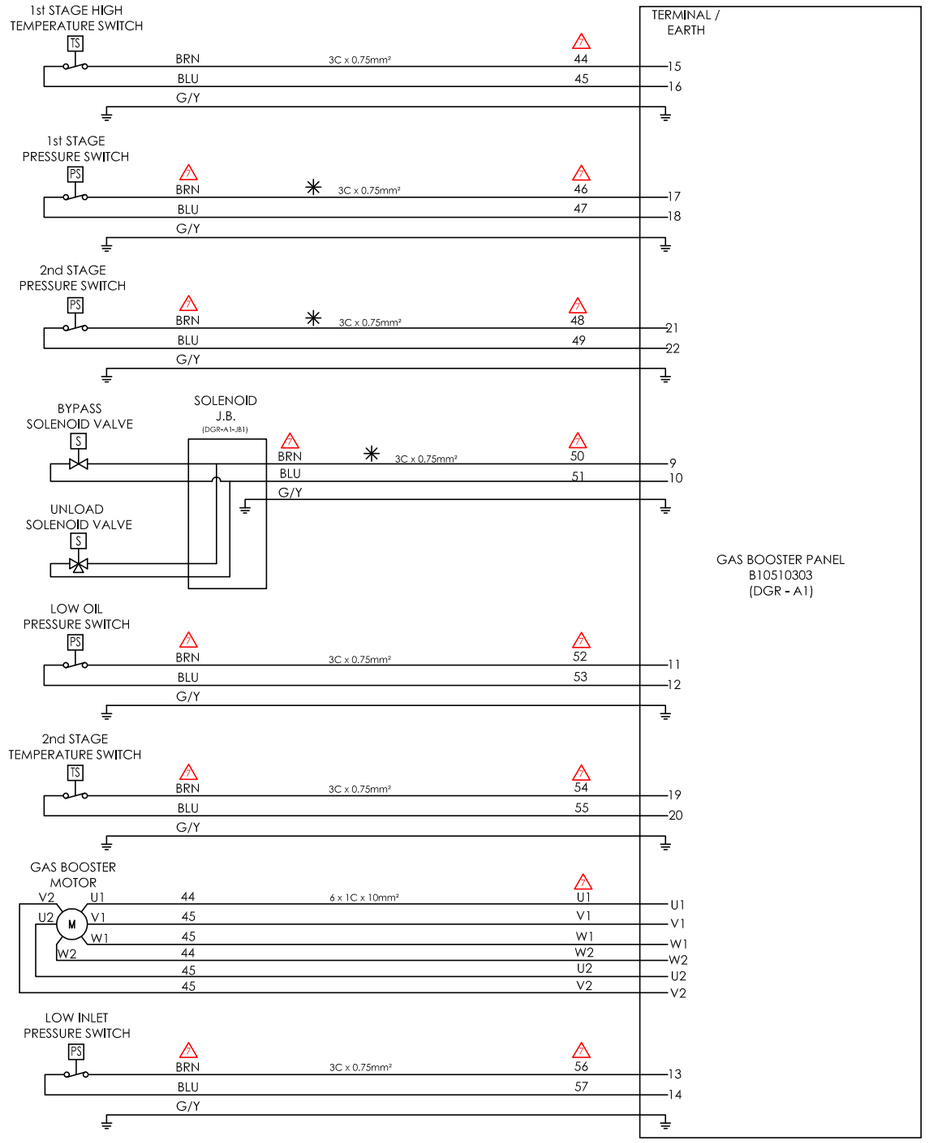

CABLE TYPE

3C x 0.75mm²
RUBBER INSULATED
TO IEC 60332 - 1

1 x 10mm² TRI - RATED
TO BS 6231 (UK)

✳ = CABLES ARE NOT RUN IN CONDUIT

NOTES:

MATERIAL	N/A
FINISH	N/A

ALL DIMENSIONS ARE IN mm (UOS)
ALL DIMENSIONS BEFORE PLATING (UOS)
REMOVE ALL SHARP EDGES AND BURRS

MACHINING TOLERANCE		FABRICATION TOLERANCE	
NO DECIMAL PLACE	±1.0	>0 <100	±0.5
ONE DECIMAL PLACE	±0.2	>100 <500	±1.5
TWO DECIMAL PLACE	±0.05	>500	±3.0
ANGULAR TOLERANCE	±0.5°		

△ DENOTES CHANGES MADE AT THIS REVISION

REV	DESCRIPTION	ECN	BY	DATE	AUTH.
R07	CORE NUMBERS ADDED	24333	CB	13/11/19	AB
R06	VOLTAGE UPDATED	21530	JR	02/11/17	AN
R05	SEE SHEET 3	18998	ZD	15/03/16	MH
R00	ISSUED FOR MANUFACTURE		GDB	18/06/08	JM

THIRD ANGLE PROJECTION

DO NOT SCALE DRAWING

JFD OWNS THE COPYRIGHT OF THIS DOCUMENT AND ANY DESIGN RIGHT HEREIN. IT IS SUPPLIED IN CONFIDENCE AND MUST NOT BE USED FOR ANY PURPOSE OTHER THAN THAT FOR WHICH IT IS SUPPLIED AND MUST NOT BE REPRODUCED WITHOUT PERMISSION IN WRITING FROM THE OWNERS.

TITLE: STARTER PANEL SCHEMATIC, GAS BOOSTER

DRAWING NO. B510105S3 | REV R07

PART NO. B10510303 | PRODUCT / PROJECT No. GASMIZER

SIZE A2 | SCALE (UOS) NTS | SHEET 3 OF 3

JFD WESTHILL
ENTERPRISE DRIVE,
WESTHILL, ABERDEEN,
AB32 6TQ, UK

TEL: +44 (0)1224 740145
E: enquiries@jfdglobal.com
W: jfdglobal.com

Belt Drive Tension Adjustment 81924S1

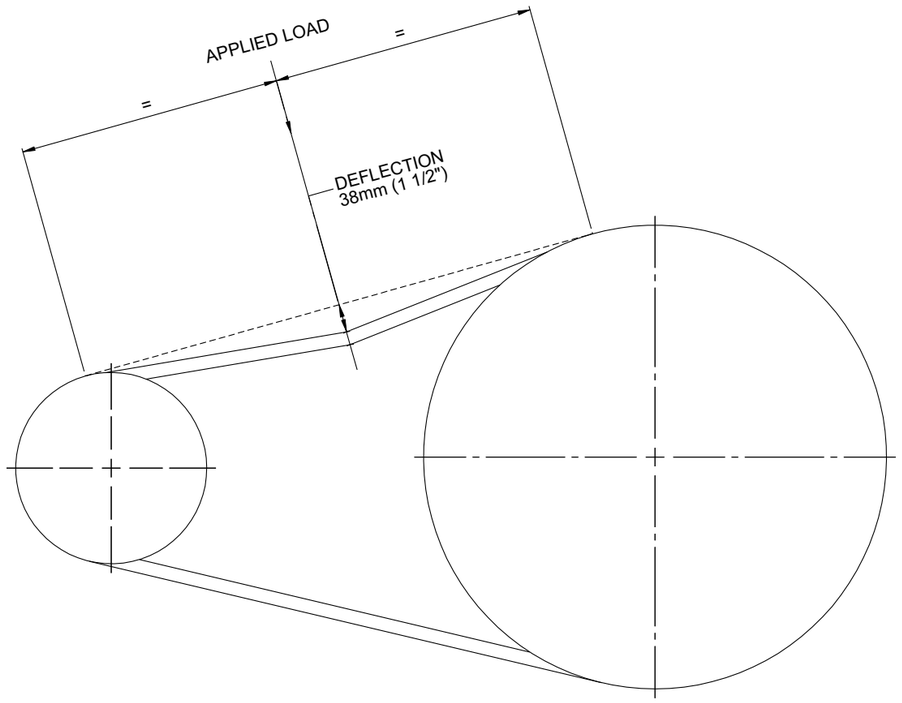

DIVEX OWNS THE COPYRIGHT OF THIS DOCUMENT AND ANY DESIGN RIGHT HEREIN. IT IS SUPPLIED IN CONFIDENCE AND MUST NOT BE USED FOR ANY PURPOSE OTHER THAN THAT FOR WHICH IT IS SUPPLIED AND MUST NOT BE REPRODUCED WITHOUT PERMISSION IN WRITING FROM THE OWNERS.

DRAWING STATUS BOX: R

KEY
- R RELEASED
- X CHECKED IN/OUT
- C FOR COMMENT
- IN PROGRESS

NOTES:

REV	DESCRIPTION	ECN No	BY	DATE
R05				
R04				
R03				
R02				
R01	RE-DRAWN TO SOLIDWORKS	10539	GC	01/05/08
R00	ISSUED FOR MANUFACTURE	N/A	IHY	08/11/87

IF STATUS IS NOT RELEASED THIS DRAWING IS NOT VALID FOR USE

DO NOT SCALE DRAWING

ALL DIMENSIONS SHOWN ARE IN MM (UOS)
ALL DIMENSIONS BEFORE PLATING (UOS)
REMOVE ALL SHARP EDGES AND BURRS

DIMENSIONAL TOLERANCES

MACHINING		FABRICATION	
NO DECIMAL PLACES	±1.0	SIZE >0 <100	±0.5
ONE DECIMAL PLACE	±0.2	SIZE >100 <500	±1.5
TWO DECIMAL PLACE	±0.05	SIZE >500	±3.0
ANGULAR TOLERANCE	±0.5°	ANGULAR TOLERANCE	±0.5°

MATERIAL: N/A

FINISH: N/A

THIRD ANGLE PROJECTION

TITLE: BELT DRIVE TENSION ADJUSTMENT

PART No.	DRAWING No.
N/A	81924S1

DRAWN BY	DATE	PRODUCT / PROJECT No.
I. YOUNG	08/11/1987	GASMIZER

SIZE	SCALE	SHT	OF	REV
A2	1:5	1	1	R01

DIVEX
DIVEX LIMITED
ENTERPRISE DRIVE
WESTHILL
ABERDEEN
AB32 6TQ
UNITED KINGDOM
Tel : +44(0)1224 740145
Fax : +44(0)1224 740172
email : info@divexglobal.com
www.divexglobal.com

P&ID, Volume Tank 10 Bottle Pack P1805908S1

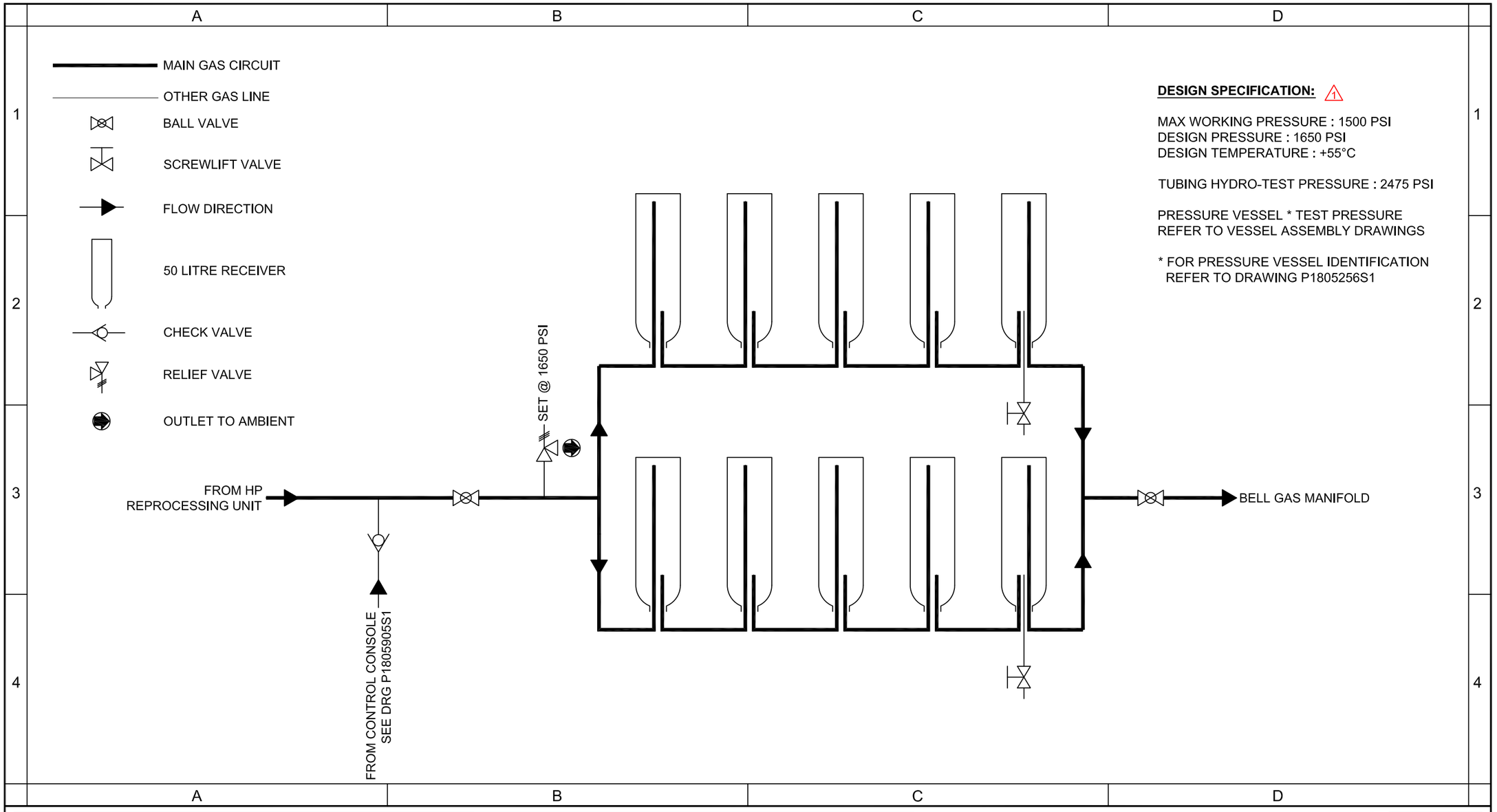

DIVEX OWNS THE COPYRIGHT OF THIS DOCUMENT AND ANY DESIGN RIGHT HEREIN. IT IS SUPPLIED IN CONFIDENCE AND MUST NOT BE USED FOR ANY PURPOSE OTHER THAN THAT FOR WHICH IT IS SUPPLIED AND MUST NOT BE REPRODUCED WITHOUT PERMISSION IN WRITING FROM THE OWNERS

NOTES
INPUTS AND OUTPUTS TO UNIT ARE ANNOTATED ASSUMING UNIT IS PART OF A CORRECTLY INSTALLED DIVEX GASMIZER SYSTEM.

1 DENOTES CHANGES MADE AT THIS REVISION

ALL DIMENSIONS SHOWN ARE IN MM (UOS)
ALL DIMENSIONS BEFORE PLATING (UOS)
REMOVE ALL SHARP EDGES AND BURRS

DIMENSIONAL TOLERANCES

MACHINING		FABRICATION	
NO DECIMAL PLACES	±1.0	SIZE >0 <100	±0.5
ONE DECIMAL PLACE	±0.2	SIZE >100 <500	±1.5
TWO DECIMAL PLACE	±0.05	SIZE >500	±3.0
ANGULAR TOLERANCE	±0.5°	ANGULAR TOLERANCE	±0.5°

MATERIAL: N/A

FINISH: N/A

THIRD ANGLE PROJECTION

REV	DESCRIPTION	ECN No	BY	DATE	AUTH. BY
R06					
R05					
R04					
R03					
R02					
R01	DESIGN SPEC. ADDED	19506	JR	24/05/16	AN
R00	ISSUED FOR MANUFACTURE		GC	11/12/08	RTW

DO NOT SCALE DRAWING

TITLE: PROCESS AND INSTRUMENTATION DIAGRAM, VOLUME TANK 10 BOTTLE PACK

DRAWING No. P1805906S1 | REV R01

PART No. N/A | PRODUCT / PROJECT No. P1805

SIZE A3 | SCALE NTS | SHT 1 OF 1

DIVEX
DIVEX LIMITED
ENTERPRISE DRIVE
WESTHILL
ABERDEEN
AB32 6TQ
UNITED KINGDOM
Tel : +44(0)1224 740145
Fax : +44(0)1224 740172
email : info@divexglobal.com
www.divexglobal.com

Pipework Schematic 10 Bottle Pack P1805265S1

ITEM NO.	DESCRIPTION	QTY.	MATERIAL	PART NO.	MWP
1	CYLINDER,HE02, C/W 5/8"BSP OUTLET VALVE,50L 200BAR	10	STEEL	DD340001-HEO2	200 BAR
2	FTG,BOT ADAPTOR,MIDDLE, 8 JIC	6	SEE 82288S1	G2288B	114 BAR
3	FITTING,BOTTLE OUTLET,10-BOTTLE PACK	4	SEE 82249S1	G22490	114 BAR
4	TUBE,STAINLESS STEEL, SEAMLESS, 1/2" OD X 0.049	6ft	316 SS	TM497	270 BAR
5	TEE, STREET, 1/2"NPT, SS, MWP310BAR	2	316 SS	FP487	310 BAR
6	ELBOW,STREET, 1/4"MNPT X 1/4"FNPT,PLATED	2	NP BRASS	NP204	224 BAR
7	ELBOW, 8JIC(M)-1/2"(M)NPT,ST.ST.	2	316 SS	FJ496	350 BAR
8	NIPPLE, RED, HEX, 3/8"MNPT-1/4"MNPT, SS, WP 500BAR	1	316 SS	FP397	496 BAR
9	VALVE,BALL,ASSY(REF VB397), 3/8"FNPT	2	316 SS	DM13540	206 BAR
10	FTG,ELBOW,MALE., 8JIC-3/8"MNPT	1	NP BRASS	NJ402	225 BAR
11	TEE,STREET, 3/8"M-F-FNPT, E/LESS NICKEL PLATE	2	NP BRASS	NP313	206 BAR
12	FTG,CONNECTOR,MALE., 8JIC-3/8"MNPT	1	NP BRASS	NJ401	225 BAR
13	FTG,ELBOW,MALE., 8JIC-1/4"MNPT	1	NP BRASS	NJ416	225 BAR
14	CAP, 8-JIC, BRASS, W/ RETAINING WIRE	3	NP BRASS	DM167A	N/A
15	VALVE,CHECK, 1/4" FNPT (O2 CLEANED)	1	BRASS	VC201	206 BAR
16	REDUCER,PIPE THREAD, 3/8"MNPT X 1/4"FNPT	1	NP BRASS	NP304	275 BAR
17	VALVE,RELIEF, NUPRO R3A, 1/4"NPTM, 1/4" TUBE	1	316 SS	VR293	384 BAR
18	SPRING,RELIEF VALVE, 1500-2250 PSI	1	SS	VM043	N/A
19	VALVE,SHUT OFF, 1/4" MNPT	2	316 SS	VS201	344 BAR
20	PLUG, HEX HEAD, 1/4"MNPT, SS, WP551BAR	2	316 SS	FP290	551 BAR
21	FERRULE, 8JIC,ST.ST.	18	316 SS	FJ491	N/A
22	NUT,8JIC,ST.ST.	18	316 SS	FJ492	N/A
23	CONNECTOR, MALE, 8-JIC-1/2"NPT(M), SS, MWP413BAR	2	316 SS	FJ493	350 BAR
24	TUBE,SEAMLESS, 3/8" OD X 0.064, SS 316	40ft	316 SS	TM399	470 BAR
25	NIPPLE,HEX, 1/2"(M)NPT-3/8"(M)NPT,ST.ST.	2	316 SS	FP499	455 BAR

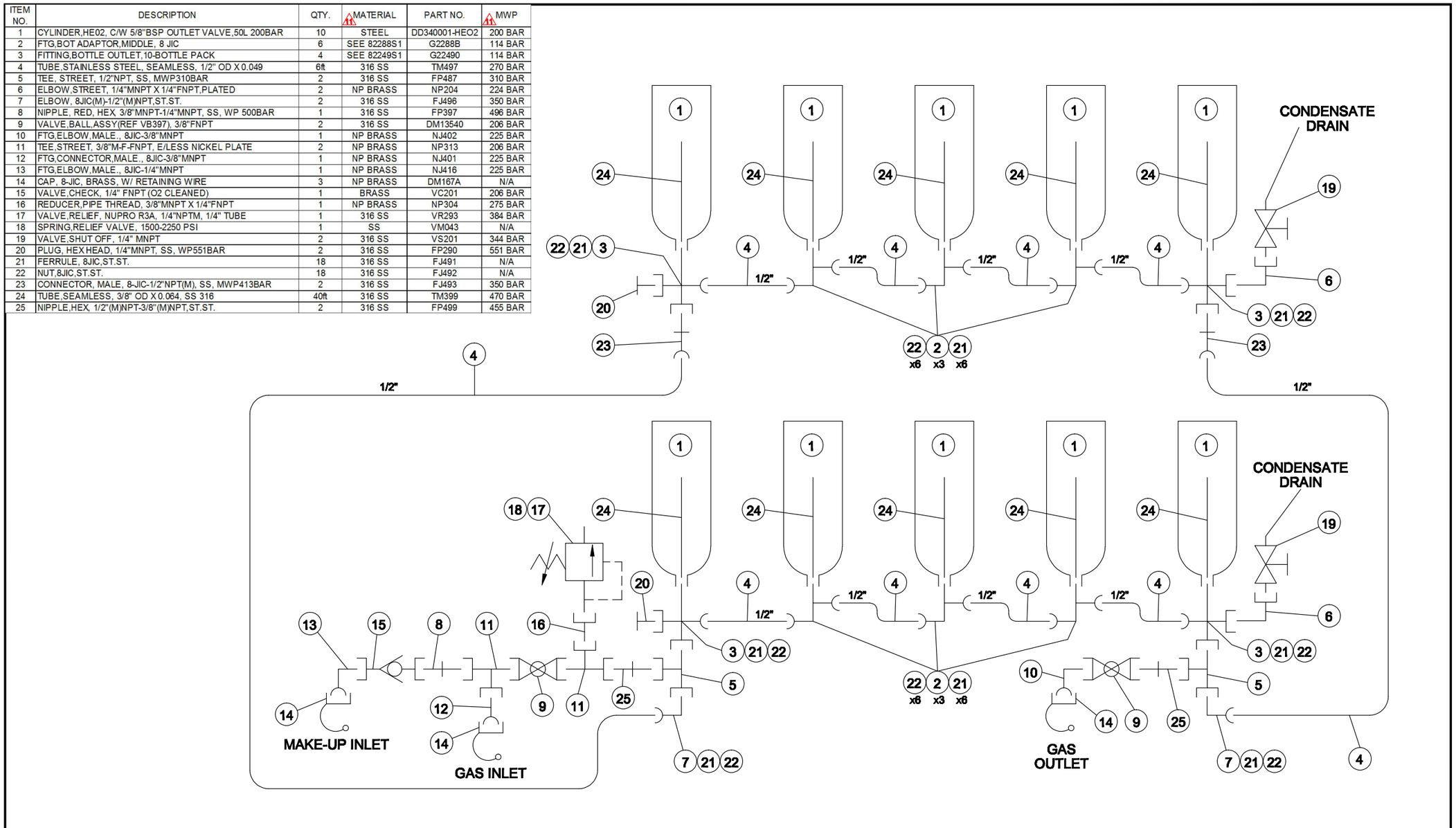

DIVEX OWNS THE COPYRIGHT OF THIS DOCUMENT AND ANY DESIGN RIGHT HEREIN. IT IS SUPPLIED IN CONFIDENCE AND MUST NOT BE USED FOR ANY PURPOSE OTHER THAN THAT FOR WHICH IT IS SUPPLIED AND MUST NOT BE REPRODUCED WITHOUT PERMISSION IN WRITING FROM THE OWNERS.

NOTES

ALL DIMENSIONS SHOWN ARE IN MM (UOS)
ALL DIMENSIONS BEFORE PLATING (UOS)
REMOVE ALL SHARP EDGES AND BURRS

DIMENSIONAL TOLERANCES

MACHINING		FABRICATION	
NO DECIMAL PLACES	±1.0	SIZE >0 <100	±0.5
ONE DECIMAL PLACE	±0.2	SIZE >100 <500	±1.5
TWO DECIMAL PLACE	±0.05	SIZE >500	±3.0
ANGULAR TOLERANCE	±0.5°	ANGULAR TOLERANCE	±0.5°

DENOTES CHANGES MADE AT THIS REVISION

MATERIAL: REFER TO PARTS LIST

FINISH: N/A

THIRD ANGLE PROJECTION

REV	DESCRIPTION	ECN No	BY	DATE	AUTH. BY
R11	MATERIAL AND MWP COLUMN ADDED TO PARTS LIST	17476	MJ	17/02/15	SC
R10	AITP, CALC & TEST CERT DATA ADDED TO PARTS LIST	10417	KB	18/04/08	RTW
R09	UPDATED, REFER TO ECN	10033	KB	17/01/08	JM
R00	ISSUED FOR MANUFACTURE		IHY	11/10/85	HS

DO NOT SCALE DRAWING

TITLE: PIPEWORK SCHEMATIC 10 BOTTLE PACK

DRAWING No. P1805265S1 | REV R11

PART No. C2297D | PRODUCT / PROJECT No. GASMIZER

SIZE A2 | SCALE NTS | SHT 1 OF 1

DIVEX
DIVEX LIMITED
ENTERPRISE DRIVE
WESTHILL
ABERDEEN
AB32 6TQ
UNITED KINGDOM
Tel : +44(0)1224 740145
Fax : +44(0)1224 740172
email : info@divexglobal.com
www.divexglobal.com